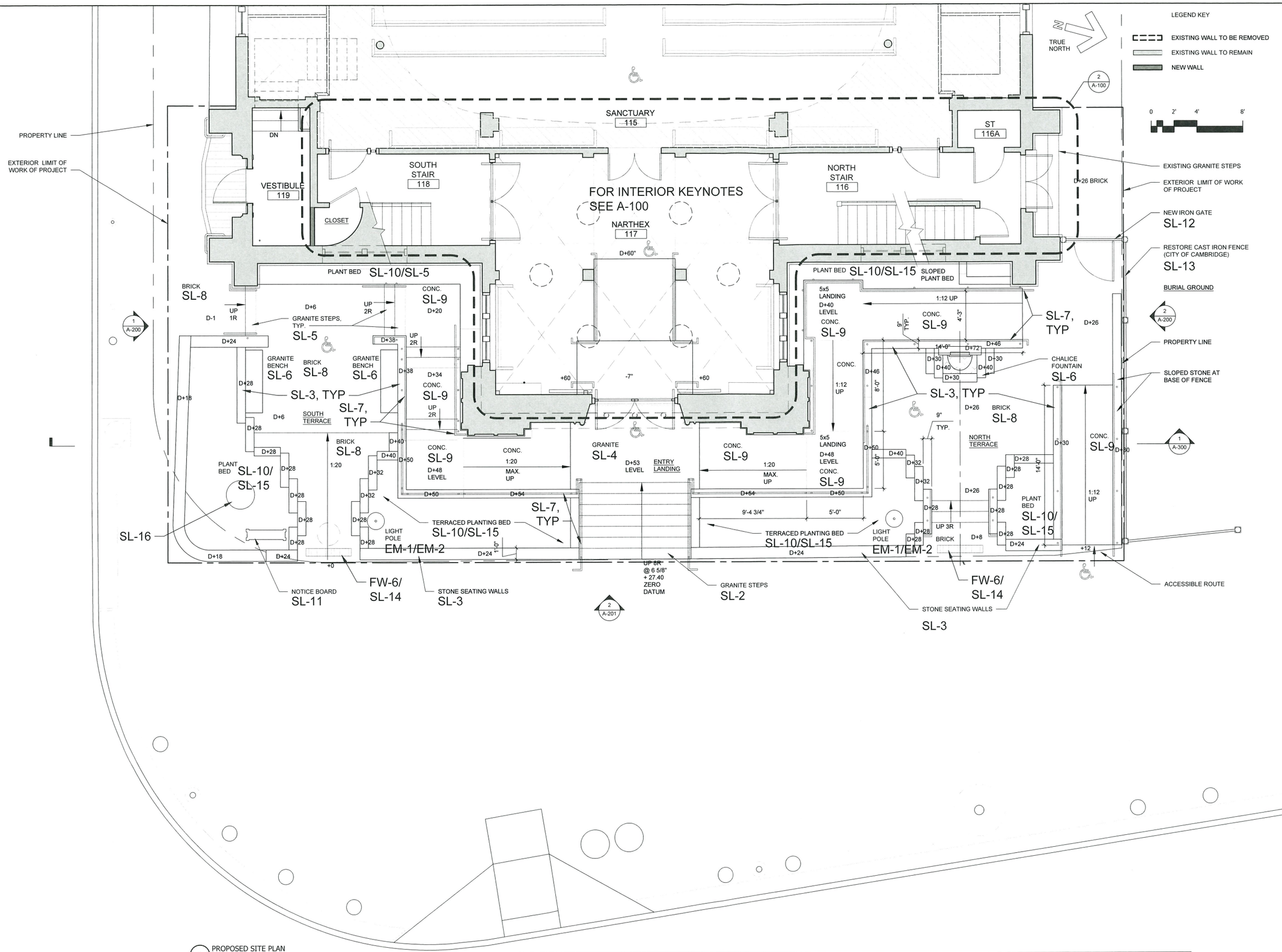

1 PROPOSED SITE PLAN
SCALE: 1/4"=1'-0"

TORREY ARCHITECTURE
75 Kneeland Street
Boston, MA 02111
617-227-1477
www.torreyarchitecture.com

STRUCTURAL ENGINEER
Structures North Consulting Engineers, Inc.
60 Washington Street, Suite 401
Salem, MA 01970
978-745-6817

STEEPLEJACK/ CONTRACTOR
American Steeple & Tower
373 Essex Street
Salem, MA 01970
978-744-7194

LANDSCAPE ARCHITECT
Weinmayr/Jay Assoc. Inc.
760 Main Street
Waltham, MA 02451

LIGHTING CONSULTANT
WSP USA
75 Arlington Street, 9th Fl
Boston, MA 02116

COST CONSULTANT
Ellana Construction Consultants
98 North Washington Street, Suite 109
Boston, MA 02114

No.	Description	Date
	MASS AVE WALL AND	
	TOWER PROJECT ESTIMATE SET	02/20/20
	REVISIONS	05/05/20
	REPORT	06/12/20

FIRST PARISH CAMBRIDGE, MA

SITE PLAN/ NARTHEX PLAN

Project number	1802
Date	06-12-2020
Drawn by	DM
Checked by	DT

A-001A

Scale AS NOTED

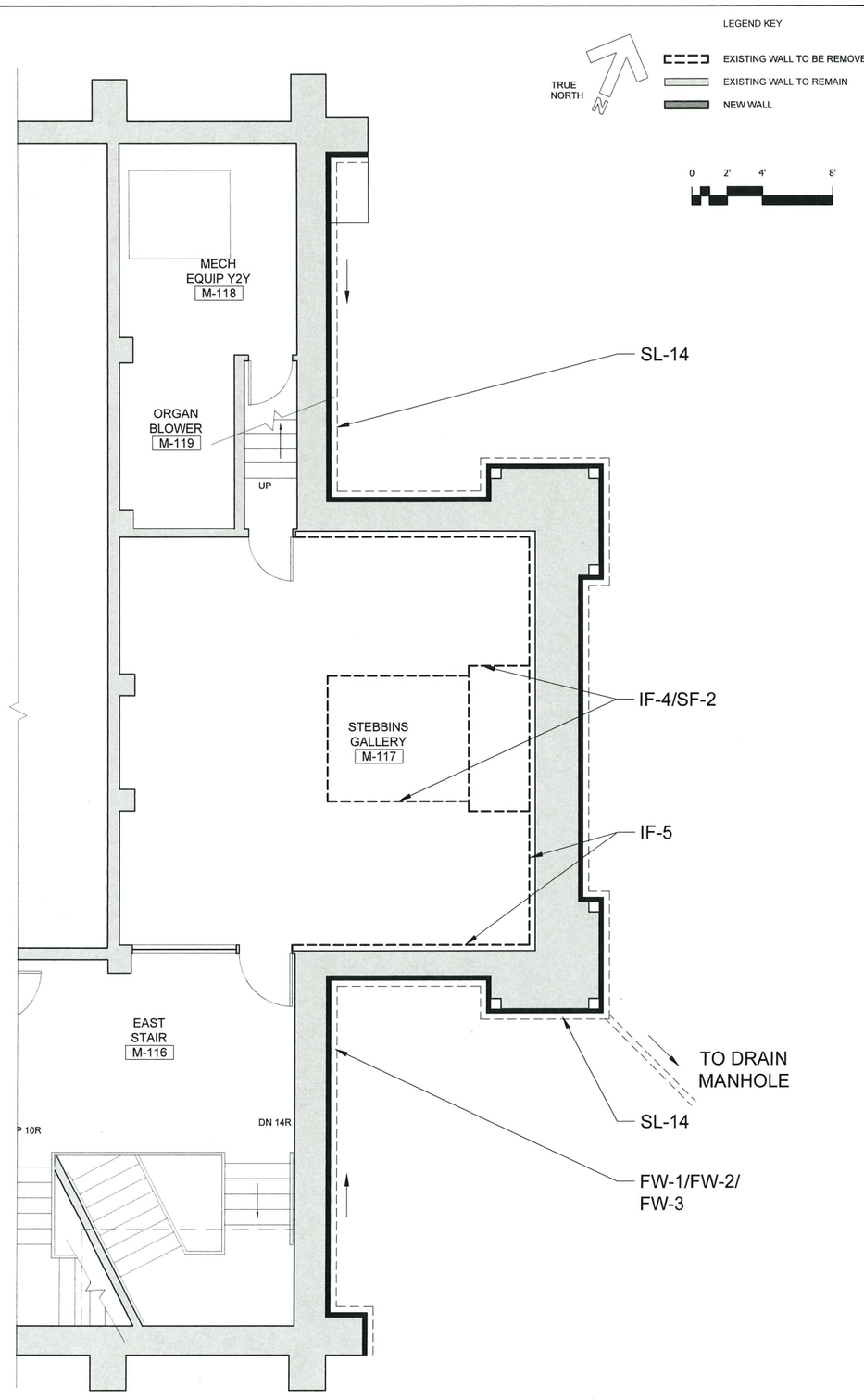

1 MEZZANINE LEVEL FLOOR PLAN
SCALE: 1/4"=1'-0"

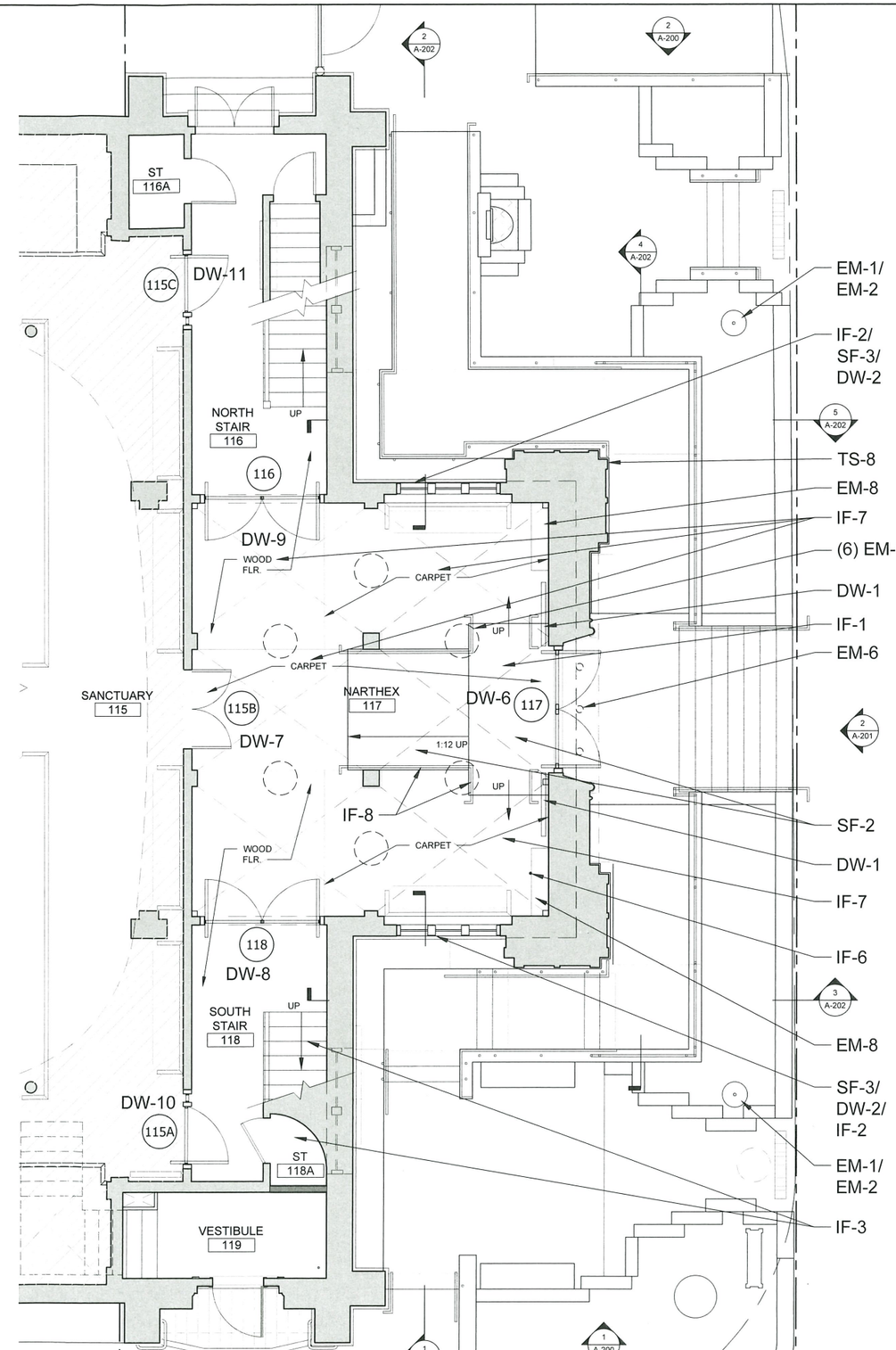

2 NARTHEX LEVEL FLOOR PLAN
SCALE: 1/4"=1'-0"

TORREY ARCHITECTURE

75 Kneeland Street
Boston, MA 02111
617-227-1477
www.torreyarchitecture.com

STRUCTURAL ENGINEER
Structures North Consulting Engineers, Inc.
60 Washington Street, Suite 401
Salem, MA 01970
978-745-6817

STEEPLEJACK/ CONTRACTOR
American Steeple & Tower
373 Essex Street
Salem, MA 01970
978-744-7194

LANDSCAPE ARCHITECT
Weinmayr/Jay Assoc. Inc.
760 Main Street
Waltham, MA 02451

LIGHTING CONSULTANT
WSP USA
75 Arlington Street, 9th Fl
Boston, MA 02116

COST CONSULTANT
Eliana Construction Consultants
98 North Washington Street, Suite 109
Boston, MA 02114

No.	Description	Date
	MASS AVE WALL AND	
	TOWER PROJECT ESTIMATE SET	02/20/20
	REVISIONS	05/05/20
	REPORT	06/12/20

FIRST PARISH CAMBRIDGE, MA

MEZZANINE AND NARTHEX FLOOR PLAN

Project number	1802
Date	06-12-2020
Drawn by	DM
Checked by	DT

A-100

Scale	AS NOTED

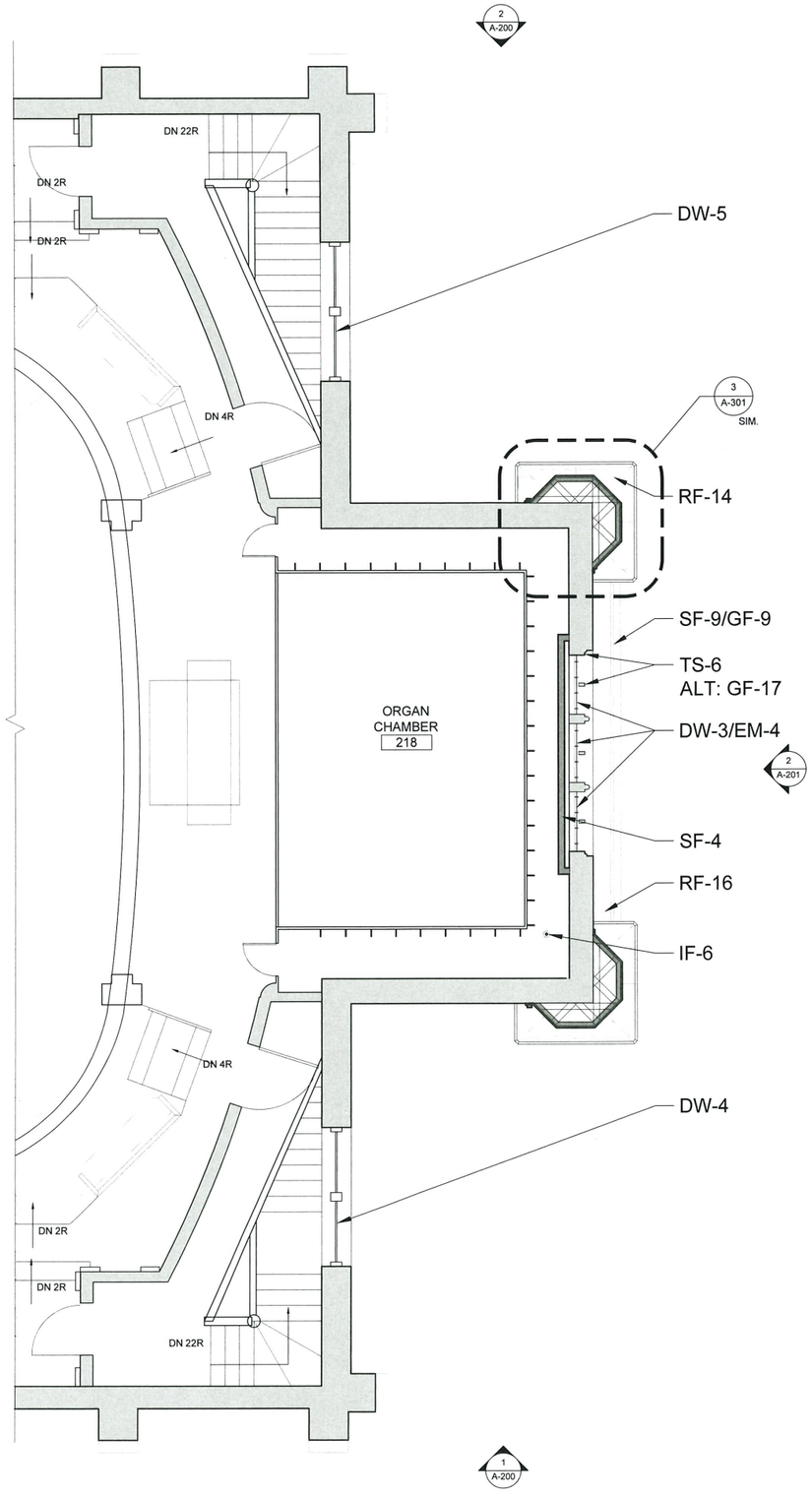

1 BALCONY LEVEL FLOOR PLAN
SCALE: 1/4"=1'-0"

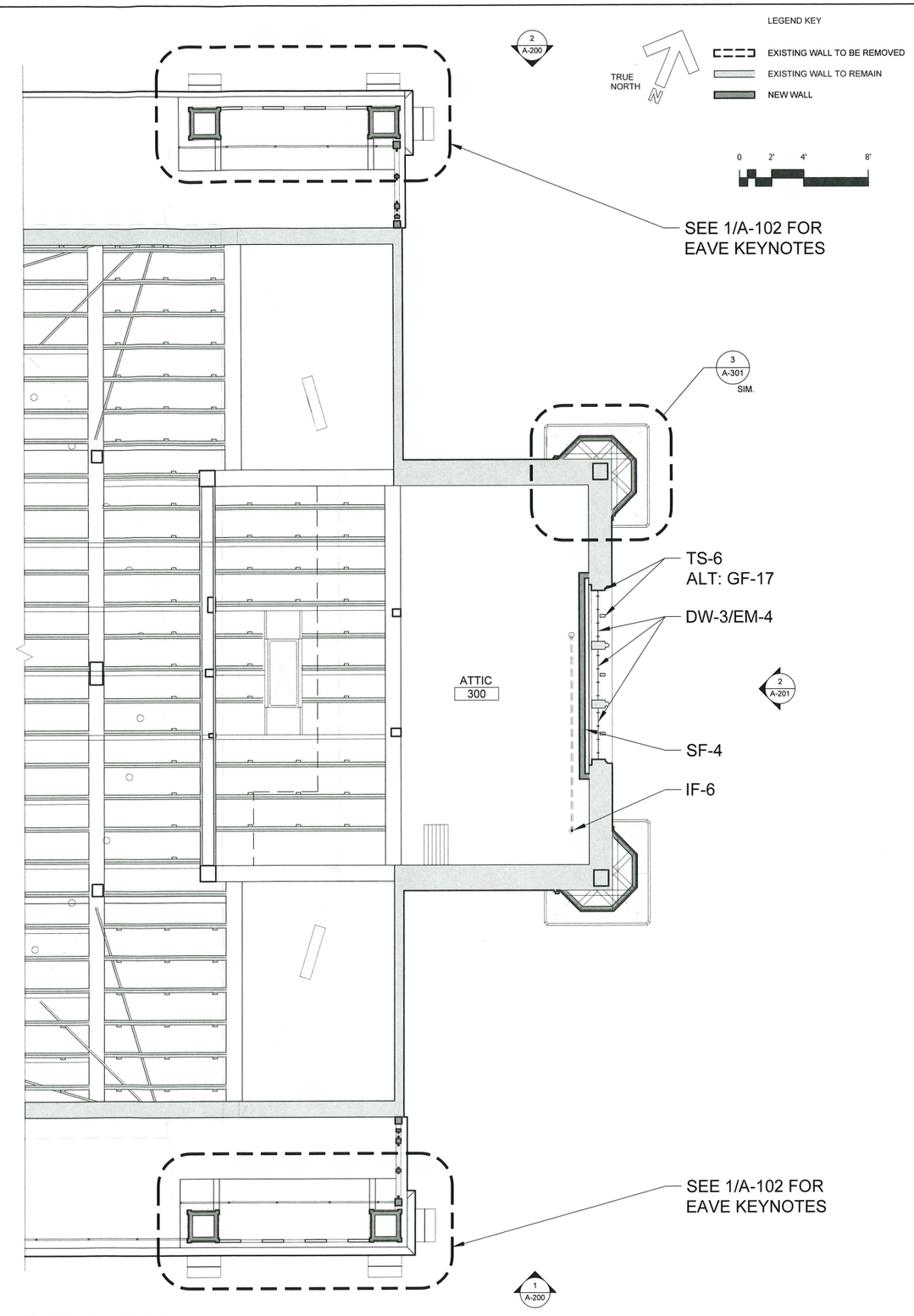

2 ATTIC LEVEL FLOOR PLAN
SCALE: 1/4"=1'-0"

TORREY ARCHITECTURE
75 Kneeland Street
Boston, MA 02111
617-227-1477
www.torreyarchitecture.com

STRUCTURAL ENGINEER
Structures North Consulting Engineers, Inc.
60 Washington Street, Suite 401
Salem, MA 01970
978-745-6817

STEEPLEJACK/ CONTRACTOR
American Steeple & Tower
373 Essex Street
Salem, MA 01970
978-744-7194

LANDSCAPE ARCHITECT
Weinmayr/Jay Assoc. Inc.
760 Main Street
Waltham, MA 02451

LIGHTING CONSULTANT
WSP USA
75 Arlington Street, 9th Fl
Boston, MA 02116

COST CONSULTANT
Ellana Construction Consultants
98 North Washington Street, Suite 109
Boston, MA 02114

No.	Description	Date
	MASS AVE WALL AND	
	TOWER PROJECT ESTIMATE SET	02/20/20
	REVISIONS	05/05/20
	REPORT	06/12/20

FIRST PARISH CAMBRIDGE, MA

BALCONY LEVEL AND ATTIC FLOOR PLAN

Project number	1802
Date	06-12-2020
Drawn by	DM
Checked by	DT

A-101

Scale AS NOTED

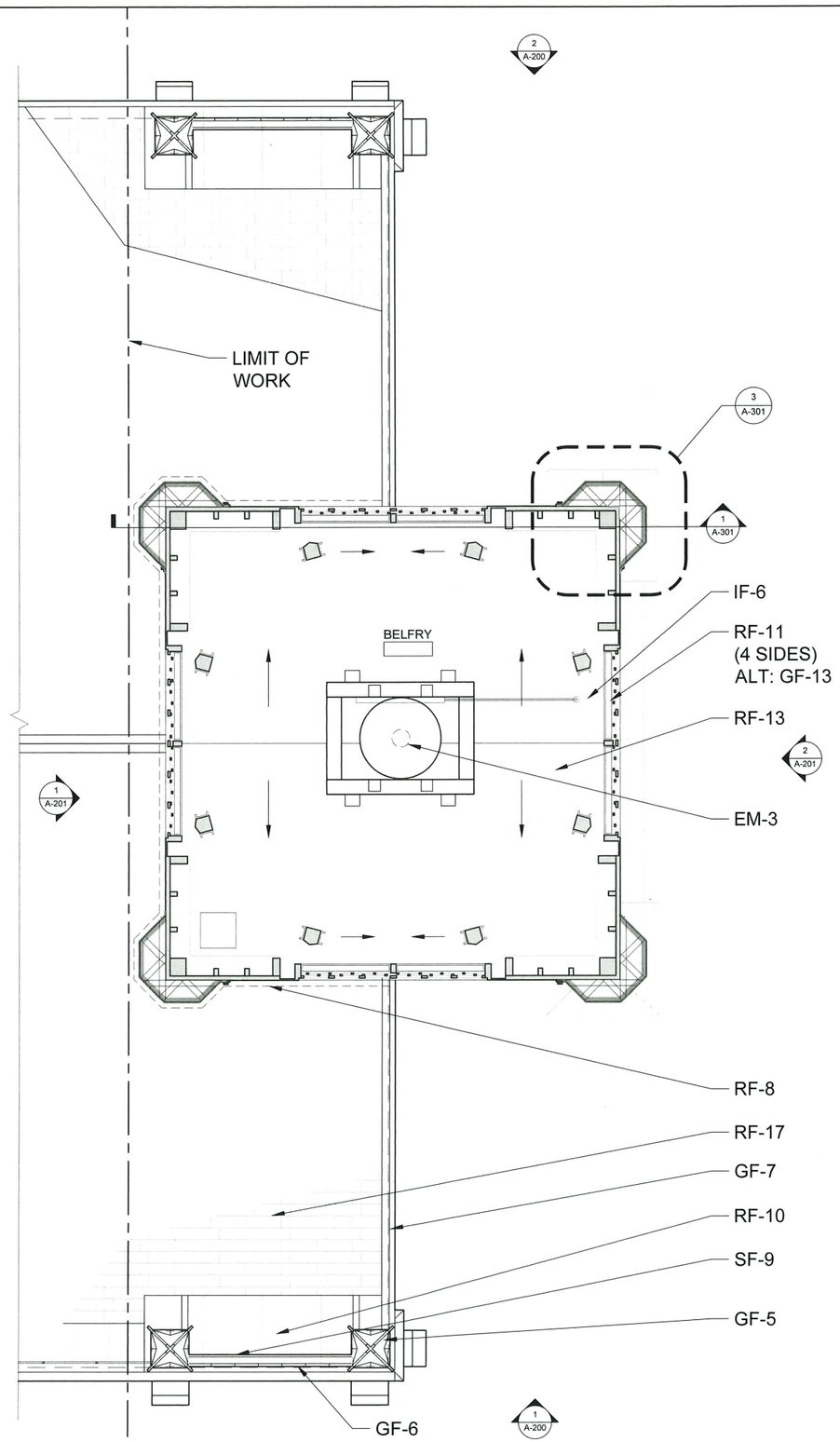

1 BELFRY LEVEL FLOOR PLAN
SCALE: 1/4"=1'-0"

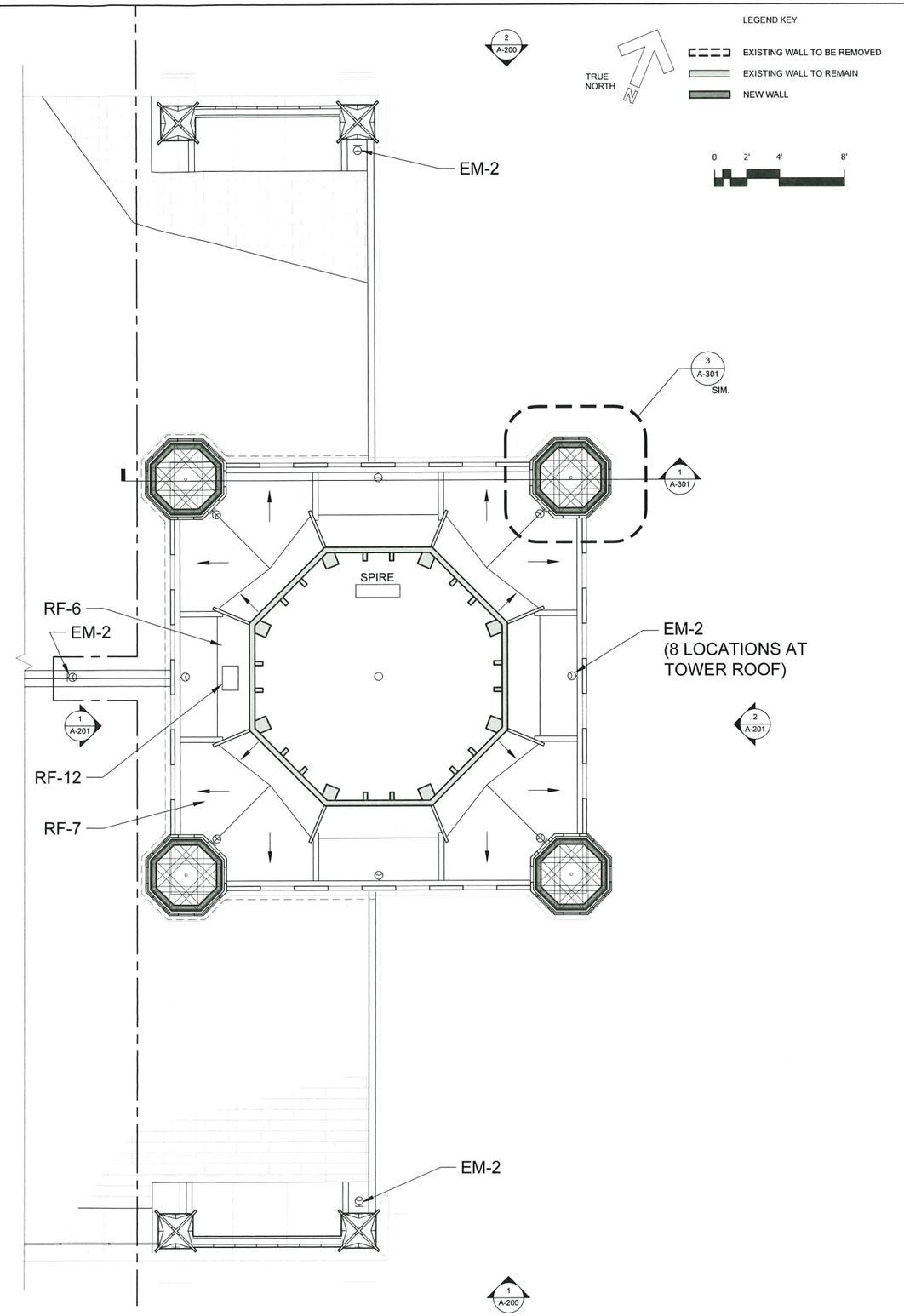

2 TOWER ROOF LEVEL PLAN
SCALE: 1/4"=1'-0"

TORREY ARCHITECTURE
75 Kneeland Street
Boston, MA 02111
617-227-1477
www.torreyarchitecture.com

STRUCTURAL ENGINEER
Structures North Consulting Engineers, Inc.
60 Washington Street, Suite 401
Salem, MA 01970
978-745-6817

STEEPLEJACK/ CONTRACTOR
American Steeple & Tower
373 Essex Street
Salem, MA 01970
978-744-7194

LANDSCAPE ARCHITECT
Weinmayr/Jay Assoc. Inc.
760 Main Street
Waltham, MA 02451

LIGHTING CONSULTANT
WSP USA
75 Arlington Street, 9th Fl
Boston, MA 02116

COST CONSULTANT
Eliana Construction Consultants
98 North Washington Street, Suite 109
Boston, MA 02114

No.	Description	Date
	MASS AVE WALL AND	
	TOWER PROJECT ESTIMATE SET	02/20/20
	REVISIONS	05/05/20
	REPORT	06/12/20

FIRST PARISH CAMBRIDGE, MA

BELFRY AND ATTIC TOWER PLAN

Project number	1802
Date	06-12-2020
Drawn by	DM
Checked by	DT

A-102

Scale AS NOTED

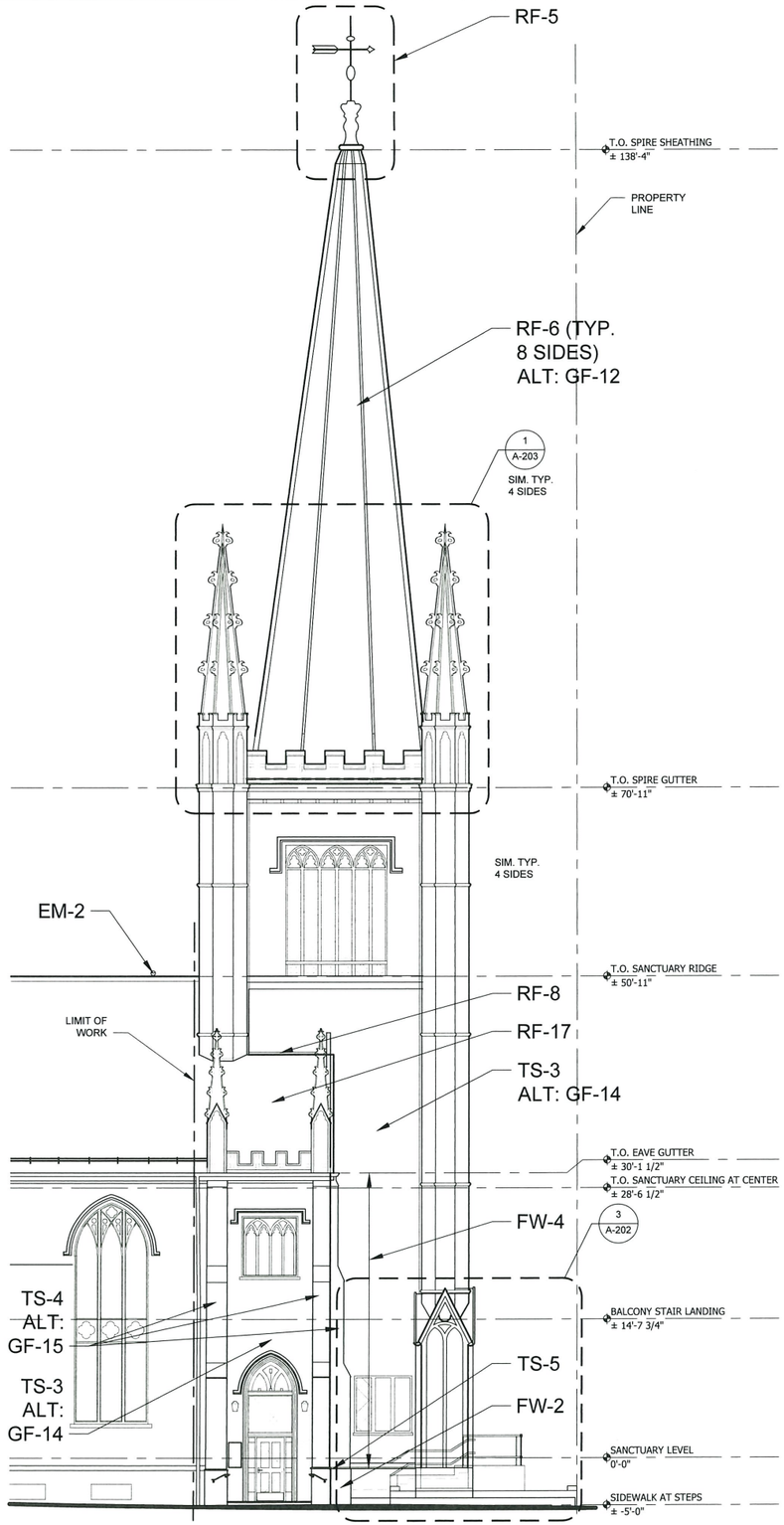

1 SOUTH EXTERIOR ELEVATION
SCALE: 1/8"=1'-0"

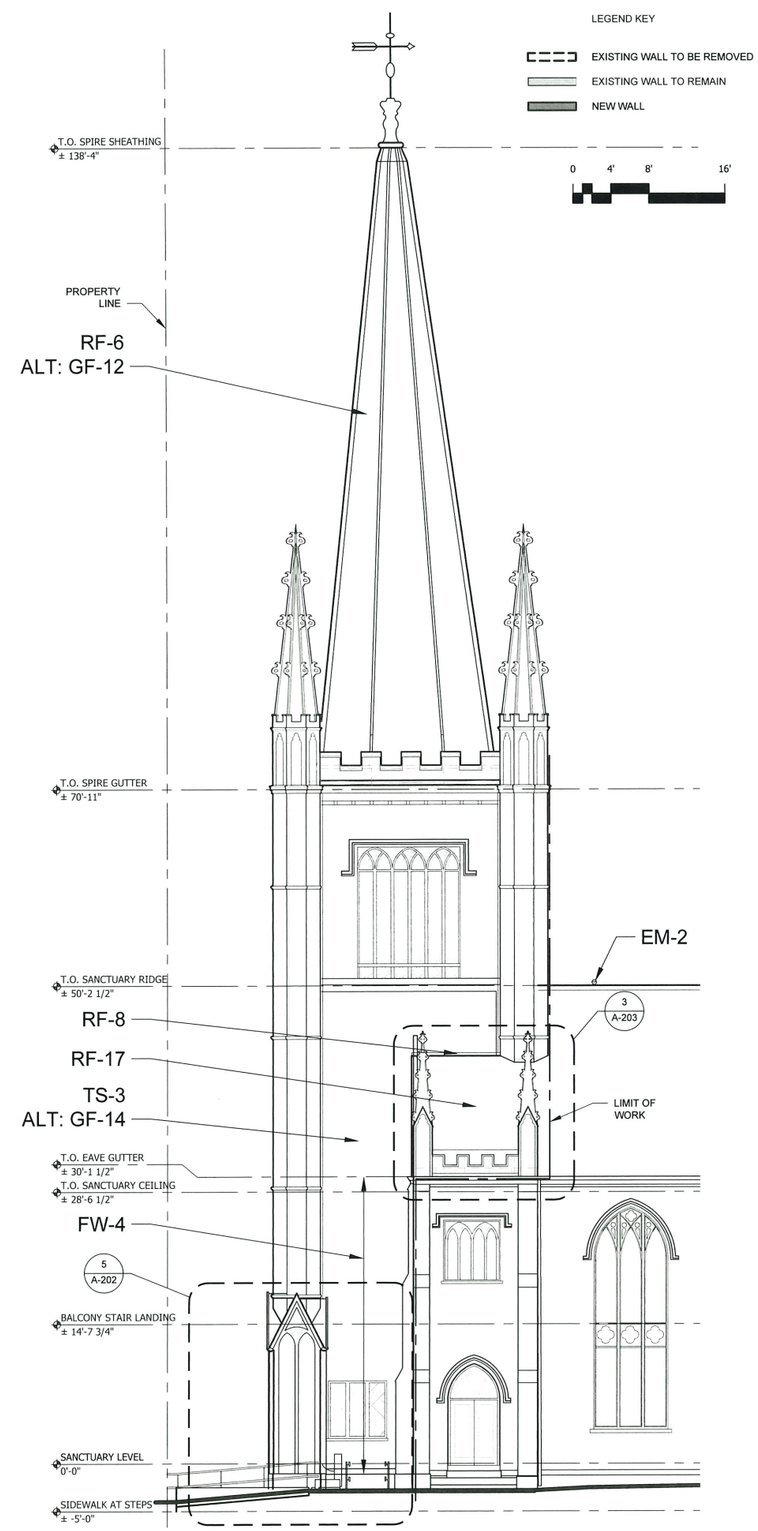

2 NORTH EXTERIOR ELEVATION
SCALE: 1/8"=1'-0"

TORREY ARCHITECTURE
75 Kneeland Street
Boston, MA 02111
617-227-1477
www.torreyarchitecture.com

STRUCTURAL ENGINEER
Structures North Consulting Engineers, Inc.
60 Washington Street, Suite 401
Salem, MA 01970
978-745-6817

STEEPLEJACK/ CONTRACTOR
American Steeple & Tower
373 Essex Street
Salem, MA 01970
978-744-7194

LANDSCAPE ARCHITECT
Weinmayr/Jay Assoc. Inc.
760 Main Street
Waltham, MA 02451

LIGHTING CONSULTANT
WSP USA
75 Arlington Street, 9th Fl
Boston, MA 02116

COST CONSULTANT
Ellana Construction Consultants
98 North Washington Street, Suite 109
Boston, MA 02114

No.	Description	Date
	MASS AVE WALL AND	
	TOWER PROJECT ESTIMATE SET	02/20/20
	REVISIONS	05/05/20
	REPORT	06/12/20

FIRST PARISH CAMBRIDGE, MA

EXTERIOR ELEVATIONS

Project number	1802
Date	06-12-2020
Drawn by	DM
Checked by	DT

A-200

Scale AS NOTED

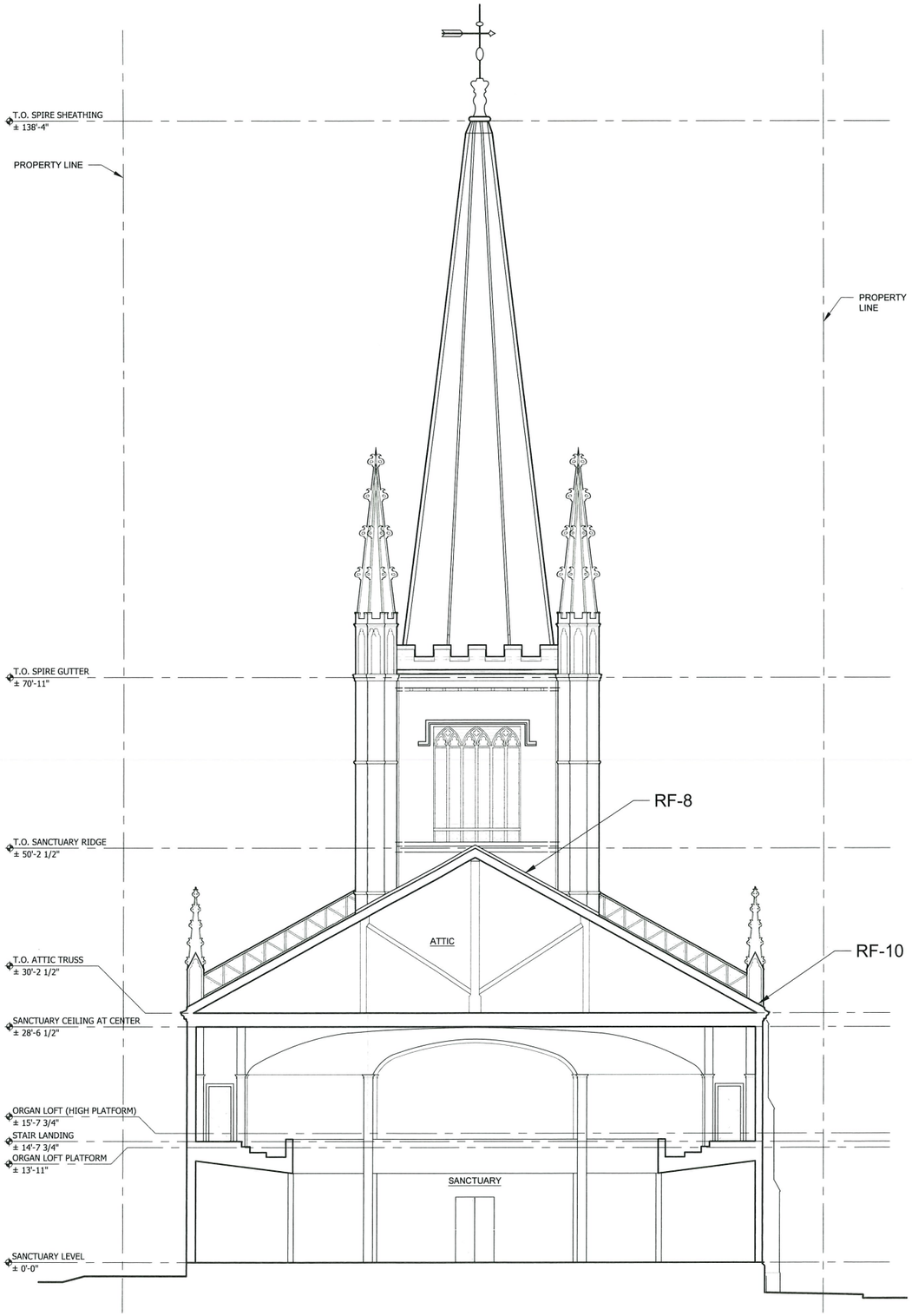

1 WEST EXTERIOR ELEVATION
SCALE: 1/8"=1'-0"

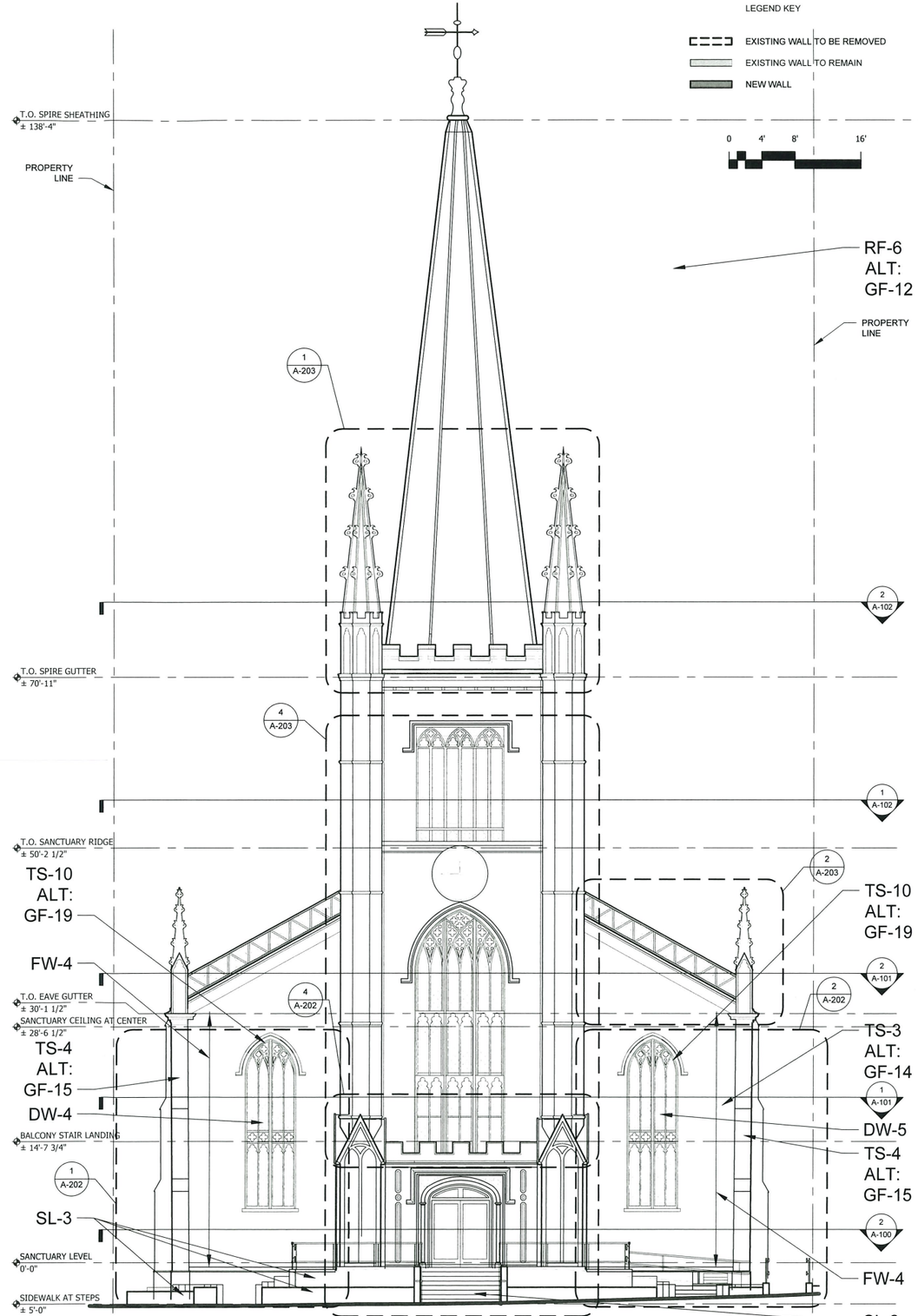

2 EAST EXTERIOR ELEVATION
SCALE: 1/8"=1'-0"

TORREY ARCHITECTURE
75 Kneeland Street
Boston, MA 02111
617-227-1477
www.torreyarchitecture.com

STRUCTURAL ENGINEER
Structures North Consulting Engineers, Inc.
60 Washington Street, Suite 401
Salem, MA 01970
978-745-6817

STEEPLEJACK/ CONTRACTOR
American Steeple & Tower
373 Essex Street
Salem, MA 01970
978-744-7194

LANDSCAPE ARCHITECT
Weinmayr/Jay Assoc. Inc.
760 Main Street
Waltham, MA 02451

LIGHTING CONSULTANT
WSP USA
75 Arlington Street, 9th Fl
Boston, MA 02116

COST CONSULTANT
Ellana Construction Consultants
98 North Washington Street, Suite 109
Boston, MA 02114

No.	Description	Date
	MASS AVE WALL AND	
	TOWER PROJECT ESTIMATE SET	02/20/20
	REVISIONS	05/05/20
	REPORT	06/12/20

FIRST PARISH CAMBRIDGE, MA

EXTERIOR ELEVATIONS

Project number	1802
Date	06-12-2020
Drawn by	DM
Checked by	DT

A-201

Scale AS NOTED

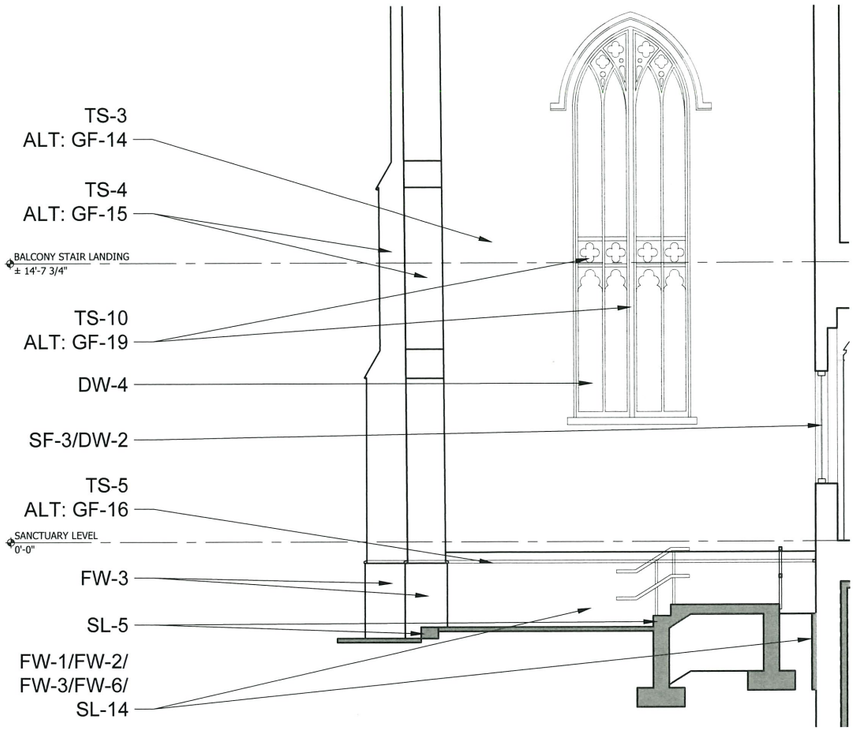

1 EAST ELEVATION EXCERPT AT ENTRY LEVEL (SOUTH SIDE)
SCALE: 1/4"=1'-0"

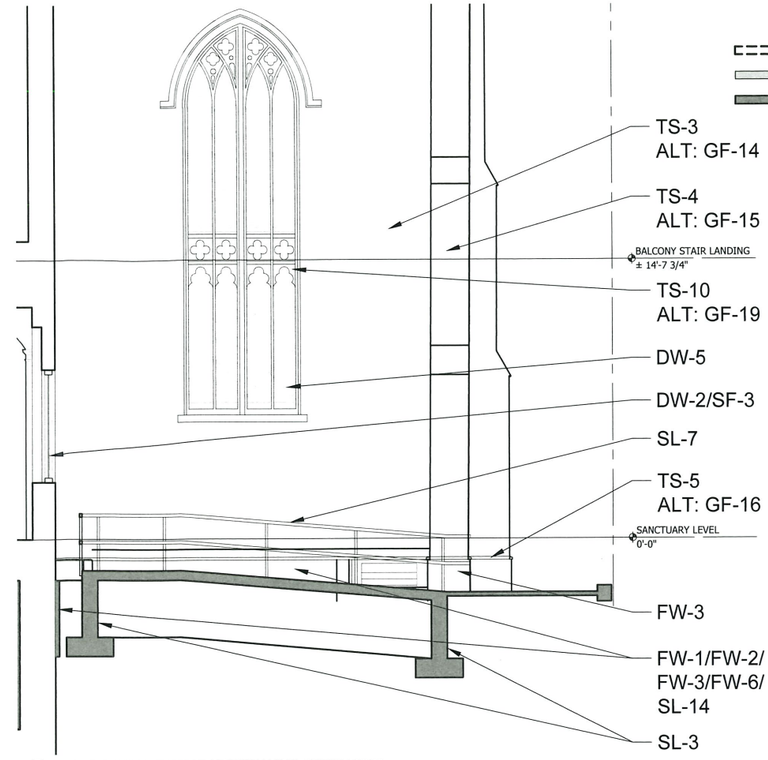

2 EAST ELEVATION EXCERPT AT ENTRY LEVEL (NORTH SIDE)
SCALE: 1/4"=1'-0"

LEGEND KEY

- EXISTING WALL TO BE REMOVED
- EXISTING WALL TO REMAIN
- NEW WALL

0 2' 4' 8'

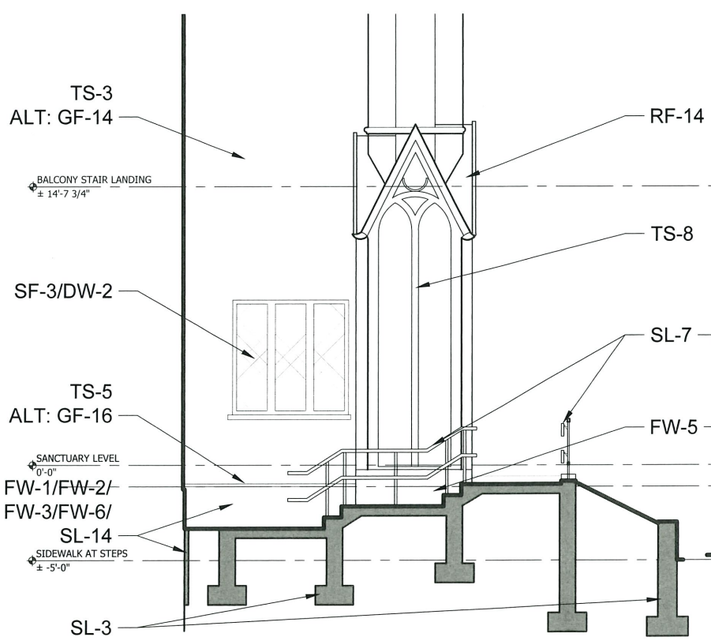

3 TOWER SOUTH ELEVATION EXCERPT AT ENTRY LEVEL
SCALE: 1/4"=1'-0"

4 TOWER EAST ELEVATION EXCERPT AT ENTRY LEVEL
SCALE: 1/4"=1'-0"

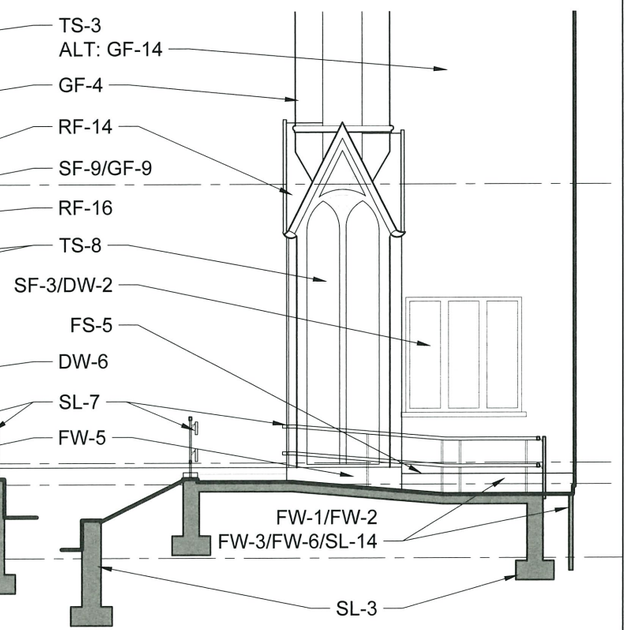

5 TOWER NORTH ELEVATION EXCERPT AT ENTRY LEVEL
SCALE: 1/4"=1'-0"

TORREY ARCHITECTURE
75 Kneeland Street
Boston, MA 02111
617-227-1477
www.torreyarchitecture.com

STRUCTURAL ENGINEER
Structures North Consulting Engineers, Inc.
60 Washington Street, Suite 401
Salem, MA 01970
978-745-6817

STEEPLEJACK/ CONTRACTOR
American Steeple & Tower
373 Essex Street
Salem, MA 01970
978-744-7194

LANDSCAPE ARCHITECT
Weinmayr/Jay Assoc. Inc.
760 Main Street
Waltham, MA 02451

LIGHTING CONSULTANT
WSP USA
75 Arlington Street, 9th Fl
Boston, MA 02116

COST CONSULTANT
Ellana Construction Consultants
98 North Washington Street, Suite 109
Boston, MA 02114

No.	Description	Date
	MASS AVE WALL AND	
	TOWER PROJECT ESTIMATE SET	02/20/20
	REVISIONS	05/05/20
	REPORT	06/12/20

FIRST PARISH CAMBRIDGE, MA

RESTORATION ELEVATIONS

Project number	1802
Date	06-12-2020
Drawn by	DM
Checked by	DT

A-202

Scale AS NOTED

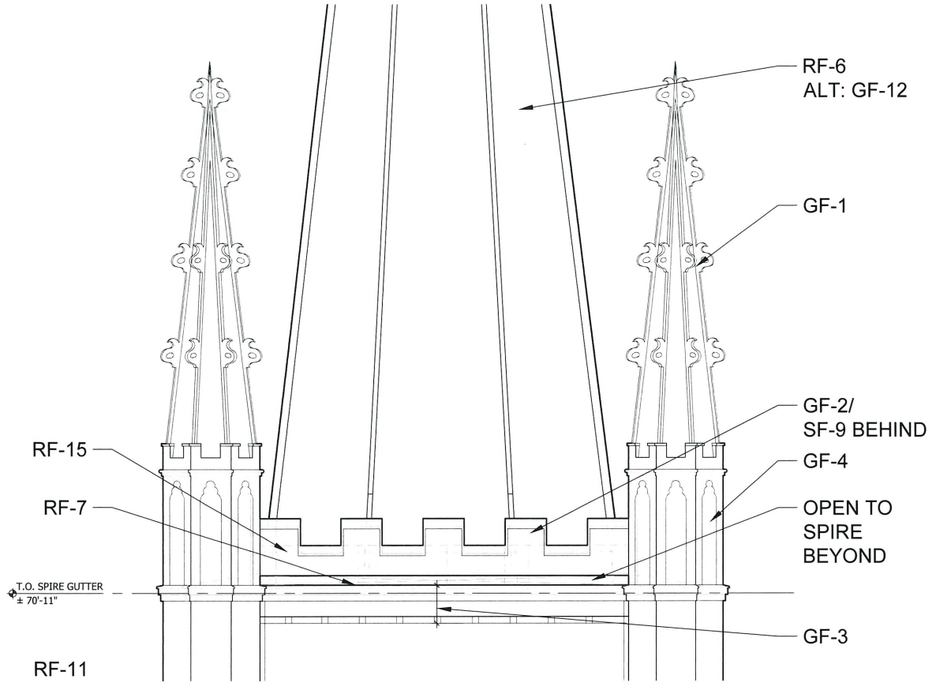

1 TOWER EAST ELEVATION EXCERPT AT ROOF LEVEL (4 SIDES SIMILAR)
SCALE: 1/4"=1'-0"

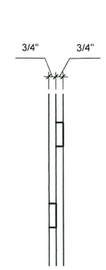

5A GF-11 SECTION DETAIL
SCALE: 1 1/2"=1'-0"

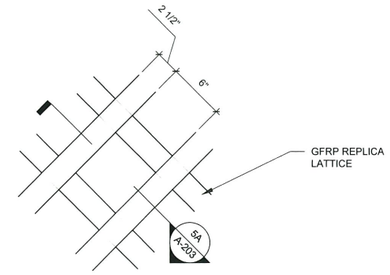

5B GF-11 ELEVATION DETAIL
SCALE: 1 1/2"=1'-0"

LEGEND KEY

- EXISTING WALL TO BE REMOVED
- EXISTING WALL TO REMAIN
- NEW WALL

0 2' 4' 8'

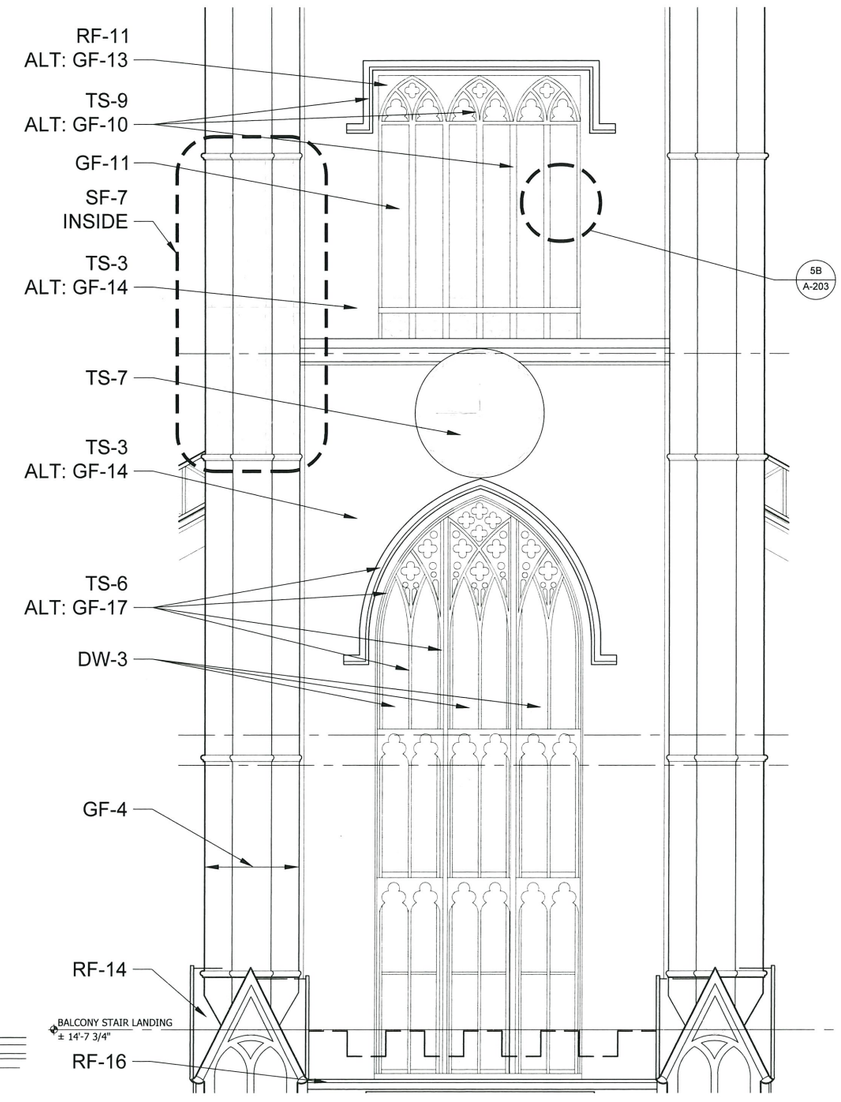

4 EAST ELEVATION AT BELFRY, CLOCK AND LANCET WINDOW
SCALE: 1/4"=1'-0"

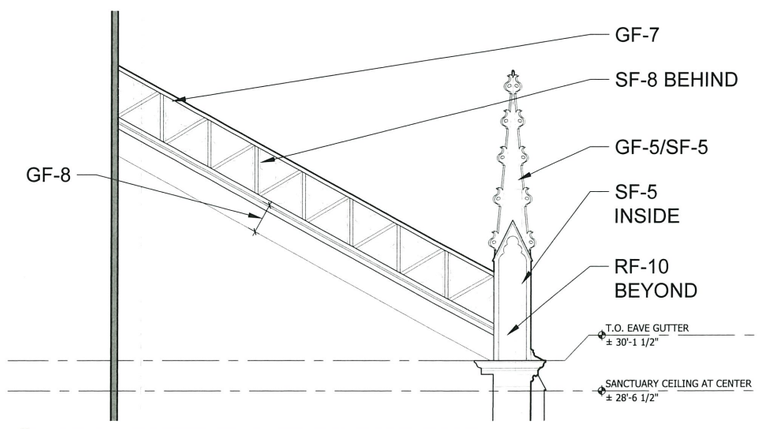

2 SANCTUARY ROOF EAST ELEVATION AT NORTH SIDE RAKE (SOUTH SIDE SIMILAR)
SCALE: 1/4"=1'-0"

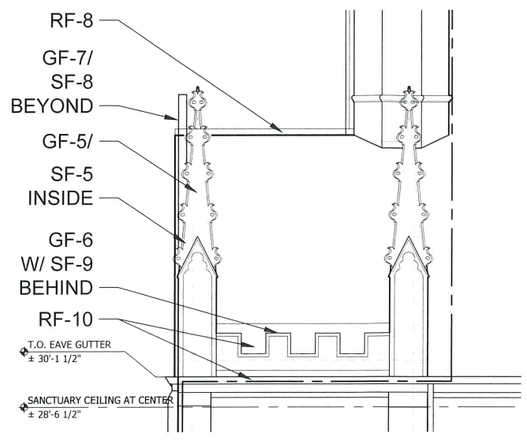

3 SANCTUARY ROOF NORTH ELEVATION AT EAST EAVE (SOUTH SIDE SIMILAR)
SCALE: 1/4"=1'-0"

TORREY ARCHITECTURE
75 Kneeland Street
Boston, MA 02111
617-227-1477
www.torreyarchitecture.com

STRUCTURAL ENGINEER
Structures North Consulting Engineers, Inc.
60 Washington Street, Suite 401
Salem, MA 01970
978-745-6817

STEEPLEJACK/ CONTRACTOR
American Steeple & Tower
373 Essex Street
Salem, MA 01970
978-744-7194

LANDSCAPE ARCHITECT
Weinmayr/Jay Assoc. Inc.
760 Main Street
Waltham, MA 02451

LIGHTING CONSULTANT
WSP USA
75 Arlington Street, 9th Fl
Boston, MA 02116

COST CONSULTANT
Ellana Construction Consultants
98 North Washington Street, Suite 109
Boston, MA 02114

No.	Description	Date
	MASS AVE WALL AND	
	TOWER PROJECT ESTIMATE SET	02/20/20
	REVISIONS	05/05/20
	REPORT	06/12/20

FIRST PARISH CAMBRIDGE, MA

RESTORATION ELEVATIONS

Project number	1802
Date	06-12-2020
Drawn by	DM
Checked by	DT

A-203

Scale AS NOTED

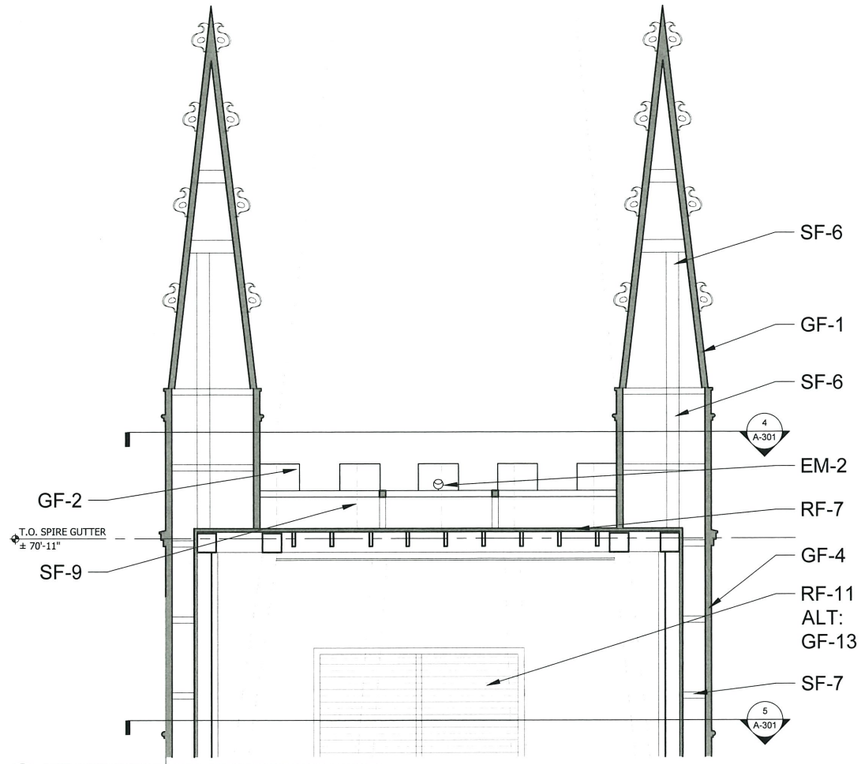

1 EAST-WEST SECTION DETAIL AT TOWER PYLONS/PINNACLES
SCALE: 1/4"=1'-0"

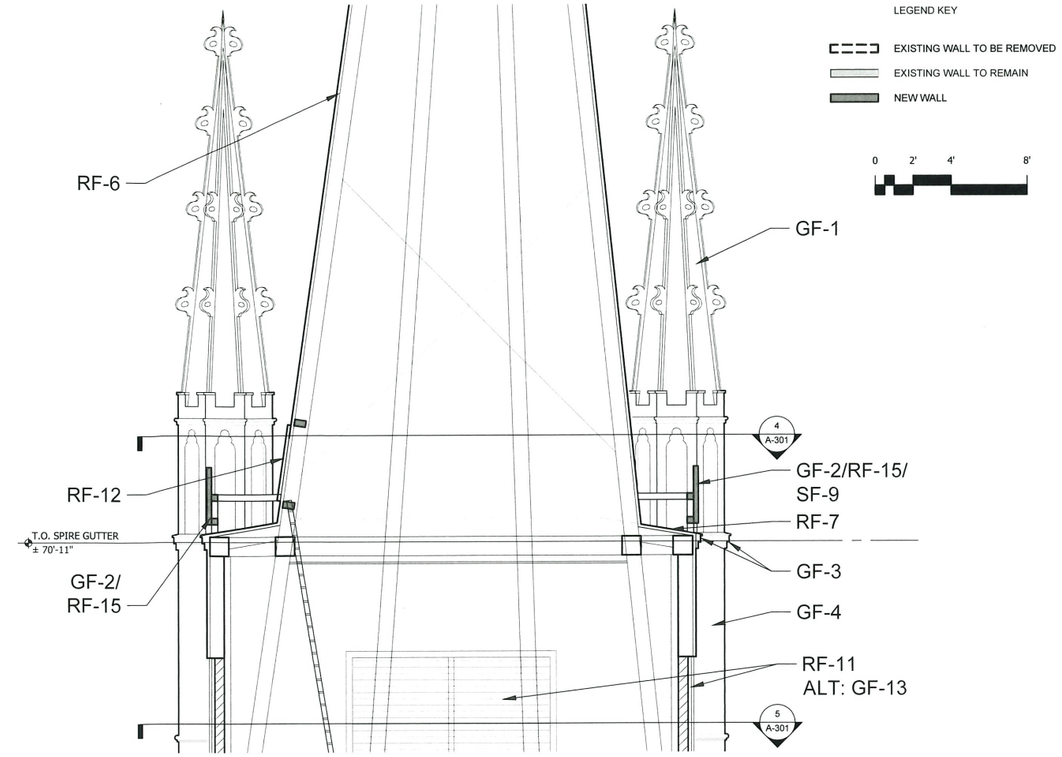

2 EAST-WEST SECTION DETAIL AT TOWER CENTERLINE
SCALE: 1/4"=1'-0"

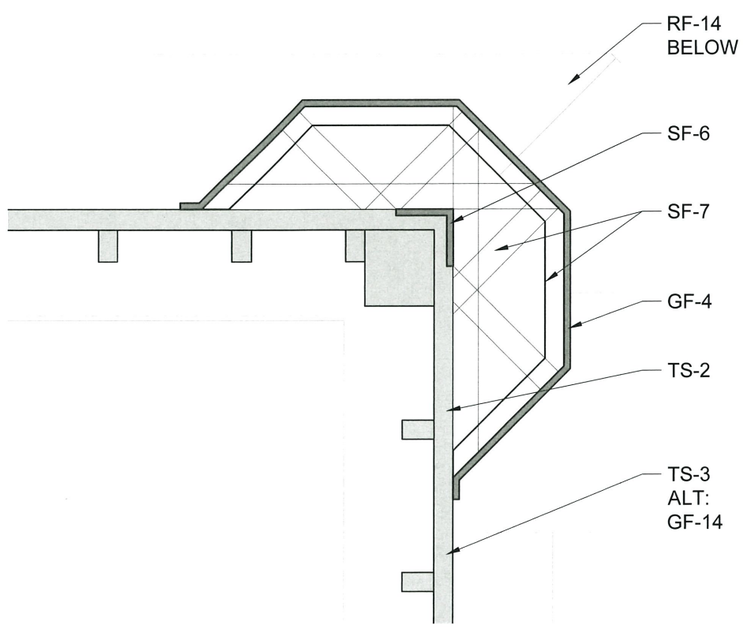

3 PLAN DETAIL AT TOWER PYLONS/PINNACLES
SCALE: 1"=1'-0"

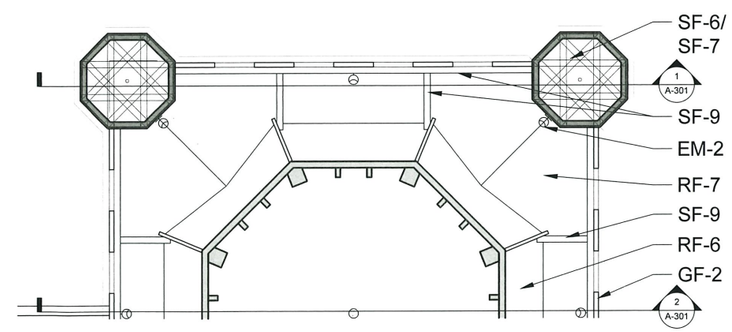

4 PARTIAL TOWER ROOF LEVEL PLAN
SCALE: 1/4"=1'-0"

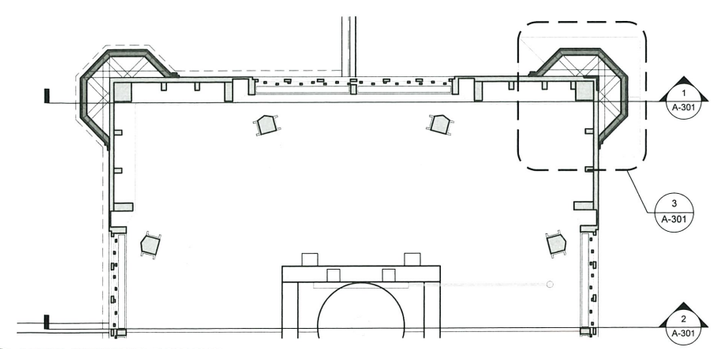

5 PARTIAL BELFRY LEVEL FLOOR PLAN
SCALE: 1/4"=1'-0"

TORREY ARCHITECTURE
75 Kneeland Street
Boston, MA 02111
617-227-1477
www.torreyarchitecture.com

STRUCTURAL ENGINEER
Structures North Consulting Engineers, Inc.
60 Washington Street, Suite 401
Salem, MA 01970
978-745-6817

STEEPLEJACK/ CONTRACTOR
American Steeple & Tower
373 Essex Street
Salem, MA 01970
978-744-7194

LANDSCAPE ARCHITECT
Weinmayr/Jay Assoc. Inc.
760 Main Street
Waltham, MA 02451

LIGHTING CONSULTANT
WSP USA
75 Arlington Street, 9th Fl
Boston, MA 02116

COST CONSULTANT
Ellana Construction Consultants
98 North Washington Street, Suite 109
Boston, MA 02114

No.	Description	Date
	MASS AVE WALL AND	
	TOWER PROJECT ESTIMATE SET	02/20/20
	REVISIONS	05/05/20
	REPORT	06/12/20

FIRST PARISH
CAMBRIDGE, MA

BUILDING
SECTIONS

Project number	1802
Date	06-12-2020
Drawn by	DM
Checked by	DT

A-301

Scale AS NOTED

TORREY
ARCHITECTURE

75 Kneeland Street
Boston, MA 02111
617-227-1477

06-08-20

KEYNOTES to ESTIMATE DRAWINGS

Project:

Mass Ave Wall and Tower Project

First Parish Church Unitarian Universalist

3 Church Street, Cambridge, MA 02138

WORK CATEGORIES SUMMARY

Cost Estimate by Clive Tysoe of Ellana Inc. Construction Consultants, with cost input as noted:

SL SITE IMPROVEMENTS AND LANDSCAPING
Plantings cost input by Weinmayr Jay Landscape Architecture
FW FOUNDATIONS AND WALLS
RF ROOFING AND FLASHING
Cost input by American Steeple and Tower, Inc. ,Yankee Steeplejack Company, Inc.
SF STRUCTURAL AND FRAMING
Cost input by American Steeple and Tower, Inc.
TS TRIM AND SIDING (WOOD) Cost input by American Steeple and Tower, Inc.
GF GLASS FIBER REINFORCED POLYMER (GFRP) RESTORATION ASSEMBLIES
Fabrication cost input by DuroFiber Inc., Architectural Fiberglass Inc.
Installation cost input by American Steeple and Tower, Inc., Yankee Steeplejack Company, Inc.
DW DOORS AND WINDOWS
PART A: wood windows; Cost input by American Steeple and Tower, Inc.,Yankee Steeplejack Company, Inc.
PART B: aluminum doors and transoms; Cost input by Ellison Bronze, Inc.
IF INTERIORS AND FINISHES
EM ELECTRICAL AND MECHANICAL
Lighting cost input by Jeffrey Berg of WSP
GS GENERAL CONDITIONS/SITE PROTECTION
Selected cost input by American Steeple and Tower, Inc., Yankee Steeplejack Company, Inc.

SL SITE IMPROVEMENTS AND LANDSCAPING

SL-1 Site Demo; remove (c.1901) existing stone steps, landing stone and sidewalls. Remove granite curbs and cobblestones. Remove and salvage brick paving within Work Area.
SL-2 Granite Steps at entrance. Concrete foundations to 4 ft below grade.
SL-3 Granite retaining walls and curbing. Retaining walls on concrete foundations to 4 ft below grade.

SL-4 Granite slab pavers at entry landing. Flames finish 24" x 36" x 2" paving stones set on concrete slab on backfilled grade.
SL-5 Granite Steps at south terrace walkways. Set on retaining walls and concrete slab on backfilled grade.
SL-6 Granite Benches, Fountain
SL-7 Ironwork walkway guardrails, step handrails and double handrails at 1:12 ramps. Painted galvanized malleable steel solid posts grouted into paving and granite base walls, mid-rails, brackets and handrails using Julius Blum profile #4429.
SL-8 Brick terrace paving within Work Area. Set on concrete substrate on compacted subgrade.
SL-9 Concrete ramps and landings. Broom finish tinted concrete slab on compacted subgrade.
SL-10 Plantings at plant beds. See drawing L-1 attached. **Plantings cost input by Weinmayr Jay Landscape Architecture**
SL-11 Notice board. Custom fabricated exterior glass-faced bulletin board cabinet on galvanized painted steel frame, internally lit.
SL-12 Gate to burial ground. Ironwork replacement painted galvanized gate.
SL-13 Restore City of Cambridge burial ground cast iron fence segment along north property line. Protect against damage during construction.
SL-14 Site drainage. On-site drywell to collect surface drainage from two cast iron trench drains and from FW-6 foundation drain piping.
SL-15 Irrigation System. Concealed automatic drip line system within plant beds to maintain SL-10.
SL-16 Tree pruning of south terrace elm, coordinate with City of Cambridge arborist

FW FOUNDATIONS AND WALLS

FW-1 Foundation waterproofing within site Work Area. At existing concrete (c.1955) cast-in-place concrete foundation walls, apply membrane to excavation extents for site work (4 ft below grade, min).
FW-2 Foundation insulation. At FW-1 locations, apply 2" extruded polystyrene rigid insulation.
FW-3 Stucco at exposed foundations. Wire lath and concrete stucco to 6" min. below finished grade over existing exposed concrete foundations at buttresses/over FW-2 rigid insulation at foundation walls.
FW-4 Insulate existing walls at Work Area exterior walls from foundation to top of attic floor level (top of eave gutter). Install blown-in dense cellulose insulation within wall cavities via round 2" dia holes cut in exterior siding. For filling of siding holes by others see TS-3.
FW-5 Granite facing stone at tower pylon bases. Honed granite 2" thick on new cementitious board substrate.
FW-6 Foundation drainage pipe set in crushed stone bed at bottom of waterproofing membrane. Run drain pipe to on-site drain manhole drywell. See Site Work SL-14.

RF ROOFING AND FLASHING
Cost input by American Steeple and Tower, Inc. ,Yankee Steeplejack Company, Inc.

RF-1 Strip and salvage existing lead-coated copper roofing at (re-clad c.1940's) spire and (c.1954 over-framed) hipped tower roof
RF-2 Remove roof guard at c.1954 hipped roof
RF-3 Remove gutters and downspouts from c.1954 hipped tower roof
RF-4 Remove section of roof guard at new eave pinnacles
RF-5 Restore Weathervane. Scope RM4 in Torrey Architecture Existing Conditions Assessment 2018
RF-6 Re-roof Spire. Following RF-1 at original spire roof, replace deteriorated sheathing boards (provide allowance for an assumed % replacement and unit cost), install asphalt roofing paper and install 20oz red copper flat seam roof at slopes and over ribs. Paint red copper roof surfaces in color to match GFRP. **See GF-12 (ALT to RF-6)**
RF-7 Tower Roof. Following SF-1 removal of c.1954 overlay roof, install new plywood roof sheathing at low-slope (original) roof pitch, self-adhering bituthene waterproofing underlayment from edge of tower, around new GF-1 pinnacles and to base of RF-6 spire roof. Install snow guards at 12" O.C. Install 20oz red copper flat seam roof. Coordinate drip edge overlap of GF-3 Tower Roof Edge Frieze Board Trim.
RF-8 Flashing at existing slate roof to tower walls. Replace broken slates to match, install self-adhering bituthene waterproofing underlayment from edge of tower, install 24oz red copper.
RF-9 not used

RF-10 Ice Belt at eave pinnacles. Remove slates between new eave pinnacles, install self-adhering bituthene waterproofing underlayment, install standing seam red copper ice belt. Install snow guards at 12" O.C

RF-11 Repair Belfry Louvers. (4 locations: tower N,E,S,W). Repair or replace red copper (c.1940s) belfry louvers. Coordinate sequence of removal and reinstallation with GF-10/GF-11 belfry opening work. **See GF-13 (ALT to at RF-11)**

RF-12 Roof hatch at tower. Frame and install prefabricated (Bilco or custom) roof access hatch at spire roof. Tie-in flashing to RF-6 Spire re-roofing.

RF-13 Belfry bell deck re-roof. Replace low slope flat seam copper bell deck roof at floor of belfry interior. Strip existing red copper, repair deteriorated sheathing, install new sloped overlay plywood, bituthene, 20 oz flat-seamed copper roofing including curbing and drainage scuppers to north and south.

RF-14 Pilaster base gable roof replacement. Strip existing (c.1954) red copper, repair deteriorated sheathing, install new sloped overlay plywood, bituthene, 20 oz flat-seamed copper roofing. Roof coverage to existing tower corner walls, providing weep drainage from GF-4 octagonal tower corner pilasters

RF-15 not used

RF-16 Re-roof entry. Strip existing red copper, repair deteriorated sheathing, install new sloped overlay plywood, bituthene, 20 oz flat-seamed copper roofing including gutter and drainage scuppers to north and south of doorway.

RF-17 Sanctuary Slate Roof at tower work area. Replace missing and broken slates to match existing. Coordinate slate work with new flashing at RF-8, RF-9, and RF-10.

SF STRUCTURAL AND FRAMING

Cost input by American Steeple and Tower, Inc., Yankee Steeplejack Company, Inc.

SF-1 Remove Tower Roof. Demolish (c.1954) over-framed 2x8 @ 16" hip roof rafters and 5/8" plywood sheathing. Sister and extend original over-framed rafters as required for RF-7.

SF-2 Frame Entry Ramp. Reframe wood floor for depressed landing and ramp at front door. Framing consists of P/T 2x10 @16" suspended from existing supporting framing with galvanized hangers, allow for sistering and repair of up to four supporting beams as part of the work.

SF-3 Frame New Windows. Wider window openings at Narthex (2 locations). Provide 3 ½" x 14" PSL headers landing on new 4x6 min jack studs running to sill, with double 2x4 or 2x6 king studs each side of opening. Increase framing thicknesses to match existing studding if wider.

SF-4 Lancet Window Backup Partition. Frame and insulate new partition behind lancet window full height in plane of existing structural reinforcement cross-beams. Provide 2x4 or 2x6 studding @ 16" with 5/8" plywood sheathing on exterior face, ½" GWB in interior face.

SF-5 Eave Pinnacles Armature. Galvanized steel armature to support GF-5 eave pinnacles (4), consisting of vertical HSS 8x3x3/8 tubes lag screwed into posts and wall framing below through wall sheathing. Projecting portions to have welded brackets and bolted P/T blocking and nailers to serve as internal structure for GF-5 pinnacle. Extend down along building wall at least 8 feet.

SF-6 Tower Pinnacles Armature. Galvanized steel armature to support GF-1 pinnacles (4), consisting of vertical L8x8x1 angles nested and lag screwed into corner posts through wall sheathing. Projecting portions to have P/T blocking and nailers bolted to angle to serve as internal structure for GF pinnacle. Extend down along building wall at least 12 feet.

SF-7 Tower Pilasters Armature. Galvanized steel armature to support GF-4 octagonal tower pilasters, consisting of octagon-shaped horizontal frames of galvanized L3x3x3/8 welded and lag-screwed to corner posts and wall studding through sheathing. Space at 8-feet (vertically) and provide bolted blocking and diagonally braced vertical 4x6 studding between them for attachment of GF-4 covers.

SF-8 Rake Balustrades Armature. Galvanized steel armature to support GF-7 rake balustrade, consisting of L-shaped bent plate braces nested into roof sheathing projecting up from roof behind rake screen, provide at every second vertical strut (every other vertical).

SF-9 Roof Parapets Armature. Galvanized steel armature to support GF-2, GF-6, GF-9 parapets (crenelated battlements), consisting of L-shaped bent plate braces nested into roof sheathing projecting vertically from roof behind GF- parapets. Provide behind each crenel (at every solid upright panel). Bolt to horizontal TS4x6x3/8 cross-rail spanning between pinnacles.

TS TRIM AND SIDING (WOOD)

Cost input by American Steeple and Tower, Inc., Yankee Steeplejack Company, Inc.

Typical: Paint surfaces in color to match GFRP.

TS-1 Remove Vertical Tower Trim. At tower corners, remove (c.1954) vertical trim boards as required for new GFRP armature and cladding.

TS-2 Prep Tower Corners. At (c.1954) vertical flush wood siding at tower corners to be concealed by new GFRP assemblies, scrape loose paint, replace deteriorated wood, install ice and water shield membrane to accept SF-6 and SF-7 Tower Pilasters and Pinnacles Armatures.

TS-3 Restore Siding. At (c.1954) vertical flush wood siding to remain exposed: scrape loose paint, replace deteriorated wood, plug siding holes from wall insulation by others under FW-4 with wood plugs and epoxy resin filler for painting, prime and paint. **See GF-14 (ALT to TS-3)**

TS-4 Restore Buttresses. At existing wood buttresses (4 locations within Work Area), scrape loose paint, replace deteriorated wood, prime and paint. Match north side 2014 restoration work. **See GF-15 (ALT to TS-4)**

TS-5 Water table. Mahogany water table trim with copper cap at bottom of wood siding, to cover FW-2/FW-3 insulation/stucco. **See GF-16 (ALT to TS-5)**

TS-6 Restore Tower Lancet Window Tracery. At (original 1833) decorative screen and surface woodwork: scrape loose paint, replace deteriorated wood using mahogany dutchmen and epoxy resin filler, prime and paint. Repair lead flashing at top surfaces of rounded head casing trim, prime and paint. **See GF-17 (ALT to TS-6)**

TS-7 Restore Clock Face. ~~Remove clock hands and remove face assembly off-site for restoration or replacement.~~ Scrape loose paint, replace deteriorated wood, prime and apply black smalt coating to clock face~~. Repair and re-gild numerals, minute marks and clock hands. Reinstall.~~ (5-22-20 note: regilding completed c.2004)

TS-8 Restore Entry Trim and Siding. At original (1833) flush board siding and decorative trimwork at pilaster base walls and gables, scrape loose paint, apply "Peel-away" paint remover at areas of excessive paint build-up, scrape to sound original wood surface, replace deteriorated wood using mahogany dutchmen and epoxy resin filler, prime and paint.

TS-9 Restore Belfry Opening Tracery. (4 locations: tower N,E,S,W). At (original 1833) decorative screen and surface woodwork: scrape loose paint, replace deteriorated and missing wood using mahogany dutchmen and epoxy resin filler, prime and paint. Using existing as model, build exact mahogany replica of missing center arch at east façade Using existing west elevation as model, restore six covered-over quatrefoil medallions below openings for remaining three elevations. Repair lead flashing (if any, or install new) at weather-exposed upper surfaces of tracery cut-outs and at rounded head casing trim, prime and paint. **See GF-18 (ALT to TS-9)**

TS-10 Restore East Elevation Lancet Windows Tracery. (Two locations: north and south stairs) At (original 1833) decorative screen and surface woodwork: scrape loose paint, replace deteriorated wood using mahogany dutchmen and epoxy resin filler, prime and paint. Repair lead flashing (if any, or install new) at weather-exposed upper surfaces of tracery cut-outs and at rounded head casing trim, prime and paint. Coordinate with DW-4 and DW-5 window restoration. **See GF-19 (ALT to TS-10)**

GF GLASS FIBER REINFORCED POLYMER (GFRP) RESTORATION ASSEMBLIES

Fabrication cost input by DuroFiber Inc, Architectural Fiberglass Inc. Installation cost input by American Steeple and Tower, Inc., Yankee Steeplejack Company, Inc.

Provide GFRP molded profile panels and semi-prefabricated assemblies for field attachment to galvanized steel armatures by others under SF- category. GFRP assemblies to be fabricated from architect's drawings and fabricator's field measurements. Paint with Sherwin Williams DTM primer and two finish coats.

Provide for each keynote line item: Fabrication cost $__ ; Shipping and Installation cost $___.

GF-1 Tower Pinnacles (4 locations). Mount to SF-7 armature on top of GF-4 pilasters.

GF-2 Tower Roof Parapets (crenelated battlement, 4 locations). Mount to RF-15 and GF-4.

GF-3 Tower Roof Edge Frieze Board Trim. (4 locations) Coordinate with RF-7 tower roof.

GF-4 Tower Corner Octagonal Pilasters. (4 locations) Segments to wrap corners of tower over SF-7 armature and terminate at vertical wall attachment strips. Each vertical segment to flash with overlapped joints at horizontal rounded banding profiles.

GF-5 Eave Pinnacles. (4 locations) Mount to SF-5 and RF-9 snow rail.

GF-6 Eave Parapets (crenelated battlement, 2 locations) Mount to RF-9 snow rail and SF-5 armature.

GF-7 Rake Balustrade. (2 locations) Mount to SF-8 armature

GF-8 Rake Roof Edge Frieze Board. (2 locations). Coordinate with GF-7 rake balustrade base and sanctuary slate roof RF-7 repairs at work area.

GF-9 Entry Roof Parapet (crenelated battlement). Mount to SF-9 armature, coordinate with RF-16 roof.

GF-10 (ALT to TS-9) See GF-18

GF-11 Belfry Opening Lattice (4 locations) Using existing as model, replace existing painted wood with exact GFRP replica. Coordinate with TS-9/GF10 and RF-11 louvers for sequence of removal and reinstallation.

5-22-20 Additional ALTERNATES IN GFRP in lieu of restoration of existing original and 1950's woodwork:

GF-12 (ALT to RF-6)

In lieu of RF-6, clad Spire in GFRP in original vertical plank surface texture. Following RF-1 at original spire roof, install stainless steel screws to secure projecting and loose existing lead-coated copper, install ice-and-watershield membrane. Fabricate and install GFRP in original patterning of vertical sheathing boards and ribs. Paint GFRP with Sherwin Williams DTM primer and two finish coats.

GF-13 (ALT to at RF-11)

In lieu of RF-11, replace Belfry Louvers in GFRP (4 locations: tower N,E,S,W). Replace deteriorated red copper (c.1940s) belfry louvers. Coordinate sequence of removal and reinstallation with GF-10/GF-11 belfry opening work.

GF-14 (ALT to TS-3)

In lieu of TS-3, clad c.1954 vertical flush wood siding in GFRP in original horizontal flush board siding surface texture. Install vertical spaced strapping and ventilate top and bottom. Paint GFRP with Sherwin Williams DTM primer and two finish coats

GF-15 (ALT to TS-4)

In lieu of TS-4, clad existing wood buttresses (4 locations within Work Area) in GFRP in original vertical flush board siding surface texture. Install vertical spaced strapping and ventilate top and bottom. Paint GFRP with Sherwin Williams DTM primer and two finish coats

GF-16 (ALT to TS-5)

In lieu of TS-5, fabricate and install GFRP water table trim at bottom of TS-3 cladding. Paint GFRP with Sherwin Williams DTM primer and two finish coats

GF-17 (ALT to at TS-6)

In lieu of TS-6, replace Tower Lancet Window Tracery in GFRP. At (original 1833) Tower Lancet Window Tracery decorative screen and surface woodwork, using existing as model, replace existing painted wood with exact GFRP replica. Overlay top surface of rounded head casing trim with GFRP in matching profile. Paint GFRP with Sherwin Williams DTM primer and two finish coats

GF-18 (ALT to TS-9)

In lieu of TS-9, replace Belfry Opening Tracery in GFRP. (4 locations: tower N,E,S,W). At (original 1833) decorative screen and surface woodwork, using existing as model, replace existing painted wood with exact GFRP replica. Using existing west elevation as model, build exact mahogany replica of six quatrefoil medallions below openings for remaining three elevations. Overlay top surface of rounded head casing trim with GFRP in matching profile. Paint GFRP with Sherwin Williams DTM primer and two finish coats.

GF-19 (ALT to TS-10)

In lieu of TS-10, replace East Elevation Lancet Windows Tracery in GFRP. At (original 1833) Lancet Window Tracery decorative screen and surface woodwork, using existing as model, replace existing painted wood with exact GFRP replica. Overlay top surface of rounded head casing trim with GFRP in matching profile. Paint GFRP with Sherwin Williams DTM primer and two finish coats.

DW DOORS AND WINDOWS

PART A: wood windows; Cost input by American Steeple and Tower, Inc., Yankee Steeplejack Company, Inc.

DW-1 Salvage Existing Tower Entry Doors. Remove and salvage existing doors and transom for re-use as fixed wall display in narthex

DW-2 New wood casement windows. (2 locations) Match existing diamond-pane narthex windows, ganged. Provide exterior storm windows to match at existing east elevation windows.

DW-3 Tower Lancet Window. Remove existing wood tracery as required to remove sash off-site for restoration. Scrape to sound original wood surface, replace deteriorated wood using mahogany dutchmen and epoxy resin filler, re-glaze as required, prime and paint.

DW-4 South Stair Window. Remove storm windows, repair on-site and re-glaze as required, prep, paint, reinstall storm windows.

DW-5 North Stair Window. Remove storm windows, repair on-site and re-glaze as required, prep, paint, reinstall storm windows.

PART B: aluminum doors and transoms; Cost input by Ellison Bronze, Inc.

DW-6 Entry Door and Transom (D-117): Ellison extruded aluminum, concealed shaft, double stile and rail balanced doors, Kynar paint finish, insulated glass. Custom insulated glass transom window.

DW-7 Sanctuary Door Pair (D-115B): Provide at existing door pair head: Dorma ED-100 double door auto operator system with wall push-plates both sides. Replace door sill with custom oak ADA sill.

DW-8 Narthex Door and Transom to South Stair (D-118): Ellison extruded aluminum, concealed shaft, narrow stile tempered glass balanced doors, Kynar paint finish. Custom glass transom window frame painted to match.

DW-9 Narthex Door and Transom to North Stair (D-116): Ellison extruded aluminum, concealed shaft, narrow stile tempered glass balanced doors, Kynar paint finish. Custom glass transom window frame painted to match.

DW-10 South Stair Door to Sanctuary (D-115A) Ellison extruded aluminum, concealed shaft, narrow stile tempered glass balanced door and sidelight, Kynar paint finish.

DW-11 North Stair Door to Sanctuary (D-115C) Ellison extruded aluminum, concealed shaft, narrow stile tempered glass balanced door and sidelight, Kynar paint finish.

IF INTERIORS AND FINISHES

IF-1 Remove Narthex Airlock Vestibule and Doors.

IF-2 Widen interior window and door arched plaster openings at DW-2 and DW-8/DW-9.

IF-3 Restore South Stair. Remove (c.1954) landing, relocate lower flight to original location, repair railings, remove and infill stair to Zero Church Street entry door, new shaped door into small closet.

IF-4 Mezzanine Gallery Ceiling. Remove existing suspended drywall ceiling and domed light coffers. Install new raised ACT ceiling.

IF-5 Mezzanine Gallery Walls. Remove existing drywall and wood furring walls against foundation walls. Install galvanized steel furring offset from concrete Insulate with Icynene Medium-density spray foam insulation.

IF-6 Bell Rope Extension System. Install bell rope system to allow ringing of tower bell from narthex. Provide new bell rope and pulleys, through-floor conduits and floor/ceiling escutcheons, terminating at ceiling of Narthex and tie-off on wall. Coordinate with American Steeple and Tower, Inc.

IF-7 Narthex and Stair Finishes. New carpet and entry carpet, refinish wood floors. Repair wood trim and plaster walls and ceilings, paint.

IF-8 Narthex step and ramp handrails. Painted malleable steel solid posts, wall brackets and handrails using Julius Blum profile #4429.

IF-9 Remove and replace north and south stair plaster ceilings with new GWB, painted.

EM ELECTRICAL AND MECHANICAL

Lighting cost input by Jeffrey Berg of WSP – see "Lighting Products" schedule for details.

EM-1 Light Poles at site (2 locations) Set on concrete bases, coordinate with Site Work. Post-top lanterns with two fixture heads and two EM-2 floodlights pole-mounted at each. Estimated fixture cost $9500 x 2 =$19,000 plus installation.

EM-2 Roof-mounted floodlights at 11 locations. See drawings for locations. Estimated fixture cost $1400 x 11 =$15,400 plus installation.

EM-3 Belfry interior light. See drawings for location. Estimated fixture cost $1400 plus installation.

EM-4 Linear cove LED lights at interior of Tower Lancet window. Six vertical cove lights at 26 ft each. See drawings for locations. Estimated fixture cost $25/lf x 160 lf =$5000 plus installation.

EM-5 Narthex ceiling luminous bowl pendants. See drawings for locations. Estimated fixture cost $1250 x 6=$7500 plus installation.

EM-6 Exterior downlights at 3 locations. See drawings for locations. Estimated fixture cost $50 x 3 =$150 plus installation.
EM-7 Narthex and Stair exit lighting and signage. Fixtures and installation.
EM-8 Narthex and Stair heating and cooling system. Wall cassette heat pump system.

GS GENERAL CONDITIONS/SITE PROTECTION
GS-1 Tower and Spire Staging **Cost input by American Steeple and Tower, Inc. , Yankee Steeplejack Company, Inc.**
GS-2 Burial Ground Fence Protection
GS-3 Site Fence/Sidewalk Protection

end