RIVER STREET INFRASTRUCTURE AND STREETSCAPE PROJECT

RIVER STREET, BLACKSTONE STREET, GREEN STREET, MAGAZINE STREET, FAIRMONT AVENUE, FAIRMONT STREET, ROCKWELL STREET, LAUREL STREET, AND KELLY ROAD

ISSUED FOR BID
APRIL 2022
HDR REFERENCE NO: 10139379
CITY OF CAMBRIDGE FILE NO:

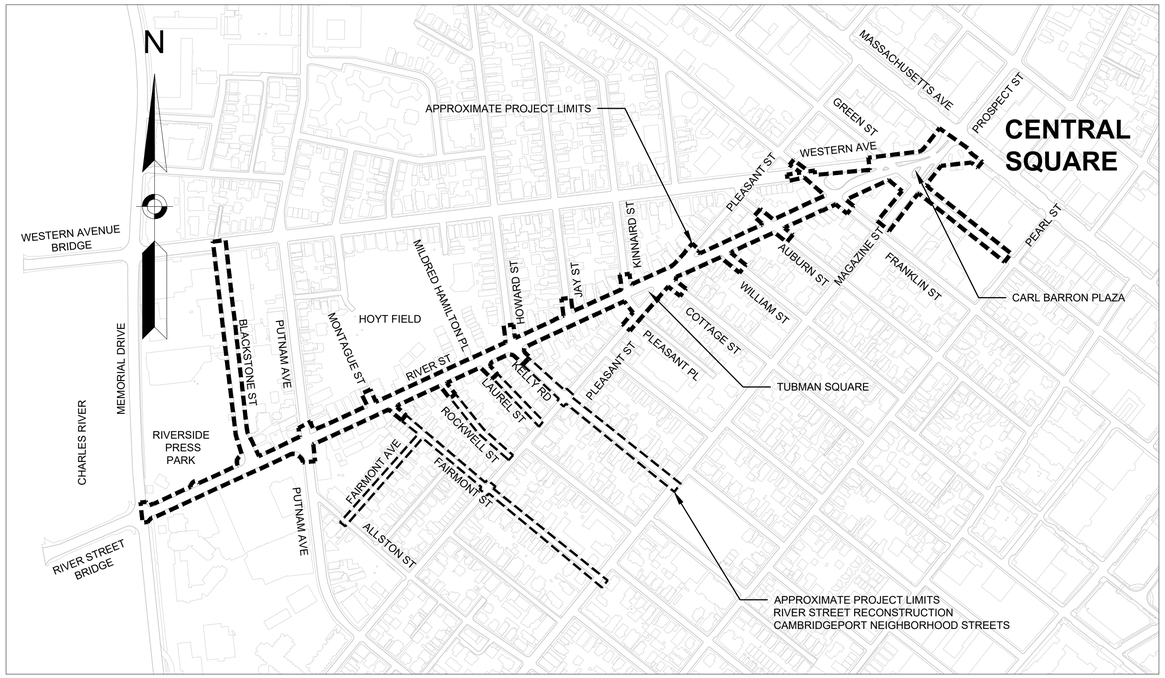

PREPARED FOR:

CITY OF CAMBRIDGE

DEPARTMENT OF PUBLIC WORKS

APRIL 2022

PROJECT DESIGN TEAM

PREPARED BY:

HDR, INC.
99 HIGH STREET
SUITE 2300
BOSTON, MA 02110

McMAHON
TRANSPORTATION ENGINEERS & PLANNERS

HALVORSON
Tighe&Bond STUDIO

25 KINGSTON ST, BOSTON MA 02111-2200
(PHONE) 617.536.0380
WWW.HALVORSONDESIGN.COM

GEI Consultants

BSI ENGINEERING
CIVIL & SUBSURFACE UTILITY ENGINEERING
100 Hallet St
Boston, MA 02124
T: (617) 265 4200
F: (617) 209 1297
www.bsieng.com

FELDMAN
GEOSPATIAL

ARTISTIC COLLABORATION WITH

SPORTS

THE CAMBRIDGE DEPARTMENT OF PUBLIC WORKS

DRAWING INDEX

SHEET NAME	DESCRIPTION
G-1.01	COVER SHEET WITH SITE LOCUS PLAN
G-1.02	DRAWING INDEX - 1
G-1.03	DRAWING INDEX - 2
G-1.04	DRAWING INDEX - 3
	RIVER STREET CORRIDOR
G-1.05	LEGEND AND ABBREVIATIONS
G-1.06	GENERAL NOTES
G-1.07	KEY PLAN - 1
G-1.08	KEY PLAN - 2
G-1.09	PAVEMENT CORES
G-2.01	TYPICAL SECTIONS - 1
G-2.02	TYPICAL SECTIONS - 2
G-2.03	TYPICAL SECTIONS - 3
G-2.04	TYPICAL SECTIONS - 4
G-3.01	CONSTRUCTION BASELINE PLAN - 1
G-3.02	CONSTRUCTION BASELINE PLAN - 2
G-3.03	CONSTRUCTION BASELINE PLAN - 3
G-3.04	CONSTRUCTION BASELINE PLAN - 4
G-3.05	CONSTRUCTION BASELINE PLAN - 5
G-3.06	CONSTRUCTION BASELINE PLAN - 6
RD-1.01	ROADWAY CONSTRUCTION DETAILS - 1
RD-1.02	ROADWAY CONSTRUCTION DETAILS - 2
RD-1.03	ROADWAY CONSTRUCTION DETAILS - 3
RD-1.04	ROADWAY CONSTRUCTION DETAILS - 4
RD-1.05	ROADWAY CONSTRUCTION DETAILS - 5
RD-1.06	DRIVEWAY AND RAMP DETAILS - 1
RD-1.07	DRIVEWAY AND RAMP DETAILS - 2
RD-1.08	DRIVEWAY AND RAMP DETAILS - 3
RD-1.09	DRIVEWAY AND RAMP DETAILS - 4
RD-1.10	DRIVEWAY AND RAMP DETAILS - 5
CD-1.01	SEWER AND WATER DETAILS -1
CD-1.02	SEWER AND WATER DETAILS -2
CD-1.03	SEWER AND WATER DETAILS -3
CD-1.04	SEWER AND WATER DETAILS -4
CD-1.05	SEWER AND WATER DETAILS -5
CD-1.06	SEWER AND WATER DETAILS -6
CD-1.07	CATCH BASIN SCHEDULE
EX-1.01	EXISTING CONDITIONS - 1
EX-1.02	EXISTING CONDITIONS - 2
EX-1.03	EXISTING CONDITIONS - 3
EX-1.04	EXISTING CONDITIONS - 4
EX-1.05	EXISTING CONDITIONS - 5
EX-1.06	EXISTING CONDITIONS - 6
EX-1.07	EXISTING CONDITIONS - 7
EX-1.08	EXISTING CONDITIONS - 8
EX-1.09	EXISTING CONDITIONS - 9
EX-1.10	EXISTING CONDITIONS - 10
EX-1.11	EXISTING CONDITIONS - 11
EX-2.01	EXISTING SUBSURFACE CONDITIONS TEST PITS - 1
EX-2.02	EXISTING SUBSURFACE CONDITIONS TEST PITS - 2
EX-2.03	EXISTING SUBSURFACE CONDITIONS TEST PITS - 3

SHEET NAME	DESCRIPTION
DP-1.01	DISPOSITION PLANS - 1
DP-1.02	DISPOSITION PLANS - 2
DP-1.03	DISPOSITION PLANS - 3
DP-1.04	DISPOSITION PLANS - 4
DP-1.05	DISPOSITION PLANS - 5
DP-1.06	DISPOSITION PLANS - 6
DP-1.07	DISPOSITION PLANS - 7
DP-1.08	DISPOSITION PLANS - 8
DP-1.09	DISPOSITION PLANS - 9
DP-1.10	DISPOSITION PLANS - 10
DP-1.11	DISPOSITION PLANS - 11
C-1.01	CIVIL CONSTRUCTION PLAN AND PROFILE - 1
C-1.02	CIVIL CONSTRUCTION PLAN AND PROFILE - 2
C-1.03	CIVIL CONSTRUCTION PLAN AND PROFILE - 3
C-1.04	CIVIL CONSTRUCTION PLAN AND PROFILE - 4
C-1.05	CIVIL CONSTRUCTION PLAN AND PROFILE - 5
C-1.06	CIVIL CONSTRUCTION PLAN AND PROFILE - 6
C-1.07	CIVIL CONSTRUCTION PLAN AND PROFILE - 7
C-1.08	CIVIL CONSTRUCTION PLAN AND PROFILE - 8
C-1.09	CIVIL CONSTRUCTION PLAN AND PROFILE - 9
C-1.10	CIVIL CONSTRUCTION PLAN AND PROFILE - 10
C-1.11	CIVIL CONSTRUCTION PLAN AND PROFILE - 11
C-1.12	CIVIL CONSTRUCTION PLAN AND PROFILE - 12
U-1.01	WATER MAIN AND UTILITY COORDINATION PLANS - 1
U-1.02	WATER MAIN AND UTILITY COORDINATION PLANS - 2
U-1.03	WATER MAIN AND UTILITY COORDINATION PLANS - 3
U-1.04	WATER MAIN AND UTILITY COORDINATION PLANS - 4
U-1.05	WATER MAIN AND UTILITY COORDINATION PLANS - 5
U-1.06	WATER MAIN AND UTILITY COORDINATION PLANS - 6
U-1.07	WATER MAIN AND UTILITY COORDINATION PLANS - 7
U-1.08	WATER MAIN AND UTILITY COORDINATION PLANS - 8
U-1.09	WATER MAIN AND UTILITY COORDINATION PLANS - 9
U-1.10	WATER MAIN AND UTILITY COORDINATION PLANS - 10
U-1.11	WATER MAIN AND UTILITY COORDINATION PLANS - 11
R-1.01	ROADWAY CONSTRUCTION PLAN - 1
R-1.02	ROADWAY CONSTRUCTION PLAN - 2
R-1.03	ROADWAY CONSTRUCTION PLAN - 3
R-1.04	ROADWAY CONSTRUCTION PLAN - 4
R-1.05	ROADWAY CONSTRUCTION PLAN - 5
R-1.06	ROADWAY CONSTRUCTION PLAN - 6
R-1.07	ROADWAY CONSTRUCTION PLAN - 7
R-1.08	ROADWAY CONSTRUCTION PLAN - 8
R-1.09	ROADWAY CONSTRUCTION PLAN - 9
R-1.10	ROADWAY CONSTRUCTION PLAN - 10
R-1.11	ROADWAY CONSTRUCTION PLAN - 11
R-2.01	ROADWAY CURB TIE AND ALIGNMENT PLAN - 1
R-2.02	ROADWAY CURB TIE AND ALIGNMENT PLAN - 2
R-2.03	ROADWAY CURB TIE AND ALIGNMENT PLAN - 3
R-2.04	ROADWAY CURB TIE AND ALIGNMENT PLAN - 4
R-2.05	ROADWAY CURB TIE AND ALIGNMENT PLAN - 5
R-2.06	ROADWAY CURB TIE AND ALIGNMENT PLAN - 6

SHEET NAME	DESCRIPTION
R-2.07	ROADWAY CURB TIE AND ALIGNMENT PLAN - 7
R-2.08	ROADWAY CURB TIE AND ALIGNMENT PLAN - 8
R-2.09	ROADWAY CURB TIE AND ALIGNMENT PLAN - 9
R-2.10	ROADWAY CURB TIE AND ALIGNMENT PLAN - 10
R-2.11	ROADWAY CURB TIE AND ALIGNMENT PLAN - 11
R-2.12	CURB TIE DETAIL SHEET - 1
R-2.13	CURB TIE DETAIL SHEET - 2
R-2.14	CURB TIE DETAIL SHEET - 3
R-2.15	CURB TIE DETAIL SHEET - 4
R-2.15A	CURB TIE DETAIL SHEET - 4A
R-2.16	CURB TIE DETAIL SHEET - 5
R-2.17	CURB TIE DETAIL SHEET - 6
R-2.18	CURB TIE DETAIL SHEET - 7
R-2.19	CURB CURVE TABLES
R-2.20	SEPARATED BIKE LANE ALIGNMENT TABLES - 1
R-2.21	SEPARATED BIKE LANE ALIGNMENT TABLES - 2
R-3.01	ROADWAY GRADING PLAN AND PROFILE - 1
R-3.02	ROADWAY GRADING PLAN AND PROFILE - 2
R-3.03	ROADWAY GRADING PLAN AND PROFILE - 3
R-3.04	ROADWAY GRADING PLAN AND PROFILE - 4
R-3.05	ROADWAY GRADING PLAN AND PROFILE - 5
R-3.06	ROADWAY GRADING PLAN AND PROFILE - 6
R-3.07	ROADWAY GRADING PLAN AND PROFILE - 7
R-3.08	ROADWAY GRADING PLAN AND PROFILE - 8
R-3.09	ROADWAY GRADING PLAN AND PROFILE - 9
R-3.10	ROADWAY GRADING PLAN AND PROFILE - 10
R-3.11	ROADWAY GRADING PLAN AND PROFILE - 11
R-3.12	ROADWAY GRADING PLAN AND PROFILE - 12
R-4.01	ROADWAY INTERSECTION GRADING PLAN - 1
R-4.02	ROADWAY INTERSECTION GRADING PLAN - 2
R-4.03	ROADWAY INTERSECTION GRADING PLAN - 3
R-4.04	ROADWAY INTERSECTION GRADING PLAN - 4
R-4.05	ROADWAY INTERSECTION GRADING PLAN - 5
R-4.06	ROADWAY INTERSECTION GRADING PLAN - 6
R-4.07	ROADWAY INTERSECTION GRADING PLAN - 7
R-4.08	ROADWAY INTERSECTION GRADING PLAN - 8
R-4.08A	ROADWAY INTERSECTION GRADING PLAN - 8A
R-4.09	ROADWAY INTERSECTION GRADING PLAN - 9
R-4.10	ROADWAY INTERSECTION GRADING PLAN - 10
R-4.11	ROADWAY INTERSECTION GRADING PLAN - 11
E-1.01	STREET LIGHTING PLAN - 1
E-1.02	STREET LIGHTING PLAN - 2
E-1.03	STREET LIGHTING PLAN - 3
E-1.04	STREET LIGHTING PLAN - 4
E-1.05	STREET LIGHTING PLAN - 5
E-1.06	STREET LIGHTING PLAN - 6
E-1.07	STREET LIGHTING PLAN - 7
E-1.08	STREET LIGHTING PLAN - 8
ED-1.01	LIGHTING DETAILS - 1
ED-1.02	LIGHTING DETAILS - 2
ED-1.03	LIGHTING DETAILS - 3

SHEET NAME	DESCRIPTION
S-1.01	ART INSTALLATION FOUNDATION DETAILS
DET-1.01	CONSTRUCTION DETAILS 1
TR-1.01	TRAFFIC SIGNS & PAVEMENT MARKINGS PLAN - 1
TR-1.02	TRAFFIC SIGNS & PAVEMENT MARKINGS PLAN - 2
TR-1.03	TRAFFIC SIGNS & PAVEMENT MARKINGS PLAN - 3
TR-1.04	TRAFFIC SIGNS & PAVEMENT MARKINGS PLAN - 4
TR-1.05	TRAFFIC SIGNS & PAVEMENT MARKINGS PLAN - 5
TR-1.06	TRAFFIC SIGNS & PAVEMENT MARKINGS PLAN - 6
TR-1.07	TRAFFIC SIGNS & PAVEMENT MARKINGS PLAN - 7
TR-1.08	TRAFFIC SIGNS & PAVEMENT MARKINGS PLAN - 8
TR-1.09	TRAFFIC SIGNS & PAVEMENT MARKINGS PLAN - 9
TR-1.10	TRAFFIC SIGNS & PAVEMENT MARKINGS PLAN - 10
TR-1.11	TRAFFIC SIGNS & PAVEMENT MARKINGS PLAN - 11
TR-2.01	TRAFFIC SIGNAL LAYOUT PLAN 1 RIVER STREET AT PUTNAM AVENUE
TR-2.02	TRAFFIC SIGNAL LAYOUT PLAN 2 RIVER STREET AT HOWARD STREET AND KELLY ROAD
TR-2.03	TRAFFIC SIGNAL LAYOUT PLAN 3 RIVER STREET AT FRANKLIN STREET AND WESTERN AVENUE
TR-2.04	TRAFFIC SIGNAL DATA PLAN 3 RIVER STREET AT FRANKLIN STREET AND WESTERN AVENUE
TR-2.05	TRAFFIC SIGNAL LAYOUT PLAN 4 RIVER STREET AT GREEN STREET AND WESTERN AVENUE
TR-2.06	TRAFFIC SIGNAL DATA PLAN 4 RIVER STREET AT GREEN STREET AND WESTERN AVENUE
TR-2.07	TRAFFIC SIGNAL LAYOUT PLAN 5 RIVER STREET AT MASSACHUSETTS AVENUE
TR-2.08	TRAFFIC SIGNAL DATA PLAN 5 RIVER STREET AT MASSACHUSETTS AVENUE
TR-2.09	TIME SPACE DIAGRAM DIAL 1 WEEKDAY OFF-PEAK AND OVERNIGHT HOURS
TR-2.10	TIME SPACE DIAGRAM DIAL 2 WEEKDAY MORNING PEAK HOURS
TR-2.11	TIME SPACE DIAGRAM DIAL 3 WEEKDAY EVENING PEAK HOURS
TR-3.01	TRAFFIC SIGN SUMMARY 1
TR-3.02	TRAFFIC SIGN SUMMARY 2
TR-3.03	TRAFFIC SIGN SUMMARY 3
TR-3.04	TRAFFIC SIGN SUMMARY 4
L-1.01	STREETSCAPE MATERIALS AND STREET TREE PIT LAYOUT PLAN - 1
L-1.02	STREETSCAPE MATERIALS AND STREET TREE PIT LAYOUT PLAN - 2
L-1.03	STREETSCAPE MATERIALS AND STREET TREE PIT LAYOUT PLAN - 3
L-1.04	STREETSCAPE MATERIALS AND STREET TREE PIT LAYOUT PLAN - 4
L-1.05	STREETSCAPE MATERIALS AND STREET TREE PIT LAYOUT PLAN - 5
L-1.06	STREETSCAPE MATERIALS AND STREET TREE PIT LAYOUT PLAN - 6
L-1.07	STREETSCAPE MATERIALS AND STREET TREE PIT LAYOUT PLAN - 7
L-1.08	STREETSCAPE MATERIALS AND STREET TREE PIT LAYOUT PLAN - 8
L-1.09	STREETSCAPE MATERIALS AND STREET TREE PIT LAYOUT PLAN - 9
L-1.10	STREETSCAPE MATERIALS AND STREET TREE PIT LAYOUT PLAN - 10
L-1.11	STREETSCAPE MATERIALS AND STREET TREE PIT LAYOUT PLAN - 11
L-2.01	STREETSCAPE PLANTING AND PLANTER LAYOUT PLAN - 1
L-2.02	STREETSCAPE PLANTING AND PLANTER LAYOUT PLAN - 2
L-2.03	STREETSCAPE PLANTING AND PLANTER LAYOUT PLAN - 3
L-2.04	STREETSCAPE PLANTING AND PLANTER LAYOUT PLAN - 4
L-2.05	STREETSCAPE PLANTING AND PLANTER LAYOUT PLAN - 5
L-2.06	STREETSCAPE PLANTING AND PLANTER LAYOUT PLAN - 6
L-2.07	STREETSCAPE PLANTING AND PLANTER LAYOUT PLAN - 7
L-2.08	STREETSCAPE PLANTING AND PLANTER LAYOUT PLAN - 8
L-2.09	STREETSCAPE PLANTING AND PLANTER LAYOUT PLAN - 9
L-2.10	STREETSCAPE PLANTING AND PLANTER LAYOUT PLAN - 10

ISSUED FOR BID

HDR ENGINEERING, INC.
99 HIGH STREET, SUITE 2300
BOSTON, MASSACHUSETTS 02110–2378
(617) 357–7700

COMMONWEALTH OF MASSACHUSETTS
PHILIP FUSCO
CIVIL
No. 45868
REGISTERED PROFESSIONAL ENGINEER

Scale			
Date			
Job No.			
Designed by			
Drawn by			
Checked by	No.	Description	Date
Approved by	REVISIONS		

CAMBRIDGE DEPARTMENT OF PUBLIC WORKS

Client: CITY OF CAMBRIDGE, MA

Project: RIVER STREET
INFRASTRUCTURE AND STREETSCAPE PROJECT

Drawing: **DRAWING INDEX - 1**

Sheet: G-1.02

Total Sheets: 381

File No.:

File: C:\PWWORKING\EAST01\D0786396\7113XXX_(FRONT END SHEETS).DWG Plotted: 4/22/2022 1:33:37 PM

DRAWING INDEX

SHEET NAME	DESCRIPTION
L-2.11	STREETSCAPE PLANTING AND PLANTER LAYOUT PLAN - 11
L-3.01	STREETSCAPE AND STANDARD DETAILS
L-3.02	STREETSCAPE AND STANDARD DETAILS
L-3.03	STREETSCAPE AND STANDARD DETAILS
L-3.04	STREETSCAPE AND STANDARD DETAILS
L-3.05	STREETSCAPE AND STANDARD DETAILS
L-3.06	ENLARGEMENT PLANS
L-3.07	ENLARGEMENT PLANS
L-4.00	TUBMAN SQUARE MATERIALS PLAN
L-4.10	TUBMAN SQUARE LAYOUT PLAN
L-4.20	TUBMAN SQUARE PAVING PLAN
L-4.30	TUBMAN SQUARE GRADING PLAN
L-4.40	TUBMAN SQUARE PLANTING PLAN
L-4.50	TUBMAN SQUARE DETAILS
L-4.51	TUBMAN SQUARE DETAILS
L-4.52	TUBMAN SQUARE DETAILS
L-4.53	TUBMAN SQUARE DETAILS
I-1.01	IRRIGATION PLAN - 1
I-1.02	IRRIGATION PLAN - 2
I-1.03	IRRIGATION PLAN - 3
I-1.04	IRRIGATION PLAN - 4
I-1.05	IRRIGATION PLAN - 5
I-1.06	IRRIGATION PLAN - 6
I-1.07	IRRIGATION PLAN - 7
I-1.08	IRRIGATION PLAN ENLARGEMENT - 1
I-2.00	IRRIGATION DETAILS - 1
I-2.01	IRRIGATION DETAILS - 2
I-2.02	IRRIGATION DETAILS - 3
TMP-1.01	TRAFFIC MANAGEMENT DETAIL - 1
TMP-1.02	TRAFFIC MANAGEMENT DETAIL - 2
TMP-1.03	TRAFFIC MANAGEMENT DETAIL - 3
TMP-1.04	TRAFFIC MANAGEMENT DETOUR - 1
TMP-1.05	TRAFFIC MANAGEMENT DETOUR - 2
	CARL BARRON PLAZA
A-100	SITE PLAN
A-101	RIVER ST SHELTER - PLANS
A-102	MAGAZINE ST SHELTER - PLANS
A-103	GREEN ST SHELTER - PLANS
A-104	GREEN ST REFLECTED CEILING PLAN
A-111	RIVER ST SHELTER - STONE LAYOUT PLAN AND ELEVATIONS
A-112	MAGAZINE ST SHELTER - STONE LAYOUT PLAN AND ELEVATIONS
A-121	BOOTH PLAN, RCP AND CEILING FRAMING PLAN
A-201	BUS SHELTER ELEVATIONS - RIVER ST
A-202	BUS SHELTER ELEVATIONS - MAGAZINE ST
A-203	BUS SHELTER ELEVATIONS - GREEN ST
A-301	BUS SHELTER CROSS SECTIONS
A-401	BUS SHELTER WALL SECTIONS
A-402	BUS SHELTER WALL SECTIONS
A-511	CANOPY DETAILS
A-521	CUSTOM BENCH DETAILS
A-522	LCD SCREEN AND FVM DETAILS

SHEET NAME	DESCRIPTION
A-601	STOREFRONT AND WINDSCREEN DIAGRAMS
A-602	WINDSCREEN DIAGRAMS
A-611	STOREFRONT AND WINDSCREEN DETAILS
A-612	WINDSCREEN DETAILS
A-701	RIVER ST BOOTH INTERIOR ELEVATIONS
A-702	BOOTH DETAILS
A-801	SIGNAGE PLAN
A-802	SIGNAGE ELEVATIONS
E-101	RIVER STREET SHELTER - LIGHTING PLANS
S-1.00	STRUCTURAL GENERAL NOTES
S-1.01	LOCATION PLAN
S-2.01	FOUNDATION LOCATION PLAN
S-3.01	SHELTER 1 GROUND LEVEL PLAN
S-3.02	SHELTER 2 GROUND LEVEL PLAN
S-3.03	SHELTER 3 GROUND LEVEL PLAN
S-3.04	RIBBON STRUCTURE GROUND LEVEL PLAN (1 OF 2)
S-3.05	RIBBON STRUCTURE GROUND LEVEL PLAN (2 OF 2)
S-4.01	SHELTER 1 ROOF FRAMING PLAN
S-4.02	SHELTER 2 ROOF FRAMING PLAN
S-4.03	SHELTER 3 ROOF FRAMING PLAN
S-5.01	SHELTER 1 SECTIONS
S-5.02	SHELTER 2 SECTIONS
S-5.03	SHELTER 3 SECTIONS
S-5.04	SHELTER 1 FOUNDATION DETAILS (1 OF 2)
S-5.05	SHELTER 1 FOUNDATION DETAILS (2 OF 2)
S-5.06	SHELTER 2 FOUNDATION DETAILS
S-5.07	SHELTER 3 FOUNDATION DETAILS
S-5.08	RIBBON STRUCTURE FOUNDATION DETAILS
S-5.09	MISCELLANEOUS FOUNDATION DETAILS
S-5.10	STRUCTURAL STEEL DETAILS (1 OF 3)
S-5.11	STRUCTURAL STEEL DETAILS (2 OF 3)
S-5.12	STRUCTURAL STEEL DETAILS (3 OF 3)
L-5.00	CARL BARRON PLAZA MATERIALS PLAN
L-5.10	CARL BARRON PLAZA LAYOUT PLAN
L-5.20	CARL BARRON PLAZA PAVING PLAN
L-5.21	CARL BARRON PLAZA PAVING PLAN ENLARGEMENTS
L-5.30	CARL BARRON PLAZA GRADING PLAN
L-5.40	CARL BARRON PLAZA PLANTING PLAN
L-5.50	CARL BARRON PLAZA DETAILS
L-5.51	CARL BARRON PLAZA DETAILS
L-5.52	CARL BARRON PLAZA DETAILS
L-5.53	CARL BARRON PLAZA SECTIONAL DETAIL
SC-1.01	RIBBON LAYOUT AND ELEVATION
SC-1.10	RIBBON BENCH LAYOUT
SC-2.00	RIBBON DETAILS - 1
SC-2.10	RIBBON DETAILS - 2
SC-2.20	RIBBON DETAILS - 3
SC-2.30	RIBBON DETAILS - 4
SC-3.00	RIBBON - STAGE
SC-3.10	RIBBON - STAGE SUPPORT
SC-4.00	BIKE LANE SEPARATOR

SHEET NAME	DESCRIPTION
SC-5.00	RIBBON MISCELLANEOUS DETAILS
	CAMBRIDGE NEIGHBORHOOD STREETS (CNS)
G-106A	KEY PLAN - 3
G-109	PAVEMENT CORES
G-2.05	TYPICAL SECTIONS - 5
G-2.06	TYPICAL SECTIONS - 6
G-3.08	CONSTRUCTION BASELINE PLAN - 7
G-3.09	CONSTRUCTION BASELINE PLAN - 8
CD-1.10	CNS CATCH BASIN SCHEDULE
RD-1.11	DRIVEWAY DETAILS - 1
RD-1.12	DRIVEWAY DETAILS - 2
RD-1.13	RAMP DETAILS - 3
EX-1.20	EXISTING CONDITIONS - 20
EX-1.21	EXISTING CONDITIONS - 21
EX-1.22	EXISTING CONDITIONS - 22
EX-1.23	EXISTING CONDITIONS - 23
EX-1.24	EXISTING CONDITIONS - 24
EX-1.25	EXISTING CONDITIONS - 25
EX-1.26	EXISTING CONDITIONS - 26
C-1.20	CIVIL CONSTRUCTION PLAN AND PROFILE - 20
C-1.21	CIVIL CONSTRUCTION PLAN AND PROFILE - 21
C-1.22	CIVIL CONSTRUCTION PLAN AND PROFILE - 22
C-1.23	CIVIL CONSTRUCTION PLAN AND PROFILE - 23
C-1.24	CIVIL CONSTRUCTION PLAN AND PROFILE - 24
C-1.25	CIVIL CONSTRUCTION PLAN AND PROFILE - 25
C-1.26	CIVIL CONSTRUCTION PLAN AND PROFILE - 26
U-1.20	WATER MAIN AND UTILITY COORDINATION PLANS - 20
U-1.21	WATER MAIN AND UTILITY COORDINATION PLANS - 21
U-1.22	WATER MAIN AND UTILITY COORDINATION PLANS - 22
U-1.23	WATER MAIN AND UTILITY COORDINATION PLANS - 23
U-1.24	WATER MAIN AND UTILITY COORDINATION PLANS - 24
U-1.25	WATER MAIN AND UTILITY COORDINATION PLANS - 25
U-1.26	WATER MAIN AND UTILITY COORDINATION PLANS - 26
R-1.20	ROADWAY CONSTRUCTION PLAN - 20
R-1.21	ROADWAY CONSTRUCTION PLAN - 21
R-1.22	ROADWAY CONSTRUCTION PLAN - 22
R-1.23	ROADWAY CONSTRUCTION PLAN - 23
R-1.24	ROADWAY CONSTRUCTION PLAN - 24
R-1.25	ROADWAY CONSTRUCTION PLAN - 25
R-1.26	ROADWAY CONSTRUCTION PLAN - 26
R-2.20	ROADWAY CURB TIE AND ALIGNMENT PLAN - 20
R-2.21	ROADWAY CURB TIE AND ALIGNMENT PLAN - 21
R-2.22	ROADWAY CURB TIE AND ALIGNMENT PLAN - 22
R-2.23	ROADWAY CURB TIE AND ALIGNMENT PLAN - 23
R-2.24	ROADWAY CURB TIE AND ALIGNMENT PLAN - 24
R-2.25	ROADWAY CURB TIE AND ALIGNMENT PLAN - 25
R-2.26	ROADWAY CURB TIE AND ALIGNMENT PLAN - 26
R-3.20	ROADWAY GRADING PLAN AND PROFILE - 20
R-3.21	ROADWAY GRADING PLAN AND PROFILE - 21
R-3.22	ROADWAY GRADING PLAN AND PROFILE - 22
R-3.23	ROADWAY GRADING PLAN AND PROFILE - 23

ISSUED FOR BID

HDR ENGINEERING, INC.
99 HIGH STREET, SUITE 2300
BOSTON, MASSACHUSETTS 02110-2378
(617) 357-7700

COMMONWEALTH OF MASSACHUSETTS
PHILIP FUSCO
CIVIL
No. 45868
REGISTERED PROFESSIONAL ENGINEER

Scale			
Date			
Job No.			
Designed by			
Drawn by			
Checked by	No.	Description	Date
Approved by	REVISIONS		

THE WORKS — CAMBRIDGE DEPARTMENT OF PUBLIC WORKS

Client: CITY OF CAMBRIDGE, MA	Sheet: G-1.03
Project: RIVER STREET INFRASTRUCTURE AND STREETSCAPE PROJECT	Total Sheets: 381
Drawing: **DRAWING INDEX - 2**	File No.

1:34:39 PM

File: C:\PW\WORKING\EAST01\D0786396\7113XXX_(FRONT END SHEETS).DWG Plotted: 4/22/2022

DRAWING INDEX

SHEET NAME	DESCRIPTION
R-3.24	ROADWAY GRADING PLAN AND PROFILE - 24
R-3.25	ROADWAY GRADING PLAN AND PROFILE - 25
R-3.26	ROADWAY GRADING PLAN AND PROFILE - 26
R-4.12	ROADWAY INTERSECTION GRADING PLAN - 12
R-4.13	ROADWAY INTERSECTION GRADING PLAN - 13
R-4.14	ROADWAY INTERSECTION GRADING PLAN - 14
R-4.15	ROADWAY INTERSECTION GRADING PLAN - 15
TR-1.20	TRAFFIC SIGN AND PAVEMENT MARKINGS PLAN - 20
TR-1.21	TRAFFIC SIGN AND PAVEMENT MARKINGS PLAN - 21
TR-1.22	TRAFFIC SIGN AND PAVEMENT MARKINGS PLAN - 22
TR-1.23	TRAFFIC SIGN AND PAVEMENT MARKINGS PLAN - 23
TR-1.24	TRAFFIC SIGN AND PAVEMENT MARKINGS PLAN - 24
TR-1.25	TRAFFIC SIGN AND PAVEMENT MARKINGS PLAN - 25
TR-1.26	TRAFFIC SIGN AND PAVEMENT MARKINGS PLAN - 26
TR-1.27	TRAFFIC SIGN AND PAVEMENT MARKINGS PLAN - 27
TMP-6.01	TRAFFIC MANAGEMENT PLANS - DETOUR PLANS (1 OF 14)
TMP-6.02	TRAFFIC MANAGEMENT PLANS - DETOUR PLANS (2 OF 14)
TMP-6.03	TRAFFIC MANAGEMENT PLANS - DETOUR PLANS (3 OF 14)
TMP-6.04	TRAFFIC MANAGEMENT PLANS - DETOUR PLANS (4 OF 14)
TMP-6.05	TRAFFIC MANAGEMENT PLANS - DETOUR PLANS (5 OF 14)
TMP-6.06	TRAFFIC MANAGEMENT PLANS - DETOUR PLANS (6 OF 14)
TMP-6.07	TRAFFIC MANAGEMENT PLANS - DETOUR PLANS (7 OF 14)
TMP-6.08	TRAFFIC MANAGEMENT PLANS - DETOUR PLANS (8 OF 14)
TMP-6.09	TRAFFIC MANAGEMENT PLANS - DETOUR PLANS (9 OF 14)
TMP-6.10	TRAFFIC MANAGEMENT PLANS - DETOUR PLANS (10 OF 14)
TMP-6.11	TRAFFIC MANAGEMENT PLANS - DETOUR PLANS (11 OF 14)
TMP-6.12	TRAFFIC MANAGEMENT PLANS - DETOUR PLANS (12 OF 14)
TMP-6.13	TRAFFIC MANAGEMENT PLANS - DETOUR PLANS (13 OF 14)
TMP-6.14	TRAFFIC MANAGEMENT PLANS - DETOUR PLANS (14 OF 14)

File: C:\PWWORKINGIEAST01\D0786396\7113XXX_(FRONT END SHEETS).DWG Plotted: 4/15/2022 3:39:57 PM

ISSUED FOR BID

HDR ENGINEERING, INC.
99 HIGH STREET, SUITE 2300
BOSTON, MASSACHUSETTS 02110–2378
(617) 357–7700

COMMONWEALTH OF MASSACHUSETTS
PHILIP FUSCO CIVIL No. 45868
REGISTERED PROFESSIONAL ENGINEER

Scale			
Date			
Job No.			
Designed by			
Drawn by			
Checked by	No.	Description	Date
Approved by	REVISIONS		

THE WORKS — CAMBRIDGE DEPARTMENT OF PUBLIC

Client	CITY OF CAMBRIDGE, MA	Sheet	G-104
Project	RIVER STREET INFRASTRUCTURE AND STREETSCAPE PROJECT	Total Sheets	381
Drawing	**DRAWING INDEX - 3**	File No.	

GENERAL SYMBOLS

EXISTING	PROPOSED	DESCRIPTION
JB	JB	JERSEY BARRIER
CB	CB	CATCH BASIN
		CATCH BASIN CURB INLET
FP	FP	FLAG POLE
GP	GP	GAS PUMP
MB	MB	MAIL BOX
		POST SQUARE
		POST CIRCULAR
WELL	WELL	WELL
EHH	EHH	ELECTRIC HANDHOLE
		FENCE GATE POST
GG	GG	GAS GATE
BHL #	BHL #	BORING HOLE
MW #	MW #	MONITORING WELL
TP #	TP #	TEST PIT
		HYDRANT
		LIGHT POLE
CO.BD.		COUNTY BOUND
		GPS POINT
C	C	CABLE MANHOLE
D	D	DRAINAGE MANHOLE
E	E	ELECTRIC MANHOLE
G	G	GAS MANHOLE
M	M	MISC MANHOLE
S	S	SEWER MANHOLE
T	T	TELEPHONE MANHOLE
W	W	WATER MANHOLE
MHB	MHB	MASSACHUSETTS HIGHWAY BOUND
MON		MONUMENT
SB		STONE BOUND
TB		TOWN OR CITY BOUND
		TRAVERSE OR TRIANGULATION STATION
TPL or GUY	TPL or GUY	TROLLEY POLE OR GUY POLE
HTP		TRANSMISSION POLE
UFB	UFB	UTILITY POLE W/ FIREBOX
UPDL	UPDL	UTILITY POLE WITH DOUBLE LIGHT
ULT	ULT	UTILITY POLE W / 1 LIGHT
UPL	UPL	UTILITY POLE
		BUSH
SIZE & TYPE		TREE
		STUMP
		SWAMP / MARSH
WG	WG	WATER GATE
PM	PM	PARKING METER
		OVERHEAD CABLE/WIRE
		CURBING
100 99		CONTOURS (ON-THE-GROUND SURVEY DATA)
100 99		CONTOURS (PHOTOGRAMMETRIC DATA)
		UNDERGROUND DRAIN PIPE (DOUBLE LINE 24 INCH AND OVER)
		UNDERGROUND ELECTRIC DUCT (DOUBLE LINE 24 INCH AND OVER)
		UNDERGROUND GAS MAIN (DOUBLE LINE 24 INCH AND OVER)
		UNDERGROUND SEWER MAIN (DOUBLE LINE 24 INCH AND OVER)
		UNDERGROUND TELEPHONE DUCT (DOUBLE LINE 24 INCH AND OVER)
		UNDERGROUND WATER MAIN (DOUBLE LINE 24 INCH AND OVER)
		BALANCED STONE WALL
		GUARD RAIL - STEEL POSTS
		GUARD RAIL - WOOD POSTS
		GUARD RAIL - DOUBLE FACE - STEEL POSTS
		GUARD RAIL - DOUBLE FACE - WOOD POSTS
x x	x x	CHAIN LINK OR METAL FENCE
		WOOD FENCE
		HAY BALES/SILT FENCE
		TREE LINE
		SAWCUT LINE
		TOP OR BOTTOM OF SLOPE
		LIMIT OF EDGE OF PAVEMENT OR COLD PLANE AND OVERLAY
		BANK OF RIVER OR STREAM
		BORDER OF WETLAND
		100 FT WETLAND BUFFER
		200 FT RIVERFRONT BUFFER
		TOWN OR CITY LAYOUT
		TOWN OR CITY BOUNDARY LINE
		PROPERTY LINE OR APPROXIMATE PROPERTY LINE
		EASEMENT

TRAFFIC SYMBOLS

EXISTING	PROPOSED	DESCRIPTION
1	1	CONTROLLER PHASE ACTUATED
		TRAFFIC SIGNAL HEAD (SIZE AS NOTED)
		WIRE LOOP DETECTOR (6' x 6' TYP UNLESS OTHERWISE SPECIFIED)
		VIDEO DETECTION CAMERA
		MICROWAVE DETECTOR
		PEDESTRIAN PUSH BUTTON, SIGN (DIRECTIONAL ARROW AS SHOWN) AND SADDLE
	*	EMERGENCY PREEMPTION CONFIRMATION STROBE LIGHT
		VEHICULAR SIGNAL HEAD
		VEHICULAR SIGNAL HEAD, OPTICALLY PROGRAMMED
		FLASHING BEACON
		PEDESTRIAN SIGNAL HEAD, (TYPE AS NOTED OR AS SPECIFIED)
RRSG	RRSG	RAILROAD SIGNAL
OR		SIGNAL POST AND BASE (ALPHA-NUMERIC DESIGNATION NOTED)
	20'	MAST ARM, SHAFT AND BASE (ARM LENGTH AS NOTED)
		HIGH MAST POLE OR TOWER
		SIGN AND POST
		SIGN AND POST (2 POSTS)
	20'	MAST ARM WITH LUMINAIRE
		OPTICAL PRE-EMPTION DETECTOR
		CONTROL CABINET, GROUND MOUNTED
		CONTROL CABINET, POLE MOUNTED
		FLASHING BEACON CONTROL AND METER PEDESTAL
		LOAD CENTER ASSEMBLY
		PULL BOX 12"x12" (OR AS NOTED)
		ELECTRIC HANDHOLE 12"x24" (OR AS NOTED)
		TRAFFIC SIGNAL CONDUIT

PAVEMENT MARKINGS SYMBOLS

EXISTING	PROPOSED	DESCRIPTION
		PAVEMENT ARROW - WHITE
ONLY	ONLY	LEGEND "ONLY" - WHITE
	SL	STOP LINE
	CW	CROSSWALK
	SWL	SOLID WHITE LINE
	SYL	SOLID YELLOW LINE
	BWL	BROKEN WHITE LINE
	BYL	BROKEN YELLOW LINE
	DWL	DOTTED WHITE LINE
	DYL	DOTTED YELLOW LINE
	DWLEx	DOTTED WHITE LINE EXTENSION
	DYLEx	DOTTED YELLOW LINE EXTENSION
	DBWL	DOUBLE WHITE LINE
	DBYL	DOUBLE YELLOW LINE

ABBREVIATIONS

GENERAL

AADT	ANNUAL AVERAGE DAILY TRAFFIC
ABAN	ABANDON
ADJ	ADJUST
APPROX.	APPROXIMATE
A.C.	ASPHALT CONCRETE
ACCM PIPE	ASPHALT COATED CORRUGATED METAL PIPE
BIT.	BITUMINOUS
BC	BOTTOM OF CURB
BD.	BOUND
BL	BASELINE
BLDG	BUILDING
BM	BENCHMARK
BO	BY OTHERS
BOS	BOTTOM OF SLOPE
BR.	BRIDGE
CB	CATCH BASIN
CBCI	CATCH BASIN WITH CURB INLET
CC	CEMENT CONCRETE
CCM	CEMENT CONCRETE MASONRY
CEM	CEMENT
CI	CURB INLET
CIP	CAST IRON PIPE
CLF	CHAIN LINK FENCE
CL	CENTERLINE
CMP	CORRUGATED METAL PIPE
CSP	CORRUGATED STEEL PIPE
CO.	COUNTY
CONC	CONCRETE
CONT	CONTINUOUS
CONST	CONSTRUCTION
CR GR	CROWN GRADE
DHV	DESIGN HOURLY VOLUME
DI	DROP INLET
DIA	DIAMETER
DIP	DUCTILE IRON PIPE
DSMH	DRAIN SUMP MANHOLE
DMH	DRAIN MANHOLE
DW	STEADY DON'T WALK - PORTLAND ORANGE
DWY	DRIVEWAY
ELEV (or EL.)	ELEVATION
EMB	EMBANKMENT
EOP	EDGE OF PAVEMENT
EXIST (or EX)	EXISTING
EXC	EXCAVATION
F&C	FRAME AND COVER
F&G	FRAME AND GRATE
FDN.	FOUNDATION
FLDSTN	FIELDSTONE
GAR	GARAGE
GD	GROUND
GG	GAS GATE
GI	GUTTER INLET
GIP	GALVANIZED IRON PIPE
GRAN	GRANITE
GRAV	GRAVEL
GRD	GUARD
HDW	HEADWALL
HMA	HOT MIX ASPHALT
HOR	HORIZONTAL
HYD	HYDRANT
INV	INVERT
JCT	JUNCTION
L	LENGTH OF CURVE
LB	LEACH BASIN
LP	LIGHT POLE
LT	LEFT
MAX	MAXIMUM
MB	MAILBOX
MH	MANHOLE
MHB	MASSACHUSETTS HIGHWAY BOUND
MIN	MINIMUM
NIC	NOT IN CONTRACT
NO.	NUMBER
PC	POINT OF CURVATURE
PCC	POINT OF COMPOUND CURVATURE

ABBREVIATIONS (cont)

GENERAL

PDI	PLAZA DRAIN INLET
P.G.L.	PROFILE GRADE LINE
PI	POINT OF INTERSECTION
PM	PARKING METER
POC	POINT ON CURVE
POT	POINT ON TANGENT
PRC	POINT OF REVERSE CURVATURE
PROJ	PROJECT
PROP	PROPOSED
PSB	PLANTABLE SOIL BORROW
PT	POINT OF TANGENCY
PVC	POINT OF VERTICAL CURVATURE
PVI	POINT OF VERTICAL INTERSECTION
PVT	POINT OF VERTICAL TANGENCY
PVMT	PAVEMENT
PWW	PAVED WATER WAY
R&D	REMOVE AND DISCARD
R&R	REMOVE AND RESET
R&S	REMOVE AND STACK
RET	RETAIN
RT	RIGHT
SB	STONE BOUND
SBL	SEPARATE BIKE LANE
SHLD	SHOULDER
SMH	SEWER MANHOLE
ST	STREET
STA	STATION
SSD	STOPPING SIGHT DISTANCE
SHLO	STATE HIGHWAY LAYOUT LINE
SW	SIDEWALK
T	TANGENT DISTANCE OF CURVE/TRUCK %
TAN	TANGENT
TEMP	TEMPORARY
TC	TOP OF CURB
TOS	TOP OF SLOPE
TYP	TYPICAL
UP	UTILITY POLE
VAR	VARIES
VERT	VERTICAL
VC	VERTICAL CURVE
VGC	VERTICAL GRANITE CURB
WCR	WHEEL CHAIR RAMP
WG	WATER GATE
WIP	WROUGHT IRON PIPE
WM	WATER METER/WATER MAIN
X-SECT	CROSS SECTION

TRAFFIC SIGNAL ABBREVIATIONS

CAB	CABINET
CCVE	CLOSED CIRCUIT VIDEO EQUIPMENT
DW	STEADY UPRAISED HAND
FDW	FLASHING UPRAISED HAND
FR	FLASHING CIRCULAR RED
FRL	FLASHING RED LEFT ARROW
FRR	FLASHING RED RIGHT ARROW
FY	FLASHING CIRCULAR YELLOW
FYL	FLASHING YELLOW LEFT ARROW
FYR	FLASHING YELLOW RIGHT ARROW
G	STEADY CIRCULAR GREEN
GL	STEADY GREEN LEFT ARROW
GR	STEADY GREEN RIGHT ARROW
GSL	STEADY GREEN SLASH LEFT ARROW
GSR	STEADY GREEN SLASH RIGHT ARROW
GV	STEADY GREEN VERTICAL ARROW
OL	OVERLAP
PED	PEDESTRIAN
PTZ	PAN, TILT, ZOOM
R	STEADY CIRCULAR RED
RL	STEADY RED LEFT ARROW
RR	STEADY RED RIGHT ARROW
TR SIG	TRAFFIC SIGNAL
TSC	TRAFFIC SIGNAL CONDUIT
W	STEADY WALKING PERSON
Y	STEADY CIRCULAR YELLOW
YL	STEADY YELLOW LEFT ARROW

ISSUED FOR BID

HDR ENGINEERING, INC.
99 HIGH STREET, SUITE 2300
BOSTON, MASSACHUSETTS 02110-2378
(617) 357-7700

COMMONWEALTH OF MASSACHUSETTS
PHILIP FUSCO
CIVIL
No. 45868
REGISTERED PROFESSIONAL ENGINEER

Scale			
Date			
Job No.			
Designed by			
Drawn by			
Checked by	No.	Description	Date
Approved by	REVISIONS		

THE WORKS — CAMBRIDGE DEPARTMENT OF PUBLIC

Client: CITY OF CAMBRIDGE, MA

Project: RIVER STREET
INFRASTRUCTURE AND STREETSCAPE PROJECT

Drawing: **LEGEND AND ABBREVIATIONS**

Sheet: G-1.05

Total Sheets: 381

File No.

File: C:\PW\WORKING\EAST01\D0786396\7113XXX_(FRONT END SHEETS).DWG Plotted: 4/15/2022 3:40:02 PM

GENERAL NOTES

1. CONTRACTOR SHALL FIELD VERIFY EXISTING SITE CONDITIONS AND REPORT ANY DISCREPANCIES TO THE ENGINEER PRIOR TO COMMENCING WORK.
2. ALL UNDERGROUND UTILITIES ARE APPROXIMATE ONLY. CONTRACTOR SHALL FIELD VERIFY AND LOCATE ALL EXISTING UTILITIES, AND REPORT ANY DISCREPANCIES TO THE ENGINEER PRIOR TO COMMENCING WORK.
3. RIGHT-OF-WAY AND PROPERTY LINES SHOULD BE CONSIDERED APPROXIMATE IN LOCATION.
4. THE CONTRACTOR SHALL NOTIFY, IN WRITING, ALL UTILITY COMPANIES AND GOVERNMENT AGENCIES PRIOR TO EXCAVATION WORK AND CALL "DIG-SAFE" AT 1-800-322-4844, PRIOR TO COMMENCING WORK.
5. ALL FEES AND PERMITS SHALL BE PAID FOR BY THE CONTRACTOR.
6. THE CONTRACTOR SHALL SECURE THE WORK AREA AT THE END OF EACH WORK DAY.
7. CONTRACTOR SHALL RESTORE TO THEIR ORIGINAL CONDITION ANY AREAS ADJACENT TO AND OUTSIDE THE LIMIT OF WORK WHICH ARE DISTURBED DURING CONSTRUCTION, AT THE CONTRACTOR'S OWN EXPENSE.
8. UTILITY SERVICES SHALL BE MAINTAINED AT ALL TIMES.
9. CONTRACTOR SHALL SAWCUT ALL EDGES OF PAVING WHERE PAVEMENT IS TO BE REMOVED AND WHERE A NEW PAVEMENT IS TO ABUT EXISTING PAVEMENT.
10. CONTRACTOR SHALL PROVIDE EXPANSION JOINTS IN CONCRETE WALKS WHERE WALKS ABUT BUILDING WALLS, AND WHERE NEW WALKS ABUT EXISTING WALKS.
11. CONTRACTOR SHALL PROVIDE UNIFORM SLOPE BETWEEN SPOT GRADES AND CONTOURS.
12. CONTRACTOR SHALL ADJUST ALL EXISTING CITY OWNED UTILITY CASTINGS WITHIN LIMIT OF WORK TO LINE AND GRADE, UNLESS OTHERWISE NOTED. CONTRACTOR SHALL COORDINATE THE ADJUSTMENT OF ALL OTHER PRIVATELY OWNED UTILITIES AND SHALL PROVIDE AT MINIMIUM A ONE WEEK NOTICE OF WORK COMMENCING IN THE AREAS REQUIRING ADJUSTMENT.
13. CONTRACTOR SHALL PROVIDE A STAKED LAYOUT ON SITE FOR ENGINEER'S REVIEW PRIOR TO COMMENCING WORK.
14. LABELED DIMENSIONS SUPERSEDE SCALED DIMENSIONS FOR ALL LAYOUT WORK.
15. AT ALL LOCATIONS, STATION AND OFFSETS ARE GIVEN TO REVEAL SIDE OF CURB OR EDGE OF PAVEMENT AS APPROPRIATE. IN THE CASE OF FLUSH CURB, STATION AND OFFSETS ARE GIVEN TO THE "UP STATION" EDGE OF CURB.
16. ALL LINES ARE PARALLEL OR PERPENDICULAR UNLESS OTHERWISE INDICATED.
17. THE LIMIT OF WORK SHALL BE AT THE PROPERTY LINES UNLESS OTHERWISE DIRECTED BY THE ENGINEER.
18. "DON'T DUMP" PLACARDS SHALL BE INSTALLED AT ALL EXISTING AND PROPOSED CATCH BASINS WHICH ARE ADJACENT TO SIDEWALKS RECONSTRUCTED UNDER THIS CONTRACT. PLACARDS WILL BE FURNISHED BY THE CITY AT NO COST TO THE CONTRACTOR.
19. THE CONTRACTOR SHALL PROVIDE EROSION CONTROL AND SEDIMENT DEVICES, AND SHALL NOT COMMENCE CONSTRUCTION UNTIL THESE MEASURES HAVE BEEN INSTALLED AND APPROVED BY THE ENGINEER.

ROADWAY NOTES

1. WORK WITHIN PROJECT LIMITS SHALL MEET THE REQUIREMENTS OF THE CITY OF CAMBRIDGE DEPARTMENT OF PUBLIC WORKS.
2. ALL PROPOSED WORK SHALL BE COMPLETED WITHIN THE EXISTING RIGHT OF WAY LIMITS AND BACK OF EXISTING SIDEWALK UNLESS OTHERWISE NOTED OR APPROVED BY THE ENGINEER.
3. SEE DETAILS ON SHEETS RD-1.01 TO RD-1.10, FOR CURB INSTALLATION, PEDESTRIAN RAMP, DRIVEWAY, AND SIDEWALK CONSTRUCTION DETAILS.
4. ALL VERTICAL GRANITE CURBING WITHIN WORK LIMITS SHALL BE REMOVED AND STORED FOR FUTURE RESET ON THE PROJECT, AS APPROVED BY THE ENGINEER. LOCATIONS FOR THE RESET CURBS SHALL BE APPROVED BY THE ENGINEER. ANY EXISTING GRANITE CURBS NOT RE-USED ON THE PROJECT SHALL BE SALVAGED AND DELIVERED TO A LOCATION DETERMINED BY THE CITY OF CAMBRIDGE PUBLIC WORKS DEPARTMENT.
5. CONTRACTOR SHALL ADJUST TREE PIT OPENINGS AS NECESSARY TO MAINTAIN A MINIMUM AREA OF 12 SF FOR EXISTING TREES. AT EXISTING TREES A MINIMUM OF 3'-0" WIDE SIDEWALK SHALL BE MAINTAINED BETWEEN TREE PIT AND BACK OF SIDEWALK UNLESS SHOWN OTHERWISE. FOR NEW OR REPLACED TREES A MINIMUM OF 4'-0" WIDE SIDEWALK SHALL BE MAINTAINED BETWEEN TREE PIT AND BACK OF SIDEWALK UNLESS SHOWN OTHERWISE. EXISTING TREE PITS THAT ARE LESS THAN 5 FEET IN LENGTH (PARALLEL TO CURB) SHALL BE ADJUSTED TO A MINIMUM LENGTH OF 5'-0".
6. ALL EXISTING FEATURES AT BACK OF SIDEWALK SHALL REMAIN IN PLACE UNLESS OTHERWISE NOTED. DAMAGE OR DISLODGING OF EXISTING FEATURES AT BACK OF SIDEWALK SHALL BE REPAIRD/REPLACED AT NO ADDITIONAL COST TO THE OWNER.
7. CONTRACTOR SHALL MATCH EXISTING GRADE AT THE LIMIT OF PROPOSED SIDEWALK AND ROADWAY WORK. THE JOINT BETWEEN EXISTING AND PROPOSED PAVEMENT SHALL BE BE TREATED WITH INFRARED PAVEMENT SEALANT AND HOT POURED RUBBERIZED ASPHALT SEALER.
8. ALL EXISTING TREES AND SHRUBS SHALL BE RETAINED UNLESS OTHERWISE NOTED.
9. ALL EXISTING POSTS, METERS, AND SIGNS SHALL BE REMOVED AND RESET UNLESS OTHERWISE DETERMINED BY THE CITY OF CAMBRIDGE PUBLIC WORKS DEPARTMENT.
10. ALL PROPOSED SIGNS SHALL BE ERECTED IN ACCORDANCE WITH THE 2009 MUTCD AND LOCATED TO PROVIDE A MINIMUM LATERAL CLEARANCE OF 2' FROM EDGE OF PAVEMENT.
11. ALL SITE FEATURES WHICH ARE TO BE DISPOSED OF, INCLUDING EXISTING PAVEMENT, SHALL BE DISPOSED OF IN ACCORDANCE WITH ALL LOCAL, STATE AND FEDERAL REGULATIONS. DISPOSAL COSTS SHALL BE INCIDENTAL TO THE VARIOUS CONTRACT ITEMS WITH NO ADDITIONAL PAYMENT PROVIDED.
12. ALL EXISTING FEATURES WHICH ARE "TO REMAIN" AND WHICH ARE DISTURBED BY THE CONTRACTOR SHALL BE RESTORED TO THEIR ORIGINAL CONDITION AT THE CONTRACTOR'S EXPENSE, INCLUDING BUT NOT LIMITED TO EXISTING CURB, SIDEWALK, ROADWAY LIGHTING, BOUNDS OR PROPERTY MARKERS, HYDRANTS AND UTILITIES.
13. ALL RIMS, COVERS, GRATES AND OTHER CASTINGS OF EXISTING MUNICIPAL UTILITIES THAT ARE LOCATED WITHIN THE LIMIT OF WORK IN AREAS OF RECONSTRUCTED ROADWAY AND SIDEWALKS SHALL BE ADJUSTED TO MATCH FINAL GRADE. ALL PRIVATE UTILITY CASTINGS SHALL BE ADJUSTED OR REMOVED BY OTHERS. CASTINGS SHALL BE ADJUSTED MULTIPLE TIMES TO FACILITATE SEQUENCE OF WORK INCLUDING AT RAISED CROSSWALKS AND INTERSECTIONS.
14. ALL BASELINE TIES FOR CURB CORNERS AND RADII ARE TO THE P.C.'S OR P.T.'S UNLESS OTHERWISE NOTED. WHERE PROPOSED GRANITE CURBING MEETS EXISTING CURBING OR EXISTING ROADWAY OR DRIVEWAY PAVEMENT EDGES, MINOR FIELD ADJUSTMENTS TO THE DESIGNATED STATION OF THE P.C. OR P.T. FOR THE PROPOSED CURBING AND ELEVATION MAY BE REQUIRED.
15. ALL LENGTHS AND QUANTITIES SHOWN ON THE PLANS ARE FOR REFERENCE PURPOSES ONLY. CONTRACTOR SHALL BE RESPONSIBLE FOR VERIFYING ALL QUANTITIES FOR BIDDING PURPOSES.

MAINTENANCE OF TRAFFIC

1. WHEN WORKING WITHIN OR DIRECTLY ADJACENT TO EXISTING ROADWAYS, CITY OF CAMBRIDGE POLICE OFFICERS MUST BE PRESENT TO DIRECT TRAFFIC AWAY FROM WORK ZONES.
2. THE CONTRACTOR SHALL BE RESPONSIBLE FOR SUBMITTING, FOR REVIEW AND APPROVAL BY THE ENGINEER, DETAILED PLANS SHOWING THE MAINTENANCE OF TRAFFIC DURING CONSTRUCTION IN EXISTING ROADWAYS, USING REFLECTORIZED DRUMS, TEMPORARY CONCRETE BARRIERS, ARROW PANELS, VARIABLE MESSAGE SIGNS, AND TEMPORARY SIGNAGE AND MARKINGS. ALL TEMPORARY TRAFFIC CONTROL DEVICES SHALL BE DESIGNED, INSTALLED AND MAINTAINED IN ACCORDANCE WITH THE REQUIREMENTS OF CURRENT MANUAL ON UNIFORM TRAFFIC CONTROL DEVICES (MUTCD). THE CONTRACTOR SHALL COORDINATE THE MAINTENANCE OF TRAFFIC OPERATIONS WITH THE CAMBRIDGE TRAFFIC, PARKING AND TRANSPORTATION DEPARTMENT, BOSTON TRANSPORTATION DEPARTMENT, SOMERVILLE TRANSPORTATION DEPARTMENT, DEPARTMENT OF CONSERVATION AND RECREATION, MASSACHUSETTS DEPARTMENT OF TRANSPORTATION , AND WITH ANY ADJACENT CONSTRUCTION PROJECTS.
3. ALL EXISTING PAVEMENT MARKINGS AND/OR SIGNAGE AFFECTED BY CONTRACTOR OPERATIONS SHALL BE RESTORED TO THEIR ORIGINAL CONDITION AT THE CONTRACTOR'S EXPENSE.

TRAFFIC NOTES

1. ALL SIGNS SHALL HAVE A 2' MINIMUM CLEARANCE BETWEEN THE EDGE OF SIGN AND THE EDGE OF FINISHED PAVEMENT.
2. ALL SIGNS SHALL HAVE A 7' MINIMUM VERTICAL CLEARANCE BETWEEN THE BOTTOM OF THE SIGN AND THE TOP OF THE FINISHED SIDEWALK GRADE.
3. ALL PAVEMENT MARKINGS SHALL BE THERMOPLASTIC UNLESS OTHERWISE NOTED.
4. PROPOSED PAVEMENT MARKINGS SHALL BE INSTALLED IN ACCORDANCE WITH THE 2009 MUTCD & MASSDOT CONSTRUCTION AND TRAFFIC STANDARD DETAILS, AS AMENDED.
5. UNLESS OTHERWISE NOTED, ALL POSTS TO BE P-5.
6. CONTRACTOR SHALL COORDINATE WITH MBTA FOR BUS ROUTE NUMBERS AND DETOURS, AND BE RESPONSIBLE FOR POSTING ALL ASSOCIATED SIGNAGE.
7. REMOVE EXISTING CROSSWALKS AND STOP LINES WITHIN LIMITS OF PROPOSED WORK.

SURVEY NOTES

1. EXISTING TOPOGRAPHIC AND SITE UTILITY INFORMATION IS BASED ON THE FOLLOWING SOURCES:
   A. THE GROUND FIELD SURVEY WAS CONDUCTED BY FELDMAN LAND SURVEYORS ON THE MONTH OF DECEMBER 2018, SEPTEMBER 2019, AND MAY 24, 2021.
   B. THE HORIZONTAL DATUM SHOWN HEREON REFERENCES THE NORTH AMERICAN DATUM OF 1983, NAD83/2011 (EPOCH 2010.00), AS DERIVED FROM A POST PROCESSING SOLUTION FROM THE TRIMBLE BUSINESS CENTER RTX ADJUSTMENT USING THE PUBLISHED VALUE OF KeyNetGPS STATIONS CP01, NHUN, KP16 AND KP19.
   C. THE VERTICAL DATUM SHOWN HEREON ARE REFERENCED TO THE CITY OF CAMBRIDGE VERTICAL DATUM BASED ON A CONVERSION FROM NAVD88 USING THE PUBLISHED DIFFERENCE OF 11.66'.
   D. CITY OF CAMBRIDGE GIS DATABASE RESOURCES WERE USED TO SUPPLEMENT PLANIMETRIC DATA AND PUBLIC UTILITY LOCATIONS.

SUBSURFACE UTILITY ENGINEERING NOTES:

1. THIS PLAN WAS PREPARED IN CONFORMANCE WITH THE AMERICAN SOCIETY OF CIVIL ENGINEERS STANDARD CI/ASCE 38-02 "STANDARD GUIDELINE FOR THE COLLECTION AND DEPICTION OF EXISTING SUBSURFACE UTILITY DATA".
2. BSIE WILL ONLY WARRANT THE EXISTENCE OR NONEXISTENCE OF UTILITY LINES BASED ON QUALITY LEVEL A INFORMATION. QL "A" INFORMATION IS ONLY VALID WITHIN THE VISIBLE LIMITS OF THE TEST HOLE.
3. BSIE WILL ADVANCE A VACUUM TEST HOLE UNTIL A CONDITION OF PRACTICAL REFUSAL FOR VACUUM EXCAVATION IS REACHED. PRACTICAL REFUSAL IS DEFINED AS ANY OF THE FOLLOWING CONDITIONS OCCURRING: ENCOUNTERING A UTILITY, BEDROCK, WATER TABLE, ROCKS/COBBLES, CONDITION OF HOLE INSTABILITY OR REACHING A DEPTH OF 8'.
4. BELOW GROUND STRUCTURES, UNLESS DIMENSIONED, ARE SYMBOLIC ONLY.
5. PRIOR TO EXCAVATION UTILITY OWNERS SHALL REVIEW AND APPROVE THIS DRAWING.
6. THIS DRAWING IS PREPARED IN COLOR. REPRODUCTION MAY ALTER THE INFORMATION CONTAINED HEAR IN. BSIE DOES NOT WARRANT THE INFORMATION CONTAINED HEAR IN FOLLOWING REPRODUCTION.
7. USE OR REUSE OF THIS DRAWING BY PARTIES NOT DIRECTLY CONTRACTED WITH BSIE IS PROHIBITED WITHOUT PRIOR WRITTEN PERMISSION.
8. BASE MAPPING/SURVEY CONTROL IS SHOWN FOR INFORMATION PURPOSES ONLY AND IS NOT WARRANTED BY BSIE.
9. BSIE RECOMMENDS THAT ALL EXISTING UTILITIES NEAR PROPOSED CONSTRUCTION ACTIVITIES BE LOCATED BY VACUUM EXCAVATION (QUALITY LEVEL A) PRIOR TO ANY EXCAVATION (IF NOT ALREADY LOCATED BY VACUUM EXCAVATION).
10. THE RECORD UTILITIES AS DEPICTED ON THE BASE PLANS ARE TO BE UPDATED BASED ON ANY FIELD VERIFICATIONS.

UTILITY QUALITY LEVEL INFORMATION INDEX (SEE ASCE/CI 38-02):

1. QUALITY LEVEL D: "QL D". UTILITY INFORMATION PLOTTED ON THE DRAWING BASED SOLELY ON RECORD INFORMATION, INDIVIDUAL RECOLLECTIONS OR THE EXISTENCE OF UTILITY SERVICE. IT SHALL BE NOTED THAT ALL INFORMATION SHOWN (OTHER THAN AT TEST HOLE LOCATIONS, SEE QL A BELOW), INCLUDING BUT NOT LIMITED TO A UTILITIES SIZE, CAPACITY, MATERIAL COMPOSITION, CONDITION OR SERVICE STATUS SHALL BE CONSIDERED QL D EVEN THOUGH THE UTILITY MAY BE PLOTTED AND LABELED AS QL C OR QL B.
2. QUALITY LEVEL C: "QL C". UTILITY INFORMATION OBTAINED AND CATEGORIZED AS QL D, PLOTTED TO CORRELATE WITH SURFACE UTILITY FEATURES WHICH HAVE BEEN FIELD VERIFIED, SURVEY LOCATED AND ACCURATELY TRANSPOSED ONTO THE DESIGN/CONSTRUCTION DOCUMENTS. INCLUDED IN THIS CATEGORY AERIAL UTILITY INFORMATION AND UTILITY DEPICTION'S, WHICH IN THE PROFESSIONAL OPINION OF THE SUBSURFACE UTILITY ENGINEER, REPRESENT THE MOST PROBABLE APPROXIMATE HORIZONTAL LOCATION, TYPE AND/OR EXISTENCE OF A UTILITY.
3. QUALITY LEVEL B: "QL B". UTILITY INFORMATION DERIVED BY ESTABLISHING THE APPROXIMATE SURFACE HORIZONTAL LOCATION OF A UTILITY USING ELECTRONIC METHODS. SAID INFORMATION IS SUBSEQUENTLY FIELD SURVEY LOCATED AND ACCURATELY REDUCED ONTO THE DESIGN/CONSTRUCTION DOCUMENTS.
4. QUALITY LEVEL A: "QL A". UTILITY INFORMATION WHICH HAS BEEN VISUALLY VERIFIED, SURVEY LOCATED (BOTH HORIZONTALLY AND VERTICALLY) AND ACCURATELY REDUCED ONTO THE DESIGN/CONSTRUCTION DOCUMENTS. THIS IS TYPICALLY SHOWN AS TEST HOLE OR OTHER DIMENSIONED INFORMATION.

SUE GENERAL NOTES:

1. CERTAIN UTILITIES SHOWN HAVE BEEN TRACED ON THE GROUND USING ELECTRONIC DESIGNATION TECHNIQUES. DESIGNATION, OR ELECTRONIC UTILITY LOCATION, IS DEFINED AS THE SURFACE LOCATION OF A UTILITY LINE BASED ON ELECTRONIC GEOPHYSICAL PROSPECTING TECHNIQUES AND IS APPROXIMATE IN RELATION TO THE ACTUAL LOCATION OF THE POSSIBLE UTILITY.
2. CERTAIN UTILITIES SHOWN HAVE BEEN TAKEN FROM AVAILABLE RECORD INFORMATION. THESE UTILITIES MAY NOT HAVE BEEN VERIFIED. (SEE NOTE #4 BELOW.)
3. ALL EXISTING DESIGNATED UTILITIES NEAR PROPOSED CONSTRUCTION SHOULD BE EXACTLY LOCATED USING NON-DESTRUCTIVE AIR-VACUUM EXCAVATION, IF NOT ALREADY LOCATED BY AIR-VACUUM EXCAVATION (SEE QUALITY LEVEL A ABOVE).
4. UNLESS NON-DESTRUCTIVE AIR-VACUUM EXCAVATION IS UTILIZED AT A PARTICULAR LOCATION, BSIE DOES NOT GUARANTEE THE EXISTENCE OR NON-EXISTENCE OF UTILITY LINES
5. AT LOCATIONS, WHERE BSIE IS DIRECTED TO PERFORM NON-DESTRUCTIVE AIR-VACUUM EXCAVATION, THE TEST HOLE IS ADVANCED UNTIL A CONDITION OF PRACTICAL REFUSAL FOR AIR-VACUUM EXCAVATION IS REACHED OR HOLE IS ADVANCED TO A DEPTH OF 8.0' (EIGHT FEET). PRACTICAL REFUSAL BEING DEFINED AS ENCOUNTERING A UTILITY, BEDROCK, WATER TABLE, LARGE ROCKS/ COBBLES, SUSPECTED HAZARDOUS MATERIALS OR A CONDITION OF HOLE INSTABILITY.
6. PRIOR TO ANY EXCAVATING, CONTRACTORS SHOULD REVIEW THIS DRAWING FOR ACCURACY AND COMPLETENESS.

ISSUED FOR BID

HDR ENGINEERING, INC.
99 HIGH STREET, SUITE 2300
BOSTON, MASSACHUSETTS 02110-2378
(617) 357-7700

COMMONWEALTH OF MASSACHUSETTS
PHILIP FUSCO
CIVIL
No. 45868
REGISTERED PROFESSIONAL ENGINEER

Scale			
Date			
Job No.			
Designed by			
Drawn by			
Checked by	No.	Description	Date
Approved by	REVISIONS		

THE WORKS — CAMBRIDGE DEPARTMENT OF PUBLIC

Client	CITY OF CAMBRIDGE, MA	Sheet	G-1.06
Project	RIVER STREET INFRASTRUCTURE AND STREETSCAPE PROJECT	Total Sheets	381
Drawing	**GENERAL NOTES**	File No.	

File: C:\PWWORKINGIEAST01\D0786396\I7113XXX_(FRONT END SHEETS).DWG Plotted: 5/3/2022 8:08:10 AM

BORING LEGEND:

B	BORING, GEI SEPTEMBER 2019
MW	MONITORING WELL, GEI 2019
PC	PAVEMENT CORING, GEI 2019

LEGEND

EX-1.XX:	EXISTING CONDITIONS PLANS
C-1.XX:	CIVIL CONSTRUCTION PLANS AND PROFILES
U-1.XX:	UTILITY COORDINATION PLANS
R-1.XX:	ROADWAY CONSTRUCTION PLANS
R-2.XX:	ROADWAY CURB TIE AND ALIGNMENT PLANS
R-3.XX:	ROADWAY GRADING PLANS AND PROFILES
E-1.XX:	STREET LIGHTING PLANS
TR-1.XX:	SIGNS AND PAVEMENT MARKINGS PLANS
TR-2-XX:	SIGNAL PLANS
L-1.XX:	STREETSCAPE MATERIALS AND STREET TREE PIT LAYOUT PLANS
(T)	MBTA BUS STOP / SUBWAY HEADHOUSE ENTRANCE

N

WESTERN AVE BRIDGE

WESTERN AVE

BLACKSTONE ST

69+11.64

TR-1.09 L-1.09 L-2.09

R-1.09 R-2.09 R-3.09 E-1.09

EX-1.09 DP-1.09 C-1.09 U-1.09

TR-1.08 L-1.08 L-2.08

R-1.08 R-2.08 R-3.08 E-1.08

EX-1.08 DP-1.08 C-1.08 U-1.08

CHARLES RIVER

RIVERSIDE PRESS PARK

PUTNAM AVE

HOYT FIELD

MONTAGUE ST

MILDRED HAMILTON PL

HOWARD ST

JAY ST

EX-1.01	R-1.01	TR-1.01
DP-1.01	R-2.01	L-1.01
C-1.01	R-3.01	L-2.01
U-1.01	E-1.01	

EX-1.02	R-1.02	TR-1.02
DP-1.02	R-2.02	L-1.02
C-1.02	R-3.02	L-2.02
U-1.02	E-1.02	TR-2.01

EX-1.03	R-1.03	TR-1.03
DP-1.03	R-2.03	L-1.03
C-1.03	R-3.03	L-2.03
U-1.03	E-1.03	

EX-1.04	R-1.04	TR-1.04
DP-1.04	R-2.04	L-1.04
C-1.04	R-3.04	L-2.04
U-1.04	E-1.04	TR-2.02

10+00 11 12 13 14 15 16 17 18 19 20 21 22 23 24 25 26 27 28 29 30 31

60+00 70+00 71+40

PC1 PC2 PC3 PC4 PC5A PC5B PC6 PC7 PC8

MW101 MW102

B1 B2 B3 B4 B5 B6 B7 B8 B11/PC12

RIVER ST BRIDGE

RIVER ST (T)

MEMORIAL DRIVE

FAIRMONT AVE

FAIRMONT ST

ROCKWELL ST

LAUREL ST

KELLY RD

PLEASANT ST

FIRE STATION

TRAFFIC SIGNAL LAYOUT PLAN AND DATA PLAN AT RIVER STREET AND PUTNAM STREET

TRAFFIC SIGNAL LAYOUT PLAN AND DATA PLAN AT RIVER STREET AND HOWARD STREET

SEE SHEET G-1.06

KEY PLAN

SEE SHEET G-1.06A

0 80 200 300

SCALE: 1" = 80'

ISSUED FOR BID

File: C:\PW\WORKING\EAST01\D0786396\7113XXX_(KEY PLAN).DWG Plotted: 4/15/2022 3:40:19 PM

HDR ENGINEERING, INC.
99 HIGH STREET, SUITE 2300
BOSTON, MASSACHUSETTS 02110–2378
(617) 357–7700

COMMONWEALTH OF MASSACHUSETTS
PHILIP FUSCO
CIVIL
No. 45868
REGISTERED PROFESSIONAL ENGINEER

Scale			
Date			
Job No.			
Designed by			
Drawn by			
Checked by	No.	Description	Date
Approved by	REVISIONS		

THE WORKS — CAMBRIDGE DEPARTMENT OF PUBLIC

Client: CITY OF CAMBRIDGE, MA	Sheet: G-1.07
Project: RIVER STREET INFRASTRUCTURE AND STREETSCAPE PROJECT	Total Sheets: 381
Drawing: **KEY PLAN - 1**	File No.

BORING LEGEND:

- B — BORING, GEI SEPTEMBER 2019
- MW — MONITORING WELL, GEI 2019
- PC — PAVEMENT CORING, GEI 2019

LEGEND

EX-1.XX:	EXISTING CONDITIONS PLANS
C-1.XX:	CIVIL CONSTRUCTION PLANS AND PROFILES
U-1.XX:	UTILITY COORDINATION PLANS
R-1.XX:	ROADWAY CONSTRUCTION PLANS
R-2.XX:	ROADWAY CURB TIE AND ALIGNMENT PLANS
R-3.XX:	ROADWAY GRADING PLANS AND PROFILES
E-1.XX:	STREET LIGHTING PLANS
TR-1.XX:	SIGNS AND PAVEMENT MARKINGS PLANS
TR-2-XX:	SIGNAL PLANS
L-1.XX:	STREETSCAPE MATERIALS AND STREET TREE PIT LAYOUT PLANS

(T) MBTA BUS STOP / SUBWAY HEADHOUSE ENTRANCE

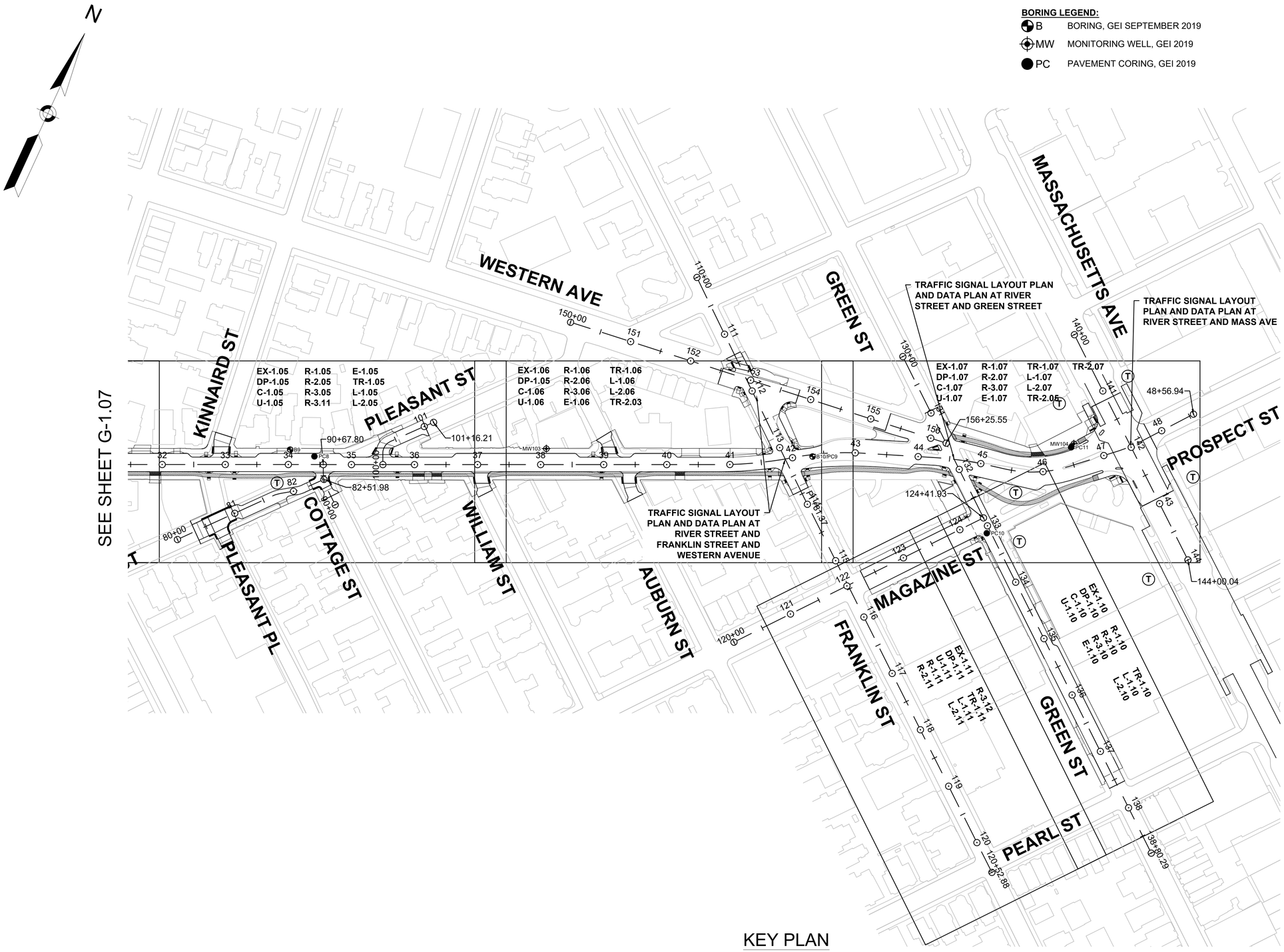

KEY PLAN

0 80 200 300

SCALE: 1" = 80'

ISSUED FOR BID

HDR ENGINEERING, INC.
99 HIGH STREET, SUITE 2300
BOSTON, MASSACHUSETTS 02110–2378
(617) 357–7700

COMMONWEALTH OF MASSACHUSETTS
PHILIP FUSCO CIVIL No. 45868
REGISTERED PROFESSIONAL ENGINEER

Scale			
Date			
Job No.			
Designed by			
Drawn by			
Checked by	No.	Description	Date
Approved by	REVISIONS		

THE WORKS — CAMBRIDGE DEPARTMENT OF PUBLIC WORKS

Client	CITY OF CAMBRIDGE, MA	Sheet	G-1.08
Project	RIVER STREET INFRASTRUCTURE AND STREETSCAPE PROJECT	Total Sheets	381
Drawing	**KEY PLAN - 2**	File No.	

File: C:\PWWORKING\EAST01\D0786396\7113XXX_(KEY PLAN).DWG Plotted: 4/15/2022 3:40:23 PM

Sample ID	Pavement Thickness (in.)	Photo	Other Notes
PC1	8.50		Asphalt only
PC2	8.63		Asphalt only
PC3	7.25		Asphalt only
PC4	2.88		Asphalt only

Sample ID	Pavement Thickness (in.)	Photo	Other Notes
PC5	5.50		Asphalt only
PC6	8.50		Asphalt only
PC7	7.25		Asphalt only
PC8	7.50		Asphalt only

Sample ID	Pavement Thickness (in.)	Photo	Other Notes
PC9	13.00		Asphalt only
PC10	4.50		Gravel subgrade, asphalt
PC11	7.50		Asphalt only
PC12	4.00		Asphalt only

HDR ENGINEERING, INC.
99 HIGH STREET, SUITE 2300
BOSTON, MASSACHUSETTS 02110–2378
(617) 357–7700

GEI Consultants

PHILIP FUSCO CIVIL No. 45868 REGISTERED PROFESSIONAL ENGINEER
COMMONWEALTH OF MASSACHUSETTS

Scale			
Date			
Job No.			
Designed by			
Drawn by			
Checked by	No.	Description	Date
Approved by	REVISIONS		

THE WORKS
CAMBRIDGE DEPARTMENT OF PUBLIC

ISSUED FOR BID

Client: CITY OF CAMBRIDGE, MA

Project: RIVER STREET
INFRASTRUCTURE AND STREETSCAPE PROJECT

Drawing: **PAVEMENT CORES**

Sheet: G-1.09

Total Sheets: 381

File No.

File: C:\PWWORKING\EAST01\D0786396\I7113XXX_(PAVEMENT CORES).DWG Plotted: 4/15/2022 3:40:31 PM

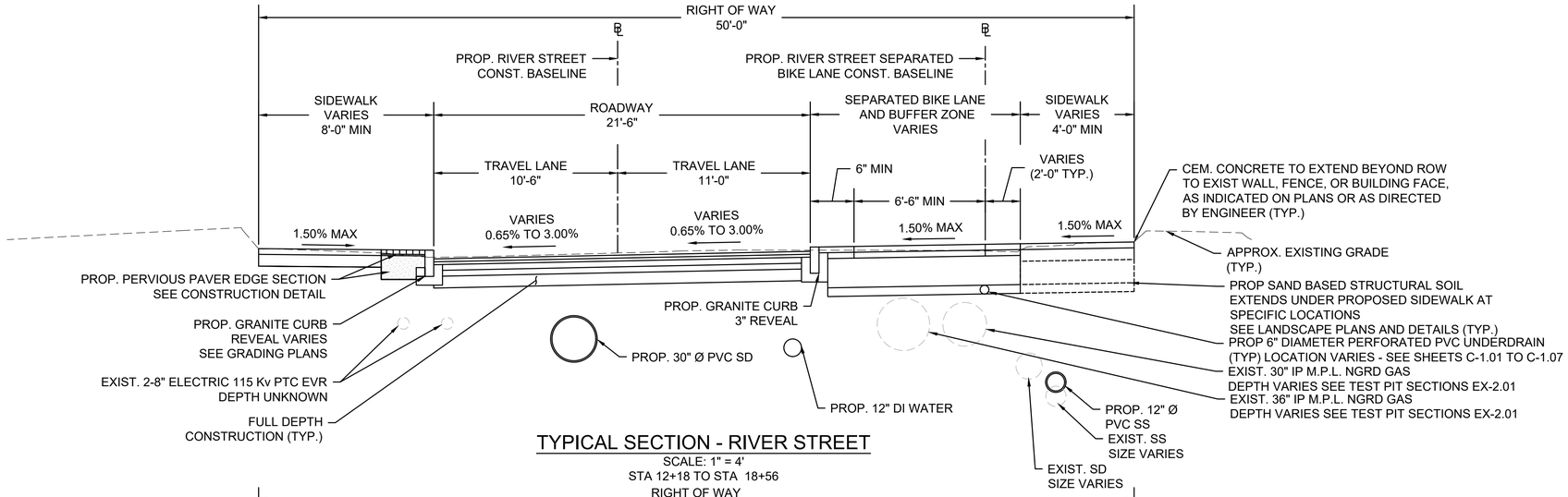

TYPICAL SECTION - RIVER STREET

SCALE: 1" = 4'
STA 12+18 TO STA 18+56

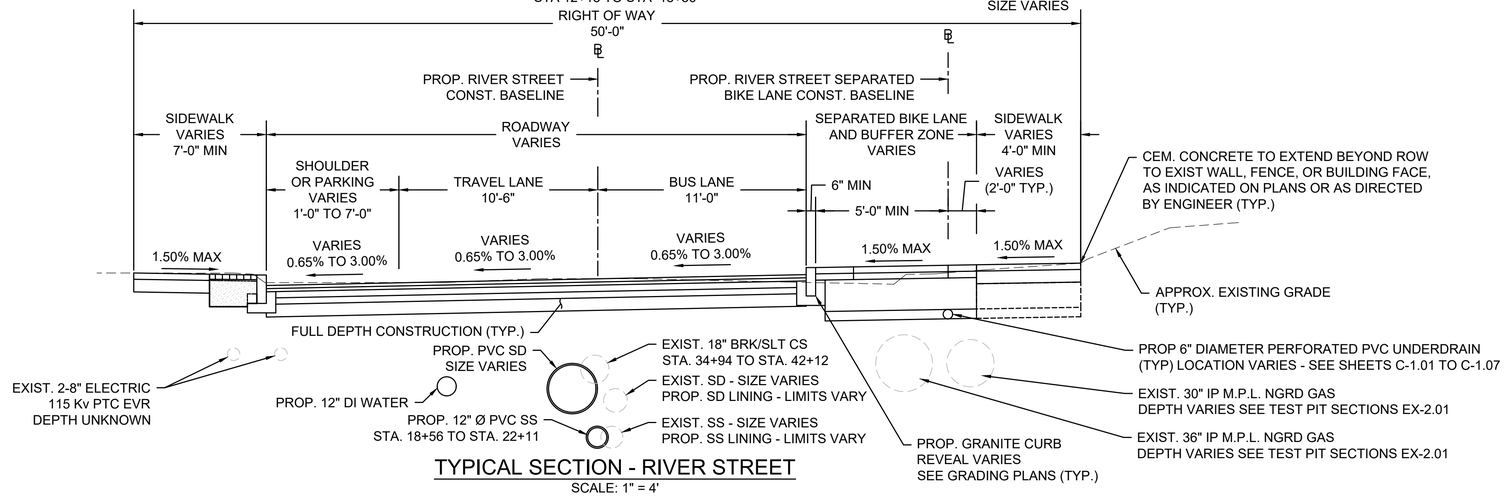

TYPICAL SECTION - RIVER STREET

SCALE: 1" = 4'
STA 18+56 TO STA 25+85
STA 31+25 TO STA 42+12

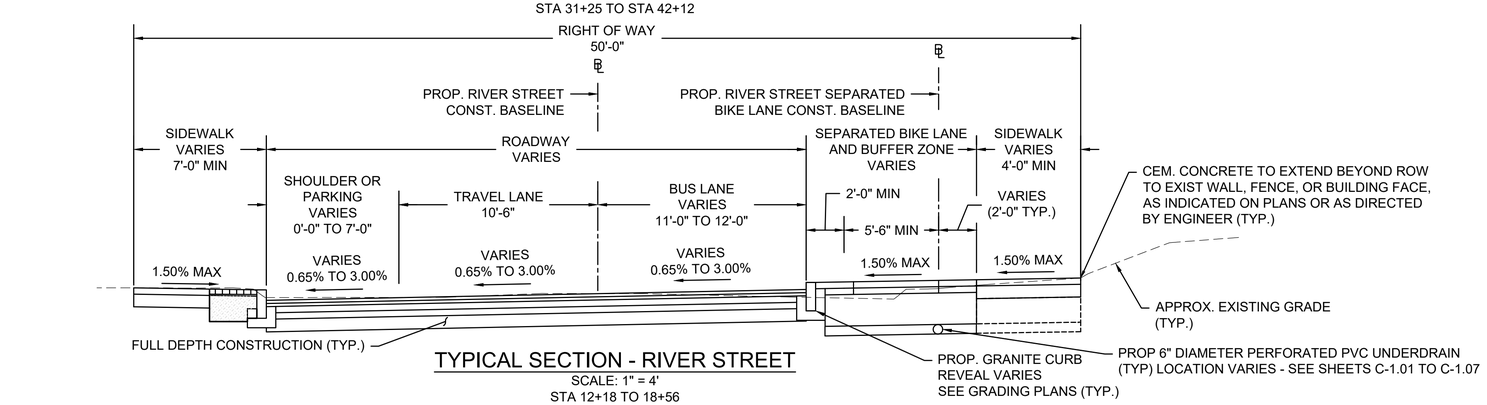

TYPICAL SECTION - RIVER STREET

SCALE: 1" = 4'
STA 12+18 TO 18+56

PAVEMENT NOTES

PROPOSED MILLING & HMA OVERLAY

MILLING: 2" MILLING

SURFACE: 2" HOT MIX ASPHALT TOP COURSE 12.5 (SSC-12.5)

PROPOSED FULL-DEPTH CONSTRUCTION

SURFACE: 2" HMA MODIFIED TOP COURSE MATERIAL
2" HMA BINDER COURSE MATERIAL

BASE: 4" HMA BASE COURSE MATERIAL

SUBBASE: 4" DENSE GRADE CRUSHED STONE FOR SUB-BASE OVER 8" GRAVEL BORROW, TYPE B OVER COMPACTED SUBGRADE

ASPHALT EMULSION FOR TACK COAT

ASPHALT ELMUSION FOR TACK COAT SHALL BE PLACED ON ALL MILLED SURFACES (APPLICATION RATE = 0.07 GAL/SY) AND BETWEEN ALL NEW PAVEMENT LAYERS (APPLICATION RATE = 0.05 GAL/SY)

CEMENT CONCRETE SIDEWALK

SURFACE: 4" CEMENT CONCRETE (4,000 PSI, $\frac{3}{4}$", 610) OVER

SUBBASE: 8" GRAVEL BORROW, TYPE B

CEMENT CONCRETE WHEELCHAIR RAMP, DRIVEWAY, AND AT INTERSECTIONS

SURFACE: 6" CEMENT CONCRETE (4,000 PSI, $\frac{3}{4}$", 610) OVER

SUBBASE: 8" GRAVEL BORROW, TYPE B

CEMENT CONCRETE DRIVEWAY AT FIRE STATION

SURFACE: 6" REINFORCED CEMENT CONCRETE (4,000 PSI, $\frac{3}{4}$", 610) OVER

SUBBASE: 8" GRAVEL BORROW, TYPE B

CEMENT CONCRETE BUFFER ZONE

SURFACE: 4" CEMENT CONCRETE (4,000 PSI, $\frac{3}{4}$", 610) OVER

BASE: 4" CRUSHED STONE

SUBBASE: 20" SAND BASED STRUCTURAL SOIL

PROPOSED IMPERVIOUS SEPARATED BIKE LANE (AT FIRE STATION)

SURFACE: 2" HOT MIX ASPHALT TOP COURSE 12.5 (SSC-12.5)
2" HOT MIX ASPHALT INTERMEDIATE BASE COURSE

BASE: 3" HOT MIX ASPHALT BASE COURSE

SUBBASE: 6" GRAVEL BORROW, TYPE B

PROPOSED PERVIOUS SEPARATED BIKE LANE

SURFACE: 4" HOT MIX ASPHALT OPEN GRADED FRICTION COURSE

BASE: 6" CHOKER COURSE
20" RESERVOIR COURSE

SUBBASE: 6" SAND DRAINAGE LAYER

NOTES:

1. SEE SPECIFICATIONS REGARDING RE-USE OF EXISTING CONCRETE AND ASPHALT MATERIALS IN SUBBASE.
2. REFER TO STREETSCAPE PLANS FOR TREE PIT SECTIONS.
3. SEE SPECIFICATIONS FOR MAKEUP OF PROPOSED PERVIOUS SEPARATED BIKE LANE, INCLUDING AGGREGATE SIZES FOR CHOKER COURSE, HMA OPEN GRADED FRICTION COURSE, AND GEOTEXTILE. SEE SPECIFICATIONS FOR SAND BASED STRUCTURAL SOIL AND SAND DRAINAGE LAYER.
4. SELECT EXISTING AND PROPOSED UTILITIES SHOWN FOR EMPHASIS. NOT ALL UTILITIES SHOWN. LOCATION AND DEPTH ARE APPROXIMATE AND SHOWN FOR ILLUSTRATIVE PURPOSES. REFER TO EXISTING CONDITIONS PLAN, SUE PLAN, CIVIL CONSTRUCTION PLAN AND PROFILE, AND UTILITY COORDINATION PLAN FOR ADDITIONAL EXISTING AND PROPOSED UTILITY INFORMATION.
5. SAND BASED STRUCTURAL SOIL TO BE PLACED AT PROPOSED TREE PIT LOCATIONS PER CITY OF CAMBRIDGE STANDARD AND AS SHOWN ON THE LANDSCAPE PLANTING PLANS.

ISSUED FOR BID

HDR ENGINEERING, INC.
99 HIGH STREET, SUITE 2300
BOSTON, MASSACHUSETTS 02110-2378
(617) 357-7700

COMMONWEALTH OF MASSACHUSETTS
PHILIP FUSCO
CIVIL
No. 45868
REGISTERED PROFESSIONAL ENGINEER

Scale			
Date			
Job No.			
Designed by			
Drawn by			
Checked by	No.	Description	Date
Approved by	REVISIONS		

THE WORKS — CAMBRIDGE DEPARTMENT OF PUBLIC

Client: CITY OF CAMBRIDGE, MA

Project: RIVER STREET
INFRASTRUCTURE AND STREETSCAPE PROJECT

Drawing: **TYPICAL SECTIONS - 1**

Sheet: G-2.01

Total Sheets: 381

File No.

File: C:\PW\WORKING\EAST01\D07863961\7113XXX_(TYPICAL SECTIONS).DWG Plotted: 4/15/2022 2:14:41 PM

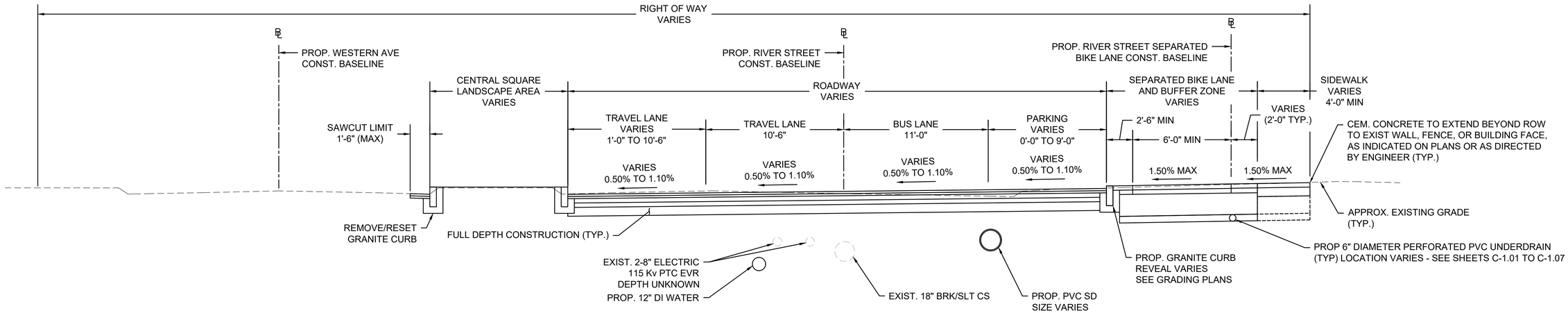

TYPICAL SECTION - RIVER STREET

SCALE: 1" = 4'
STA 42+12 TO STA 43+80

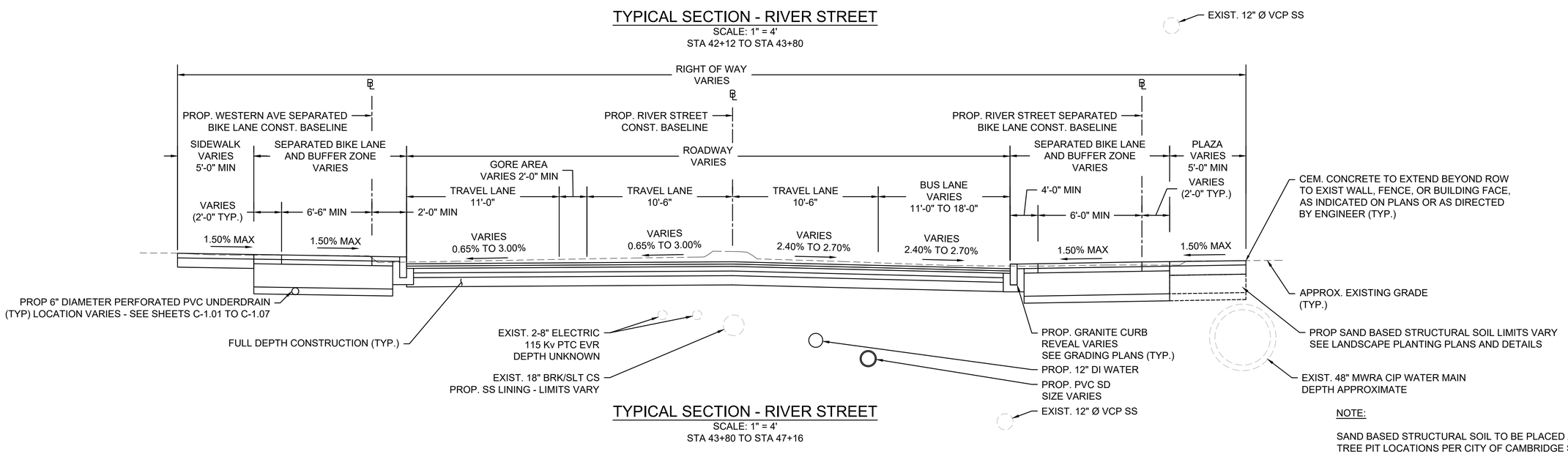

TYPICAL SECTION - RIVER STREET

SCALE: 1" = 4'
STA 43+80 TO STA 47+16

NOTE:

SAND BASED STRUCTURAL SOIL TO BE PLACED AT PROPOSED TREE PIT LOCATIONS PER CITY OF CAMBRIDGE STANDARD AND AS SHOWN ON THE LANDSCAPE PLANTING PLANS.

ISSUED FOR BID

HDR ENGINEERING, INC.
99 HIGH STREET, SUITE 2300
BOSTON, MASSACHUSETTS 02110–2378
(617) 357–7700

COMMONWEALTH OF MASSACHUSETTS
PHILIP FUSCO CIVIL No. 45868
REGISTERED PROFESSIONAL ENGINEER

Scale			
Date			
Job No.			
Designed by			
Drawn by			
Checked by	No.	Description	Date
Approved by	REVISIONS		

CAMBRIDGE DEPARTMENT OF PUBLIC WORKS

Client	CITY OF CAMBRIDGE, MA	Sheet	G-2.02
Project	RIVER STREET INFRASTRUCTURE AND STREETSCAPE PROJECT	Total Sheets	381
Drawing	**TYPICAL SECTIONS - 2**	File No.	

File: C:\PW\WORKING\EAST01\D0786396\7113XXX_(TYPICAL SECTIONS).DWG Plotted: 4/15/2022 2:14:46 PM

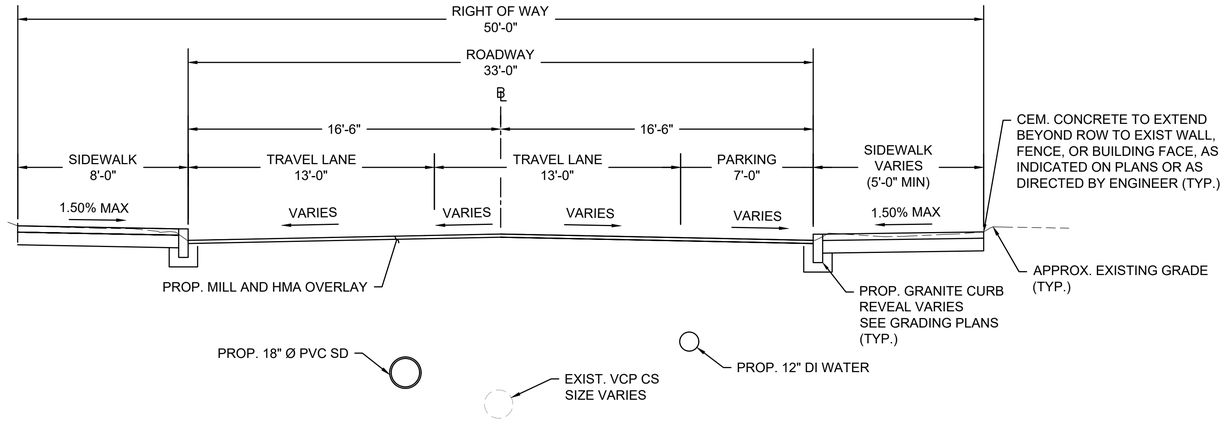

TYPICAL SECTION - BLACKSTONE STREET

SCALE: 1" = 4'
STA 64+00 TO STA 68+50

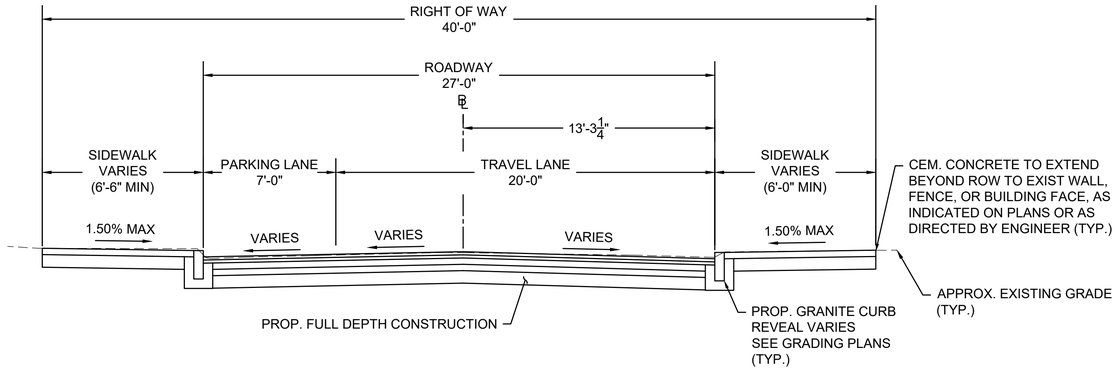

TYPICAL SECTION - GREEN STREET

SCALE: 1" = 4'
STA 135+22 TO STA 137+35

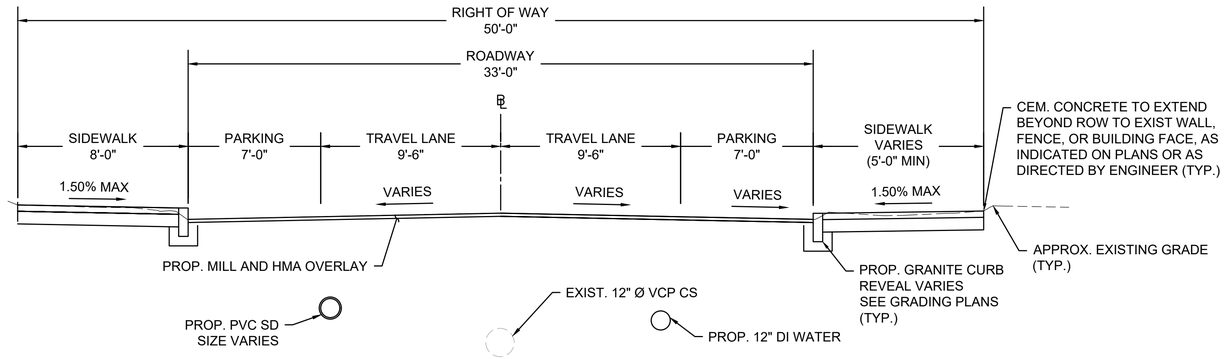

TYPICAL SECTION - BLACKSTONE STREET

SCALE: 1" = 4'
STA 61+50 TO STA 63+00

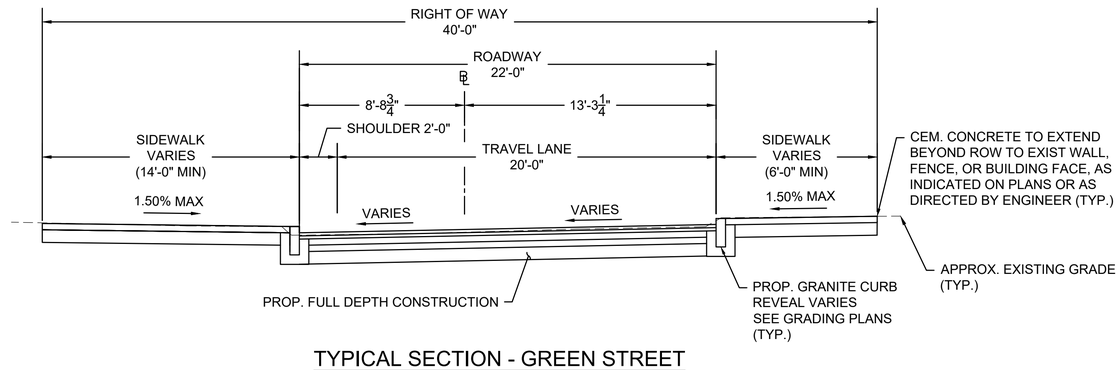

TYPICAL SECTION - GREEN STREET

SCALE: 1" = 4'
STA 133+16 TO STA 135+13

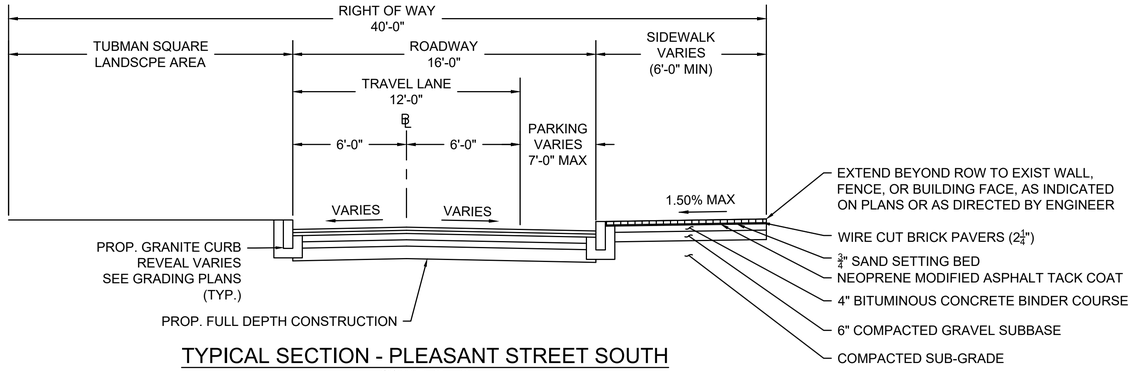

TYPICAL SECTION - PLEASANT STREET SOUTH

SCALE: 1" = 4'
STA 81+17.43 TO STA 82+30.24

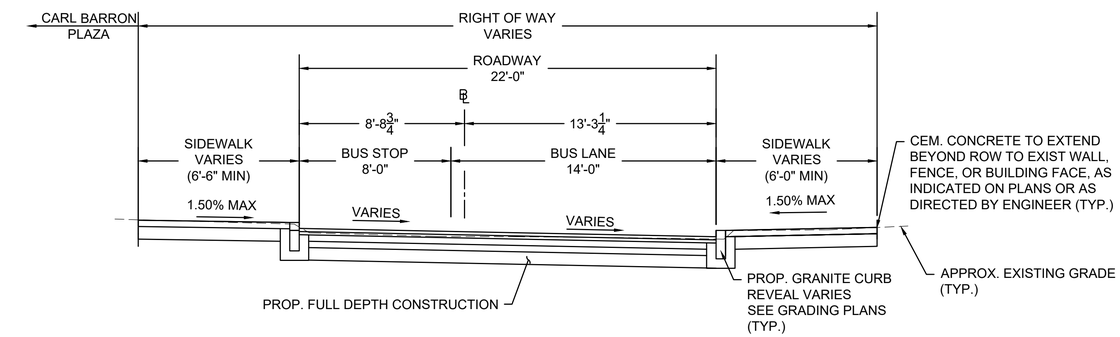

TYPICAL SECTION - GREEN STREET

SCALE: 1" = 4'
STA 132+04 TO STA 132+67

NOTE:

SAND BASED STRUCTURAL SOIL TO BE PLACED AT PROPOSED TREE PIT LOCATIONS PER CITY OF CAMBRIDGE STANDARD AND AS SHOWN ON THE LANDSCAPE PLANTING PLANS.

ISSUED FOR BID

HDR ENGINEERING, INC.
99 HIGH STREET, SUITE 2300
BOSTON, MASSACHUSETTS 02110-2378
(617) 357-7700

COMMONWEALTH OF MASSACHUSETTS
PHILIP FUSCO
CIVIL
No. 45868
REGISTERED PROFESSIONAL ENGINEER

Scale			
Date			
Job No.			
Designed by			
Drawn by			
Checked by	No.	Description	Date
Approved by	REVISIONS		

THE WORKS — CAMBRIDGE DEPARTMENT OF PUBLIC

Client: CITY OF CAMBRIDGE, MA	Sheet: G-2.03
Project: RIVER STREET INFRASTRUCTURE AND STREETSCAPE PROJECT	Total Sheets: 381
Drawing: **TYPICAL SECTIONS - 3**	File No.

File: C:\PWWORKINGIEAST01\D0786396\I7113XXX_(TYPICAL SECTIONS).DWG Plotted: 4/15/2022 2:14:51 PM

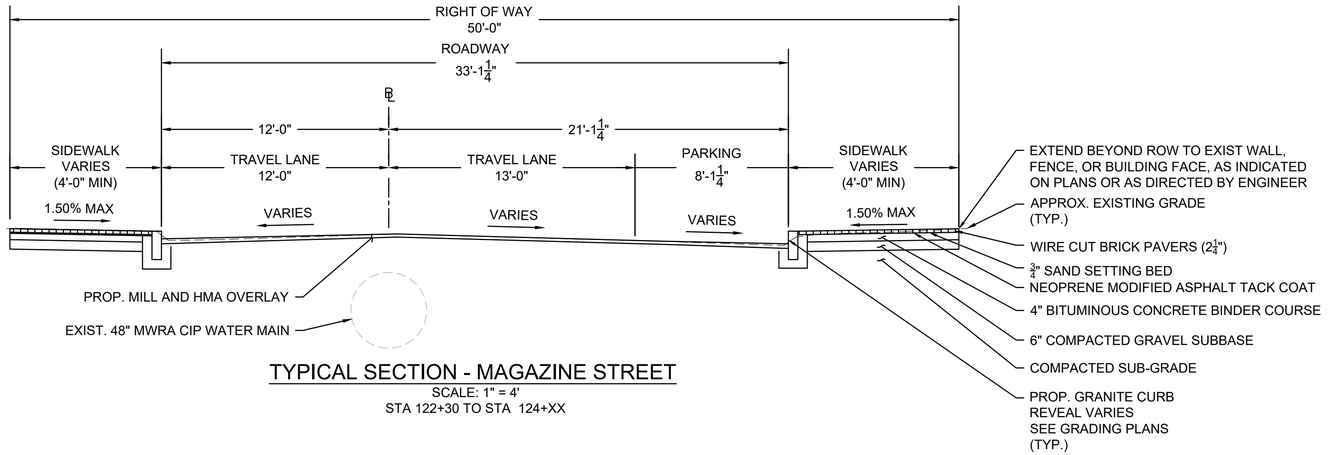

TYPICAL SECTION - MAGAZINE STREET

SCALE: 1" = 4'

STA 122+30 TO STA 124+XX

NOTE:

SAND BASED STRUCTURAL SOIL TO BE PLACED AT PROPOSED TREE PIT LOCATIONS PER CITY OF CAMBRIDGE STANDARD AND AS SHOWN ON THE LANDSCAPE PLANTING PLANS.

ISSUED FOR BID

HDR ENGINEERING, INC.
99 HIGH STREET, SUITE 2300
BOSTON, MASSACHUSETTS 02110-2378
(617) 357-7700

COMMONWEALTH OF MASSACHUSETTS
PHILIP FUSCO
CIVIL
No. 45868
REGISTERED PROFESSIONAL ENGINEER

Scale			
Date			
Job No.			
Designed by			
Drawn by			
Checked by	No.	Description	Date
Approved by	REVISIONS		

CAMBRIDGE DEPARTMENT OF PUBLIC WORKS

Client	CITY OF CAMBRIDGE, MA	Sheet G-2.04
Project	RIVER STREET INFRASTRUCTURE AND STREETSCAPE PROJECT	Total Sheets 381
Drawing	**TYPICAL SECTIONS - 4**	File No.

File: C:\PWWORKING\EAST01\D0786396\7113XXX_(TYPICAL SECTIONS).DWG Plotted: 4/15/2022 2:14:56 PM

BASELINE - BLACKSTONE STREET CONSTRUCTION BASELINE DATA								
NUMBER	STARTING STATION	NORTHING	EASTING	CURVE DATA	LINE DATA	ENDING STATION	NORTHING	EASTING
L14	60+00.00	2957180.723	760400.284		N24°40'11"W 26.30'	60+26.31	2957204.630	760389.303
C10	60+26.31	2957204.630	760389.303	R=67.50' Δ=7°07'38" L=8.40' T=4.20'		60+34.71	2957212.459	760386.281
L15	60+34.71	2957212.459	760386.281		N17°32'32"W 87.97'	61+22.68	2957296.339	760359.766
C11	61+22.68	2957296.339	760359.766	R=250.00' Δ=10°50'06" L=47.28' T=23.71'		61+69.95	2957342.492	760349.851
L16	61+69.95	2957342.492	760349.851		N6°42'26"W 741.68'	69+11.64	2958079.099	760263.224

SEE SHEET G-3.05

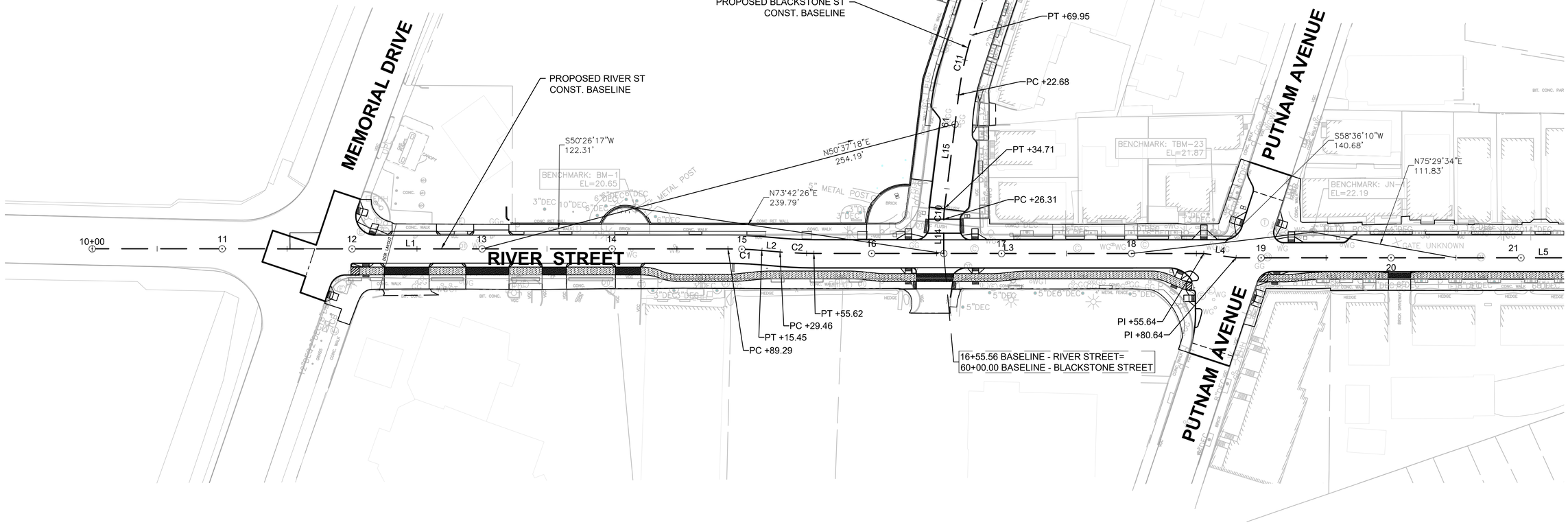

SEE SHEET G-3.02

PLAN

0 40 100 160

SCALE: 1" = 40'

ISSUED FOR BID

HDR ENGINEERING, INC.
99 HIGH STREET, SUITE 2300
BOSTON, MASSACHUSETTS 02110-2378
(617) 357-7700

COMMONWEALTH OF MASSACHUSETTS
PHILIP FUSCO
CIVIL
No. 45868
REGISTERED PROFESSIONAL ENGINEER

Scale			
Date			
Job No.			
Designed by			
Drawn by			
Checked by	No.	Description	Date
Approved by	REVISIONS		

THE WORKS — CAMBRIDGE DEPARTMENT OF PUBLIC

Client	CITY OF CAMBRIDGE, MA	Sheet	G-3.01
Project	RIVER STREET INFRASTRUCTURE AND STREETSCAPE PROJECT	Total Sheets	381
Drawing	**CONSTRUCTION BASELINE PLAN - 1**	File No.	

File: C:\PW\WORKING\EAST01\D0786396\7113XXX_(BASELINE PLANS).DWG Plotted: 4/15/2022 2:17:50 PM

BASELINE - MONTAGUE STREET CONSTRUCTION BASELINE DATA								
NUMBER	STARTING STATION	NORTHING	EASTING	CURVE DATA	LINE DATA	ENDING STATION	NORTHING	EASTING
L17	70+00.00	2957397.368	760879.748		N24°23'32"W 139.99'	71+40.00	2957524.871	760821.930

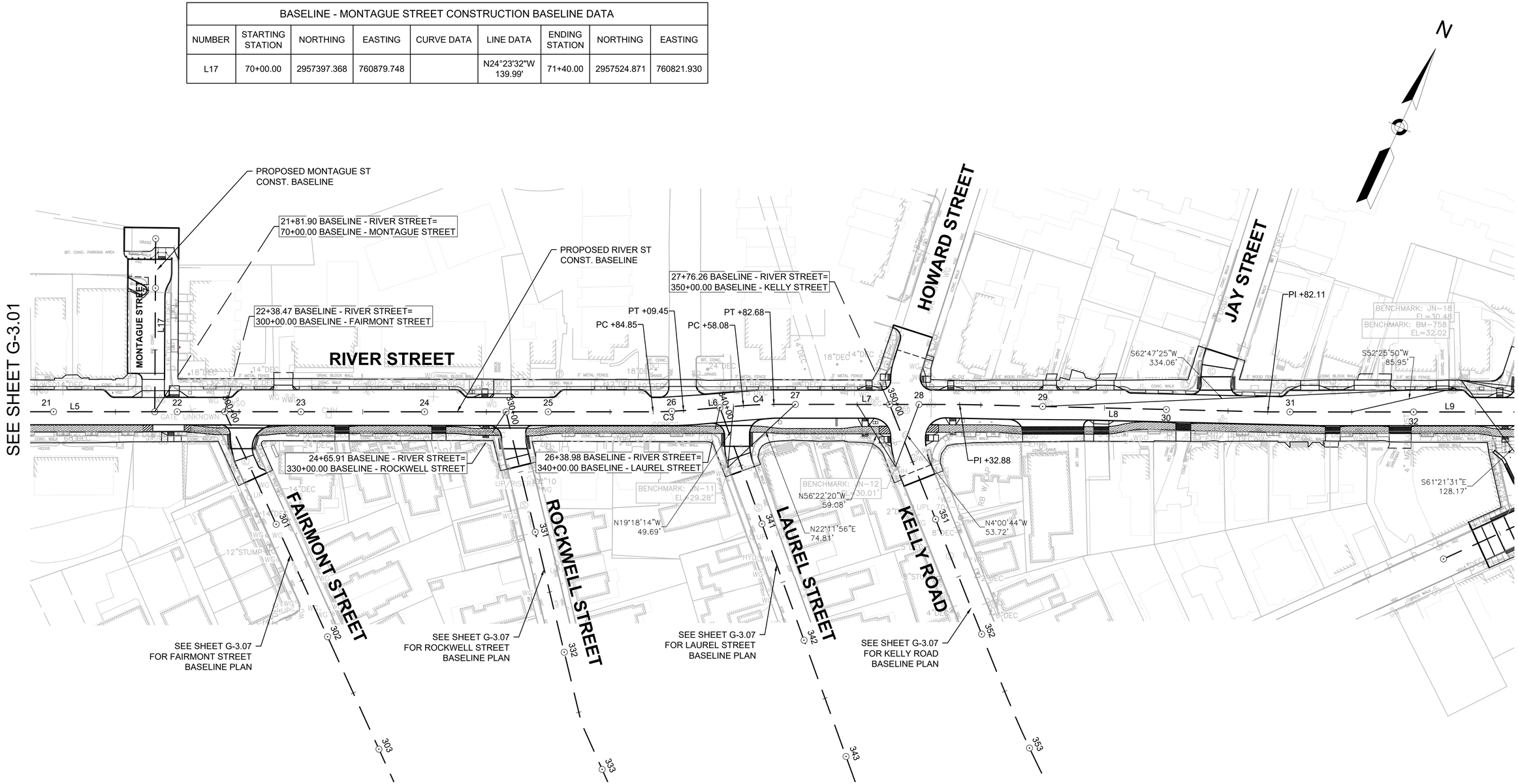

PLAN

0 40 100 160

SCALE: 1" = 40'

ISSUED FOR BID

HDR ENGINEERING, INC.
99 HIGH STREET, SUITE 2300
BOSTON, MASSACHUSETTS 02110-2378
(617) 357-7700

COMMONWEALTH OF MASSACHUSETTS
PHILIP FUSCO
CIVIL
No. 45868
REGISTERED PROFESSIONAL ENGINEER

Scale			
Date			
Job No.			
Designed by			
Drawn by			
Checked by	No.	Description	Date
Approved by	REVISIONS		

THE WORKS — CAMBRIDGE DEPARTMENT OF PUBLIC

Client	CITY OF CAMBRIDGE, MA	Sheet	G-3.02
Project	RIVER STREET INFRASTRUCTURE AND STREETSCAPE PROJECT	Total Sheets	381
Drawing	**CONSTRUCTION BASELINE PLAN - 2**	File No.	

File: C:\PW\WORKING\EAST01\D0786396\7113XXX_(BASELINE PLANS).DWG Plotted: 4/15/2022 2:18:01 PM

BASELINE - PLEASANT STREET SOUTH CONSTRUCTION BASELINE DATA								
NUMBER	STARTING STATION	NORTHING	EASTING	CURVE DATA	LINE DATA	ENDING STATION	NORTHING	EASTING
L18	80+00.00	2957724.272	761876.294		N40°42'34"E 165.40'	81+65.41	2957849.654	761984.176
C12	81+65.41	2957849.654	761984.176	R=56.00' Δ=15°00'00" L=14.66' T=7.37'		81+80.07	2957859.397	761995.075
L19	81+80.07	2957859.397	761995.075		N55°42'34"E 25.47'	82+05.54	2957873.747	762016.120
C13	82+05.54	2957873.747	762016.120	R=44.00' Δ=15°00'00" L=11.52' T=5.79'		82+17.06	2957881.402	762024.684
L20	82+17.06	2957881.402	762024.684		N40°42'34"E 34.92'	82+51.98	2957907.873	762047.460

BASELINE - PLEASANT STREET NORTH CONSTRUCTION BASELINE DATA								
NUMBER	STARTING STATION	NORTHING	EASTING	CURVE DATA	LINE DATA	ENDING STATION	NORTHING	EASTING
L23	100+00.00	2957968.226	762122.616		N24°40'11"W 18.17'	100+18.17	2957984.738	762115.032
C15	100+18.17	2957984.738	762115.032	R=20.00' Δ=65°57'53" L=23.03' T=12.98'		100+41.20	2958006.285	762118.180
L24	100+41.20	2958006.285	762118.180		N41°17'42"E 75.01'	101+16.21	2958062.645	762167.686

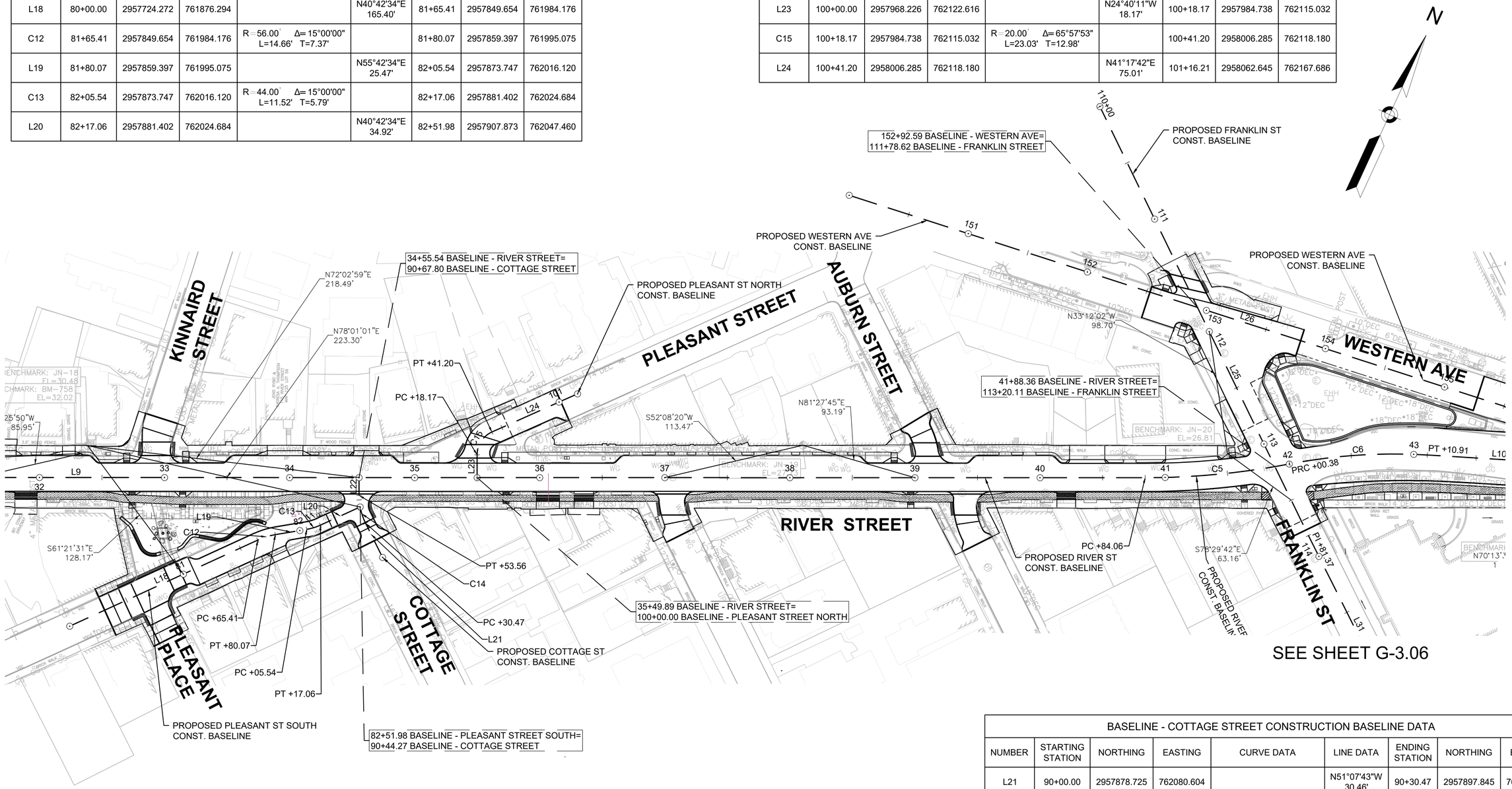

PLAN

0 40 100 160

SCALE: 1" = 40'

BASELINE - COTTAGE STREET CONSTRUCTION BASELINE DATA								
NUMBER	STARTING STATION	NORTHING	EASTING	CURVE DATA	LINE DATA	ENDING STATION	NORTHING	EASTING
L21	90+00.00	2957878.725	762080.604		N51°07'43"W 30.46'	90+30.47	2957897.845	762056.883
C14	90+30.47	2957897.845	762056.883	R=50.00' Δ=26°27'32" L=23.09' T=11.75'		90+53.56	2957915.904	762042.825
L22	90+53.56	2957915.904	762042.825		N24°40'11"W 14.24'	90+67.80	2957928.847	762036.880

ISSUED FOR BID

HDR ENGINEERING, INC.
99 HIGH STREET, SUITE 2300
BOSTON, MASSACHUSETTS 02110-2378
(617) 357-7700

COMMONWEALTH OF MASSACHUSETTS
PHILIP FUSCO
CIVIL
No. 45868
REGISTERED PROFESSIONAL ENGINEER

Scale			
Date			
Job No.			
Designed by			
Drawn by			
Checked by	No.	Description	Date
Approved by	REVISIONS		

THE WORKS — CAMBRIDGE DEPARTMENT OF PUBLIC WORKS

Client: CITY OF CAMBRIDGE, MA	Sheet: G-3.03
Project: RIVER STREET INFRASTRUCTURE AND STREETSCAPE PROJECT	Total Sheets: 381
Drawing: **CONSTRUCTION BASELINE PLAN - 3**	File No.

File: C:\PWWORKING\EAST\01\D0786396\7113XXX_(BASELINE PLANS).DWG Plotted: 4/15/2022 2:18:18 PM

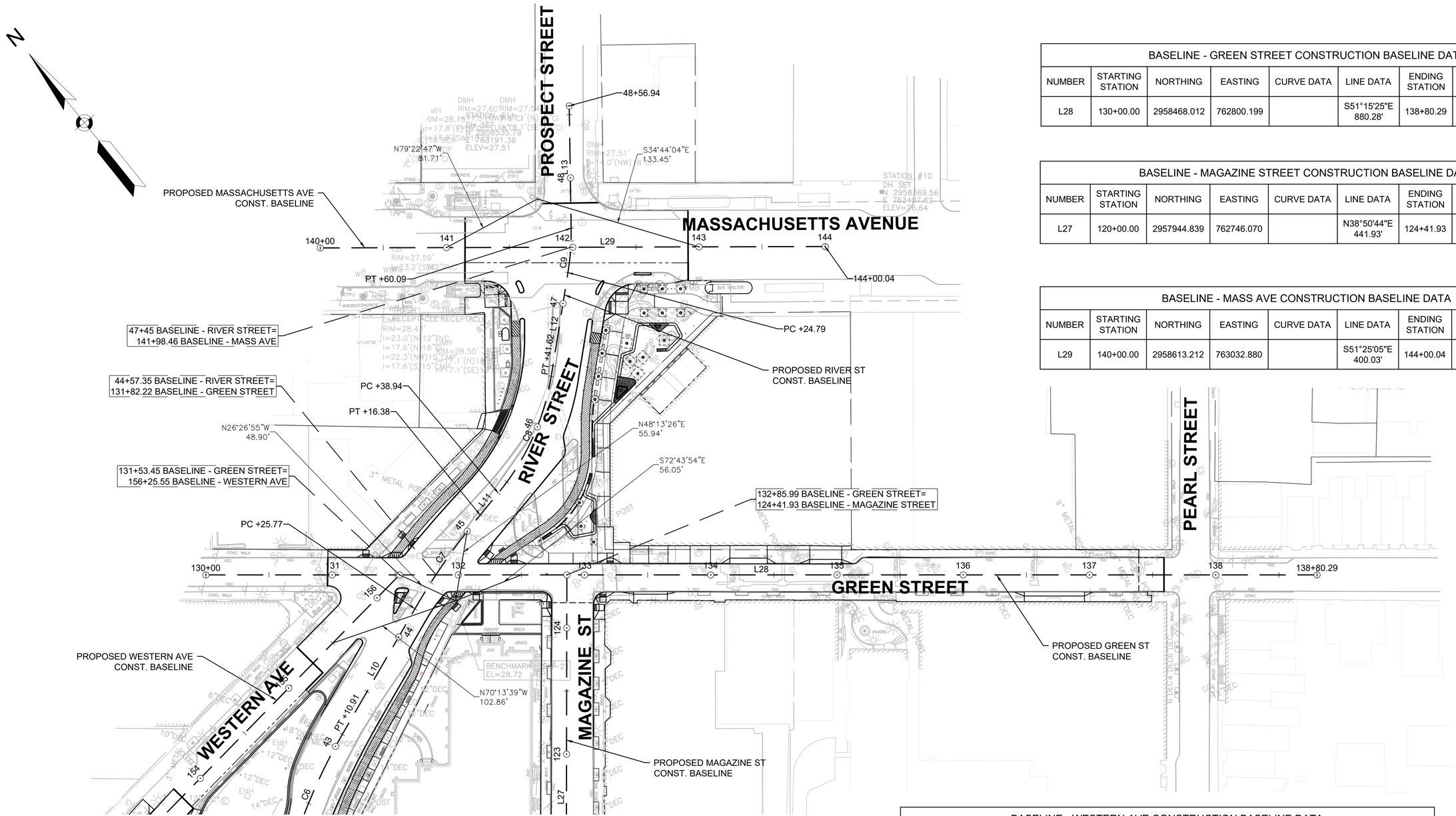

SEE SHEET G-3.03

SEE SHEET G-3.06

BASELINE - GREEN STREET CONSTRUCTION BASELINE DATA								
NUMBER	STARTING STATION	NORTHING	EASTING	CURVE DATA	LINE DATA	ENDING STATION	NORTHING	EASTING
L28	130+00.00	2958468.012	762800.199		S51°15'25"E 880.28'	138+80.29	2957917.103	763486.789

BASELINE - MAGAZINE STREET CONSTRUCTION BASELINE DATA								
NUMBER	STARTING STATION	NORTHING	EASTING	CURVE DATA	LINE DATA	ENDING STATION	NORTHING	EASTING
L27	120+00.00	2957944.839	762746.070		N38°50'44"E 441.93'	124+41.93	2958289.033	763023.259

BASELINE - MASS AVE CONSTRUCTION BASELINE DATA								
NUMBER	STARTING STATION	NORTHING	EASTING	CURVE DATA	LINE DATA	ENDING STATION	NORTHING	EASTING
L29	140+00.00	2958613.212	763032.880		S51°25'05"E 400.03'	144+00.04	2958363.735	763345.597

BASELINE - WESTERN AVE CONSTRUCTION BASELINE DATA								
NUMBER	STARTING STATION	NORTHING	EASTING	CURVE DATA	LINE DATA	ENDING STATION	NORTHING	EASTING
L26	150+00.00	2958297.555	762298.775		N83°10'02"E 625.55'	156+25.55	2958371.978	762919.885

PLAN

0 40 100 160

SCALE: 1" = 40'

ISSUED FOR BID

HDR ENGINEERING, INC.
99 HIGH STREET, SUITE 2300
BOSTON, MASSACHUSETTS 02110-2378
(617) 357-7700

PHILIP FUSCO CIVIL No. 45868 REGISTERED PROFESSIONAL ENGINEER
COMMONWEALTH OF MASSACHUSETTS

Scale			
Date			
Job No.			
Designed by			
Drawn by			
Checked by	No.	Description	Date
Approved by	REVISIONS		

THE WORKS — CAMBRIDGE DEPARTMENT OF PUBLIC WORKS

Client: CITY OF CAMBRIDGE, MA

Project: RIVER STREET INFRASTRUCTURE AND STREETSCAPE PROJECT

Drawing: **CONSTRUCTION BASELINE PLAN - 4**

Sheet: G-3.04

Total Sheets: 381

File No.:

File: C:\PW\WORKING\EAST01\D0786396\7113XXX_(BASELINE PLANS).DWG Plotted: 4/15/2022 2:18:36 PM

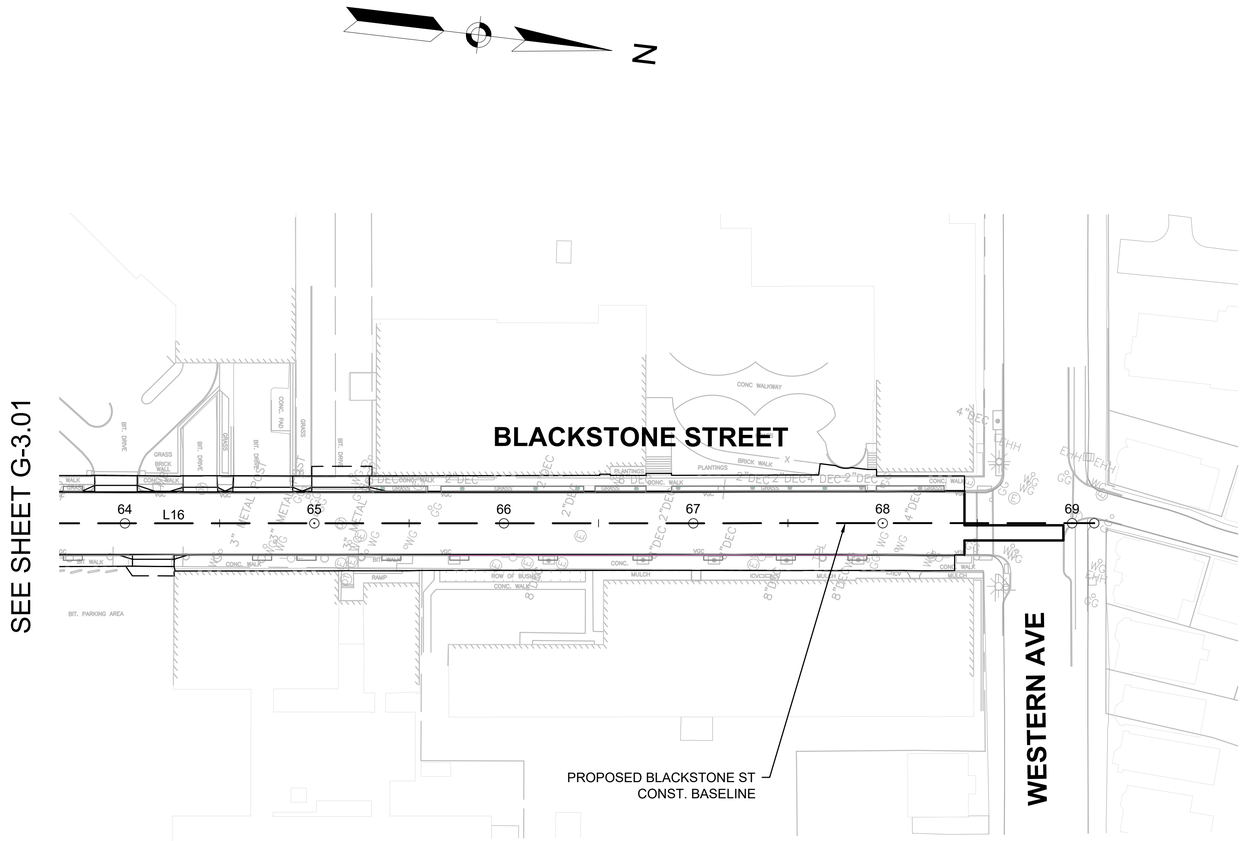

BASELINE - RIVER STREET CONSTRUCTION BASELINE DATA								
NUMBER	STARTING STATION	NORTHING	EASTING	CURVE DATA	LINE DATA	ENDING STATION	NORTHING	EASTING
L1	10+00.00	2956910.333	759803.207		N65°19'49"E 489.28'	14+89.29	2957114.555	760247.839
C1	14+89.29	2957114.555	760247.839	R=300.00' Δ=4°59'48" L=26.16' T=13.09'		15+15.45	2957124.425	760272.059
L2	15+15.45	2957124.425	760272.059		N70°19'37"E 14.00'	15+29.46	2957129.140	760285.248
C2	15+29.46	2957129.140	760285.248	R=300.00' Δ=4°59'48" L=26.16' T=13.09'		15+55.62	2957139.010	760309.468
L3	15+55.62	2957139.010	760309.468		N65°19'49"E 300.01'	18+55.64	2957264.233	760582.101
L4	18+55.64	2957264.233	760582.101		N72°48'00"E 24.99'	18+80.64	2957271.625	760605.983
L5	18+80.64	2957271.625	760605.983		N65°19'49"E 704.21'	25+84.85	2957565.554	761245.922
C3	25+84.85	2957565.554	761245.922	R=300.00' Δ=4°41'55" L=24.60' T=12.31'		26+09.45	2957576.727	761267.833
L6	26+09.45	2957576.727	761267.833		N60°37'54"E 48.63'	26+58.08	2957600.577	761310.214
C4	26+58.08	2957600.577	761310.214	R=300.00' Δ=4°41'55" L=24.60' T=12.31'		26+82.68	2957611.750	761332.125
L7	26+82.68	2957611.750	761332.125		N65°19'49"E 150.20'	28+32.88	2957674.442	761468.616
L8	28+32.88	2957674.442	761468.616		N66°42'35"E 249.22'	30+82.11	2957772.981	761697.530
L9	30+82.11	2957772.981	761697.530		N65°19'49"E 1001.95'	40+84.06	2958191.182	762608.034
C5	40+84.06	2958191.182	762608.034	R=610.50' Δ=10°54'59" L=116.32' T=58.34'		42+00.38	2958249.477	762708.485
C6	42+00.38	2958249.477	762708.485	R=440.00' Δ=14°23'37" L=110.53' T=55.56'		43+10.91	2958301.894	762805.471
L10	43+10.91	2958301.894	762805.471		N68°48'27"E 114.85'	44+25.77	2958343.415	762912.561
C7	44+25.77	2958343.415	762912.561	R=545.00' Δ=9°31'32" L=90.61' T=45.41'		45+16.38	2958369.013	762999.369
L11	45+16.38	2958369.013	762999.369		N78°19'59"E 22.56'	45+38.94	2958373.576	763021.467
C8	45+38.94	2958373.576	763021.467	R=193.50' Δ=30°24'15" L=102.68' T=52.58'		46+41.62	2958419.441	763111.992
L12	46+41.62	2958419.441	763111.992		N47°55'44"E 83.16'	47+24.79	2958475.165	763173.726
C9	47+24.79	2958475.165	763173.726	R=200.00' Δ=10°06'47" L=35.30' T=17.70'		47+60.09	2958501.003	763197.713
L13	47+60.09	2958501.003	763197.713		N37°48'57"E 96.85'	48+56.94	2958577.518	763257.098

PLAN

0 40 100 160

SCALE: 1" = 40'

ISSUED FOR BID

HDR ENGINEERING, INC.
99 HIGH STREET, SUITE 2300
BOSTON, MASSACHUSETTS 02110-2378
(617) 357-7700

COMMONWEALTH OF MASSACHUSETTS
PHILIP FUSCO
CIVIL
No. 45868
REGISTERED PROFESSIONAL ENGINEER

Scale			
Date			
Job No.			
Designed by			
Drawn by			
Checked by	No.	Description	Date
Approved by	REVISIONS		

CAMBRIDGE DEPARTMENT OF PUBLIC THE WORKS

Client	CITY OF CAMBRIDGE, MA	Sheet	G-3.05
Project	RIVER STREET INFRASTRUCTURE AND STREETSCAPE PROJECT	Total Sheets	381
Drawing	**CONSTRUCTION BASELINE PLAN - 5**	File No.	

File: C:\PWWORKINGIEAST01\D0786396\7113XXX_(BASELINE PLANS).DWG Plotted: 4/15/2022 2:18:48 PM

SEE SHEET G-3.04

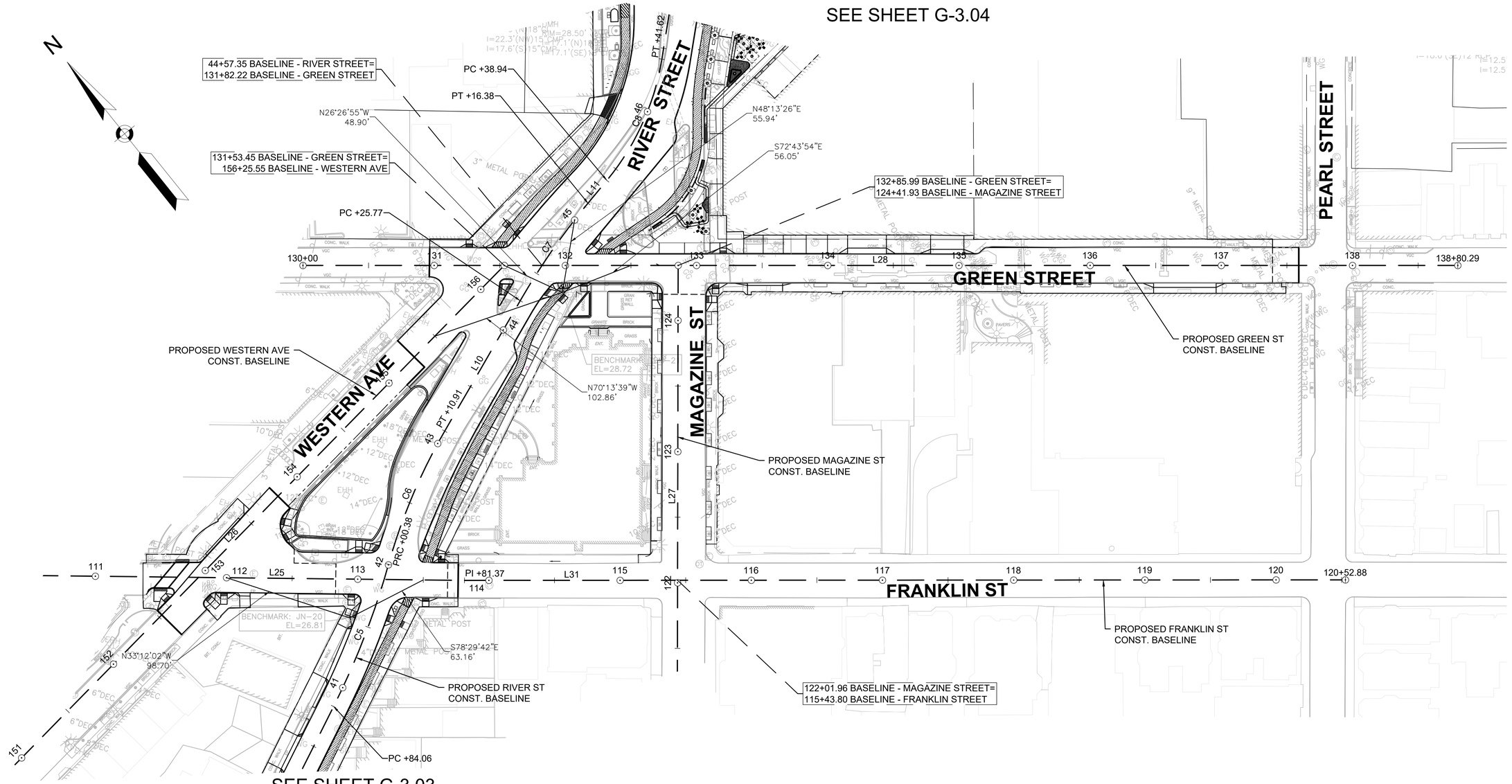

SEE SHEET G-3.03

BASELINE - FRANKLIN STREET CONSTRUCTION BASELINE DATA								
NUMBER	STARTING STATION	NORTHING	EASTING	CURVE DATA	LINE DATA	ENDING STATION	NORTHING	EASTING
L25	110+00.00	2958445.709	762451.234		S50°36'49"E 381.37'	113+81.37	2958203.710	762745.991
L31	113+81.37	2958203.710	762745.991		S51°17'27"E 671.51'	120+52.88	2957783.769	763269.992

PLAN

0 40 100 160

SCALE: 1" = 40'

ISSUED FOR BID

HDR ENGINEERING, INC.
99 HIGH STREET, SUITE 2300
BOSTON, MASSACHUSETTS 02110-2378
(617) 357-7700

COMMONWEALTH OF MASSACHUSETTS
PHILIP FUSCO
CIVIL
No. 45868
REGISTERED PROFESSIONAL ENGINEER

Scale			
Date			
Job No.			
Designed by			
Drawn by			
Checked by	No.	Description	Date
Approved by	REVISIONS		

CAMBRIDGE DEPARTMENT OF PUBLIC WORKS

Client	CITY OF CAMBRIDGE, MA	Sheet	G-3.06
Project	RIVER STREET INFRASTRUCTURE AND STREETSCAPE PROJECT	Total Sheets	381
Drawing	**CONSTRUCTION BASELINE PLAN - 6**	File No.	

File: C:\PWWORKING\EAST01\D0786396\7113XXX_(BASELINE PLANS).DWG Plotted: 4/15/2022 2:19:00 PM

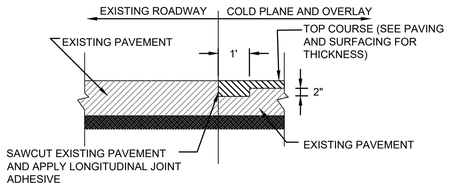

NOTES:
1. CLEAN ALL COLD PLANED SURFACES BEFORE APPLYING JOINT ADHESIVE AND FINAL PAVEMENT

MATCH EXISTING PAVEMENT - OVERLAY
NTS

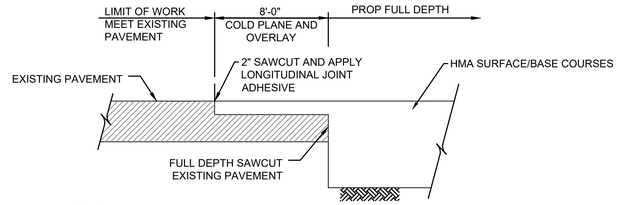

NOTES:

1. CLEAN ALL COLD PLANED SURFACES BEFORE APPLYING JOINT ADHESIVE, TACK COAT AND FINAL PAVEMENT.
2. APPLY TACK COAT TO COLD PLANED SURFACES PRIOR TO BEING OVERLAID AT THE RATE OF 0.10 GALLONS PER SQUARE YARD. TEMPORARY PAVEMENT SHALL BE PLACED ALONG ANY LIP CREATED BY PAVEMENT REMOVAL. TEMPORARY PAVEMENT SHALL BE PLACED AT A SLOPE OF LESS THAN 1V:3H.

PAVEMENT TRANSITION - FULL DEPTH
NTS

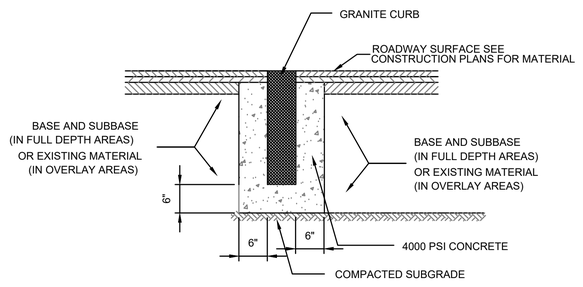

FLUSH GRANITE CURB INSTALLATION
NTS

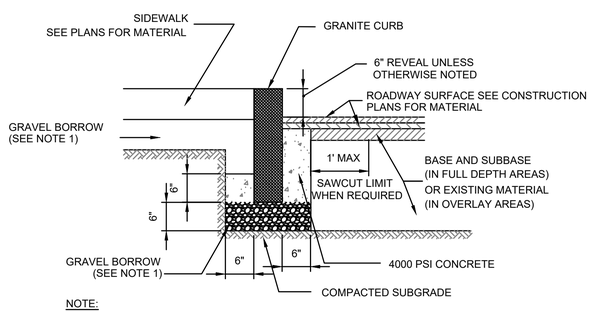

NOTE:

1. EXISTING MATERIAL SHALL BE USED IF DEEMED SUITABLE BY THE ENGINEER.

GRANITE CURB INSTALLATION
NTS

File: C:\PW\WORKING\EAST01\D0786396\7113XXX_(ROADWAY DETAILS).DWG Plotted: 4/15/2022 2:21:53 PM

ISSUED FOR BID

HDR ENGINEERING, INC.
99 HIGH STREET, SUITE 2300
BOSTON, MASSACHUSETTS 02110-2378
(617) 357-7700

COMMONWEALTH OF MASSACHUSETTS
PHILIP FUSCO
CIVIL
No. 45868
REGISTERED PROFESSIONAL ENGINEER

Scale			
Date			
Job No.			
Designed by			
Drawn by			
Checked by	No.	Description	Date
Approved by	REVISIONS		

THE WORKS — CAMBRIDGE DEPARTMENT OF PUBLIC WORKS

Client	CITY OF CAMBRIDGE, MA	Sheet	RD-1.01
Project	RIVER STREET INFRASTRUCTURE AND STREETSCAPE PROJECT	Total Sheets	381
Drawing	**ROADWAY CONSTRUCTION DETAILS - 1**	File No.	

NOTES:

1. SEE SPECIFICATIONS FOR ADDITIONAL RAISED INTERSECTION CONSTRUCTION REQUIREMENTS

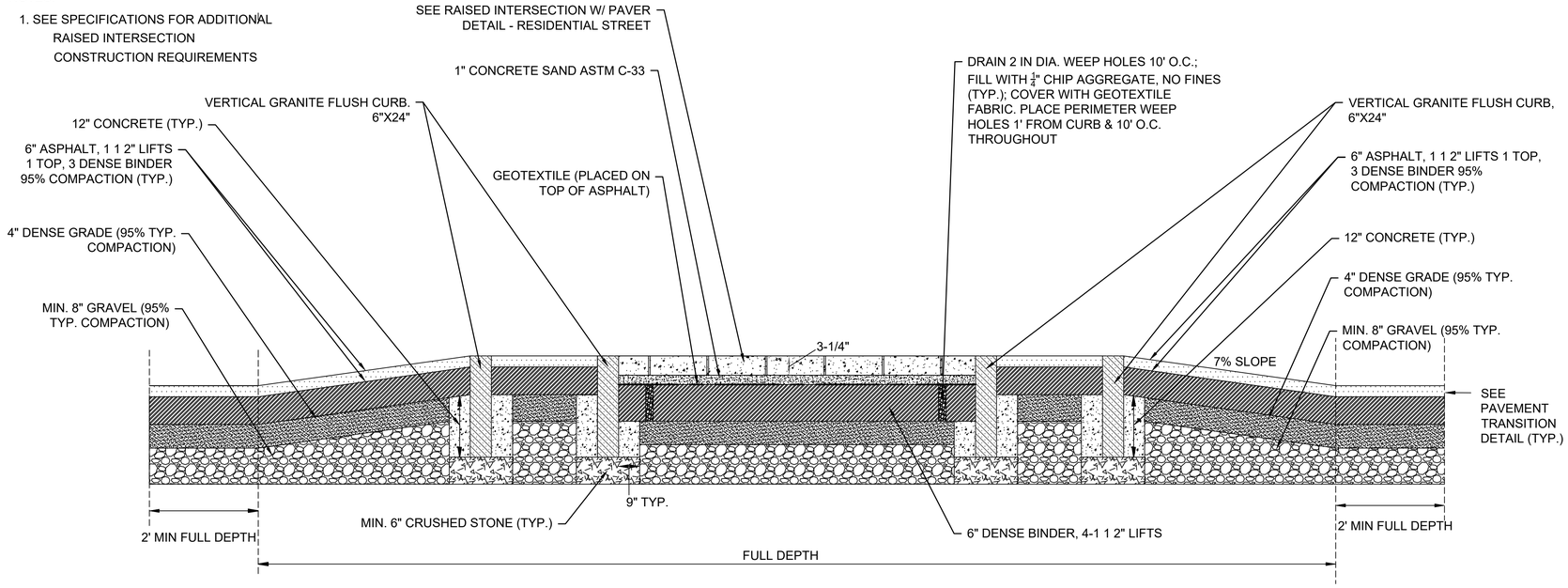

RAISED INTERSECTION PROFILE - PAVERS W/ ASPHALT BASE - RESIDENTIAL STREET

N.T.S.

NOTES;

1. WEEP HOLES TO BE CONSTRUCTED WITH 2" PVC SLEEVE OR EQUIVALENT. CONTRACTOR TO PREVENT CEMENT CONCRETE FROM COVERING THE WEEP HOLES.
2. PROTECT PAVER SURFACE WITH URETHANE SCUFF PAD DURING COMPACTION.

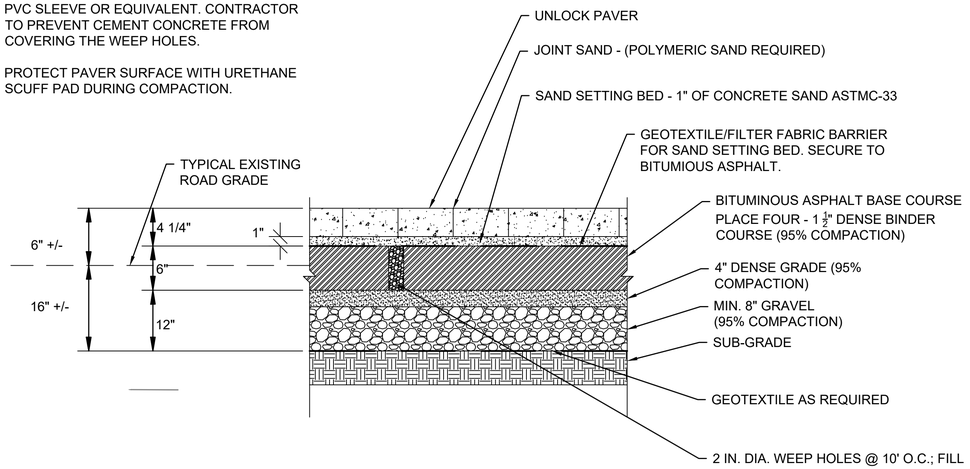

RAISED INTERSECTION W/ PAVERS-RESIDENTIAL STREET

N.T.S.

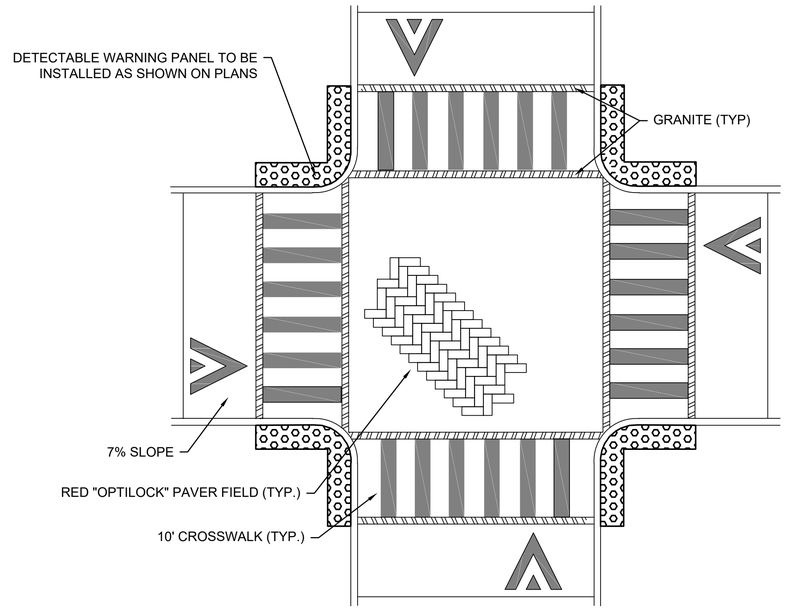

SEE: RAISED INTERSECTION PROFILE AND RAISED INTERSECTION W/ PAVERS DETAIL

4-WAY RAISED INTERSECTION PLAN

N.T.S.

ISSUED FOR BID

HDR ENGINEERING, INC.
99 HIGH STREET, SUITE 2300
BOSTON, MASSACHUSETTS 02110–2378
(617) 357–7700

COMMONWEALTH OF MASSACHUSETTS
PHILIP FUSCO
CIVIL
No. 45868
REGISTERED PROFESSIONAL ENGINEER

Scale			
Date			
Job No.			
Designed by			
Drawn by			
Checked by	No.	Description	Date
Approved by	REVISIONS		

THE WORKS — CAMBRIDGE DEPARTMENT OF PUBLIC WORKS

Client: CITY OF CAMBRIDGE, MA	Sheet: RD-1.02
Project: RIVER STREET INFRASTRUCTURE AND STREETSCAPE PROJECT	Total Sheets: 381
Drawing: **ROADWAY CONSTRUCTION DETAILS - 2**	File No.

File: C:\PWWORKING\EAST01\D0786396\I7113XXX_(ROADWAY DETAILS).DWG Plotted: 4/15/2022 2:22:00 PM

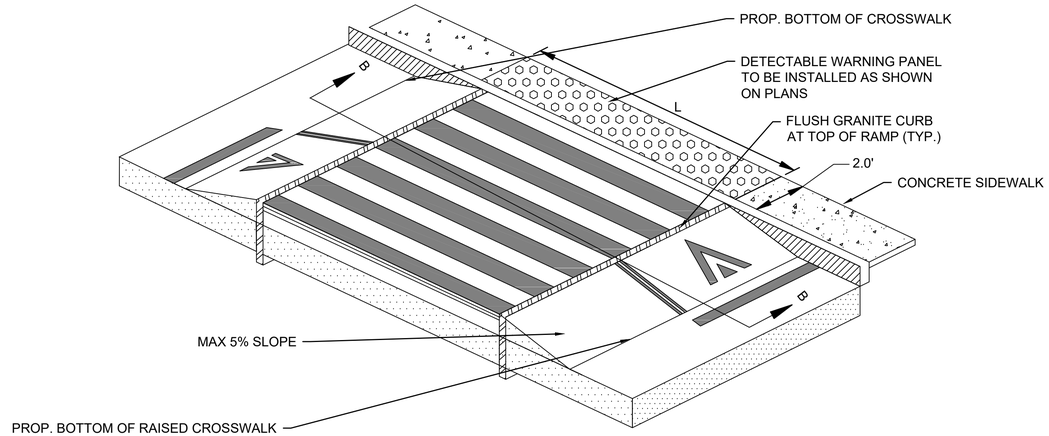

RAISED CROSSWALK ISOMETRIC PLAN
N.T.S.

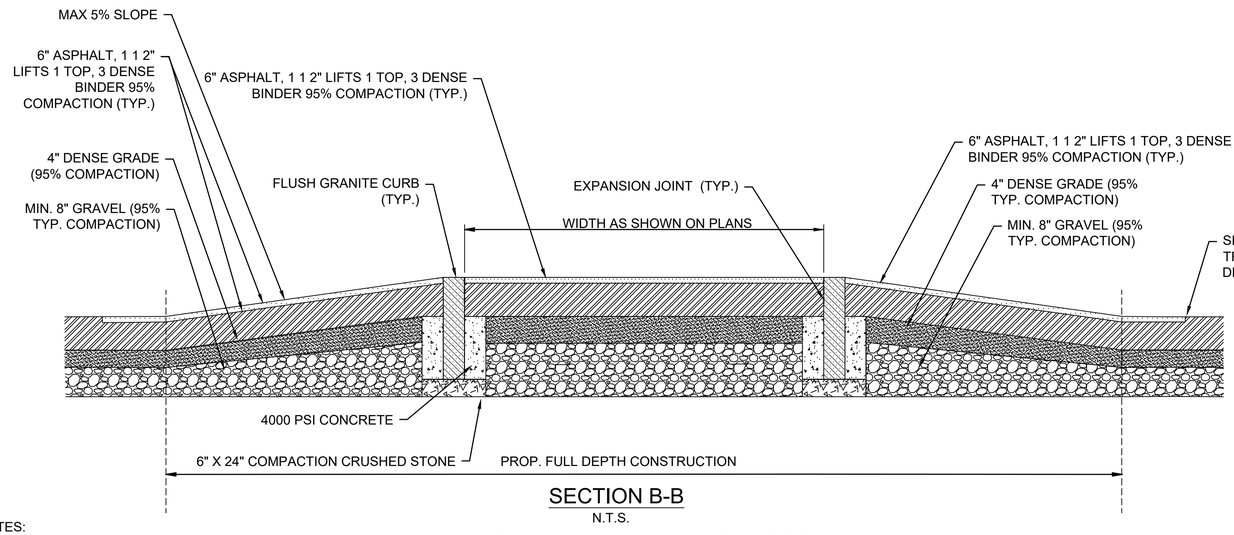

SECTION B-B
N.T.S.

RAISED CROSSWALK - SIDE STREETS
N.T.S.

NOTES:
1. SEE SPECIFICATIONS FOR ADDITIONAL RAISED CROSSWALK CONSTRUCTION REQUIREMENTS

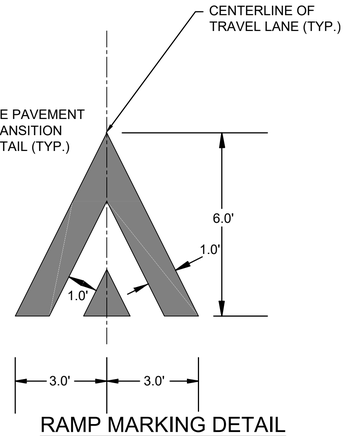

RAMP MARKING DETAIL
N.T.S.

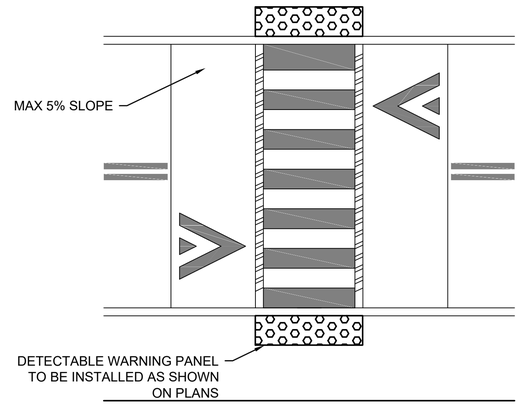

RAISED CROSSWALK PLAN VIEW
N.T.S.

ISSUED FOR BID

HDR ENGINEERING, INC.
99 HIGH STREET, SUITE 2300
BOSTON, MASSACHUSETTS 02110–2378
(617) 357–7700

COMMONWEALTH OF MASSACHUSETTS
PHILIP FUSCO
CIVIL
No. 45868
REGISTERED PROFESSIONAL ENGINEER

Scale			
Date			
Job No.			
Designed by			
Drawn by			
Checked by	No.	Description	Date
Approved by	REVISIONS		

THE WORKS — CAMBRIDGE DEPARTMENT OF PUBLIC WORKS

Client	CITY OF CAMBRIDGE, MA	Sheet	RD-1.03
Project	RIVER STREET INFRASTRUCTURE AND STREETSCAPE PROJECT	Total Sheets	381
Drawing	**ROADWAY CONSTRUCTION DETAILS - 3**	File No.	

File: C:\PW\WORKING\EAST01\D0786396\7113XXX_(ROADWAY DETAILS).DWG Plotted: 4/15/2022 2:22:05 PM

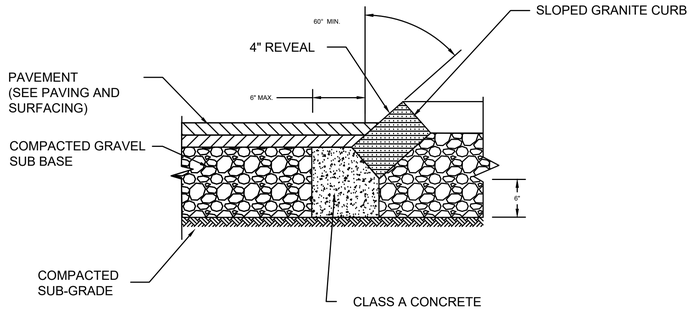

NOTES:

1. PLACE AND COMPACT GRAVEL PRIOR TO SETTING SLOPED GRANITE CURB

SLOPED GRANITE CURB DETAIL

NTS

File: C:\PW\WORKING\EAST01\D0786396\7113XXX_(ROADWAY DETAILS).DWG Plotted: 4/15/2022 2:22:09 PM

ISSUED FOR BID

HDR ENGINEERING, INC.
99 HIGH STREET, SUITE 2300
BOSTON, MASSACHUSETTS 02110-2378
(617) 357-7700

COMMONWEALTH OF MASSACHUSETTS
PHILIP FUSCO
CIVIL
No. 45868
REGISTERED PROFESSIONAL ENGINEER

Scale			
Date			
Job No.			
Designed by			
Drawn by			
Checked by	No.	Description	Date
Approved by	REVISIONS		

CAMBRIDGE DEPARTMENT OF PUBLIC WORKS

Client	CITY OF CAMBRIDGE, MA	Sheet RD-1.04
Project	RIVER STREET INFRASTRUCTURE AND STREETSCAPE PROJECT	Total Sheets 381
Drawing	**ROADWAY CONSTRUCTION DETAILS - 4**	File No.

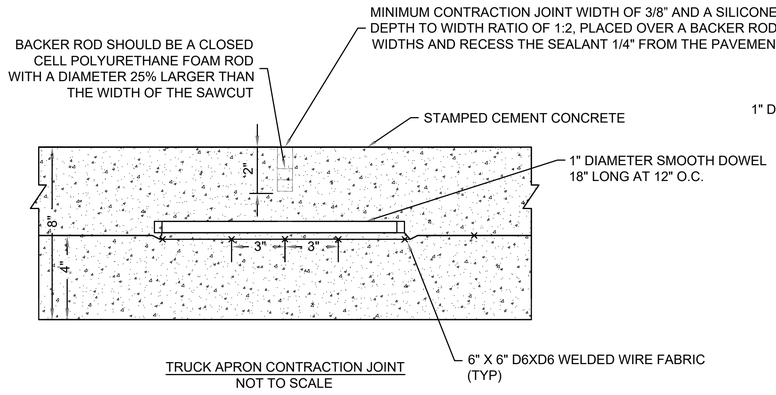

TRUCK APRON CONTRACTION JOINT
NOT TO SCALE

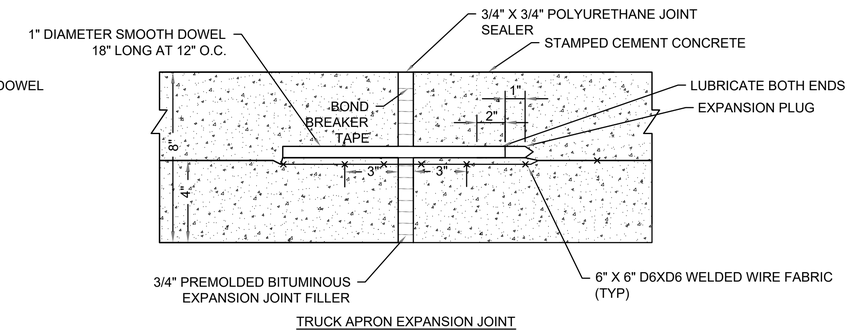

TRUCK APRON EXPANSION JOINT
NOT TO SCALE

TRUCK APRON NOTES:

1. THE SAWCUT DEPTH SHOULD BE 2" PER THE FHWA TECHNICAL ADVISORY.
2. JOINT SEALER IS REQUIRED OVER PREFORMED JOINT FILLER BETWEEN THE TRUCK APRON AND THE T-100 CURB FOR CONSISTENCY / UNIFORM APPEARANCE.

DOWEL NOTES:

1. DOWELS SHALL BE PLAIN STEEL BARS CONFORMING TO ASTM A 615, GRADE 50.
2. DOWELS IN EXPANSION JOINTS SHALL BE WIPED CLEAN AND COATED WITH A THIN FILM OF LUBRICATION OIL OR GREASE BEFORE CONCRETE IS PLACED.

JOINT NOTES:

1. EXPANSION JOINTS SHALL COINCIDE WITH THE COBBLESTONE PATTERN.
2. NO ADDITIONAL CONSTRUCTION JOINTS SHALL BE PERMITTED. ALL CONSTRUCTION JOINTS SHALL BE LOCATED AT EXPANSION JOINTS.
3. POLYURETHANE JOINT SEALER SHALL CLOSELY MATCH THE CONCRETE COLOR.
4. TWELVE (12) CONSTRUCTION JOINTS AND FOUR (4) EXPANSION JOINTS SHALL BE SPACED EVENLY AROUND THE APRON.
5. PREFORMED JOINT FILLER TO BE INSTALLED AROUND CASTINGS WITHIN TRUCK APRON. ENSURE THAT A JOINT PASSES

CEMENT CONCRETE TRUCK APRON
NOT TO SCALE

ISSUED FOR BID

HDR ENGINEERING, INC.
99 HIGH STREET, SUITE 2300
BOSTON, MASSACHUSETTS 02110-2378
(617) 357-7700

COMMONWEALTH OF MASSACHUSETTS
PHILIP FUSCO CIVIL No. 45868
REGISTERED PROFESSIONAL ENGINEER

Scale			
Date			
Job No.			
Designed by			
Drawn by			
Checked by	No.	Description	Date
Approved by	REVISIONS		

THE WORKS — CAMBRIDGE DEPARTMENT OF PUBLIC

Client	CITY OF CAMBRIDGE, MA	Sheet	RD-1.05
Project	RIVER STREET INFRASTRUCTURE AND STREETSCAPE PROJECT	Total Sheets	381
Drawing	**ROADWAY CONSTRUCTION DETAILS - 5**	File No.	

File: C:\PW\WORKING\EAST01\D0786396\I7113XXX_(ROADWAY DETAILS).DWG Plotted: 4/15/2022 2:22:15 PM

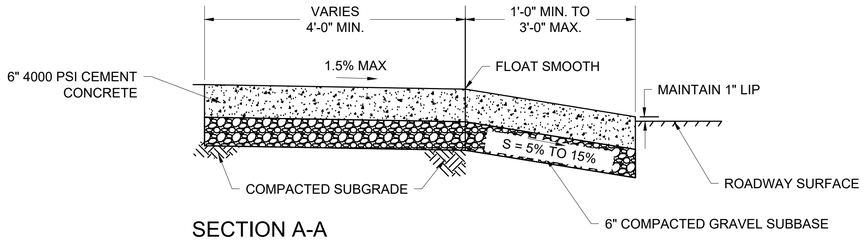

SECTION A-A

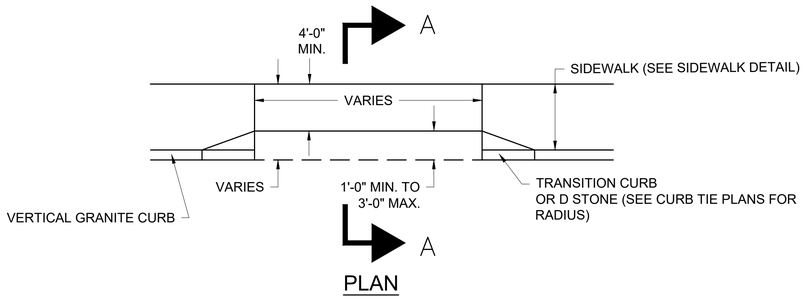

PLAN

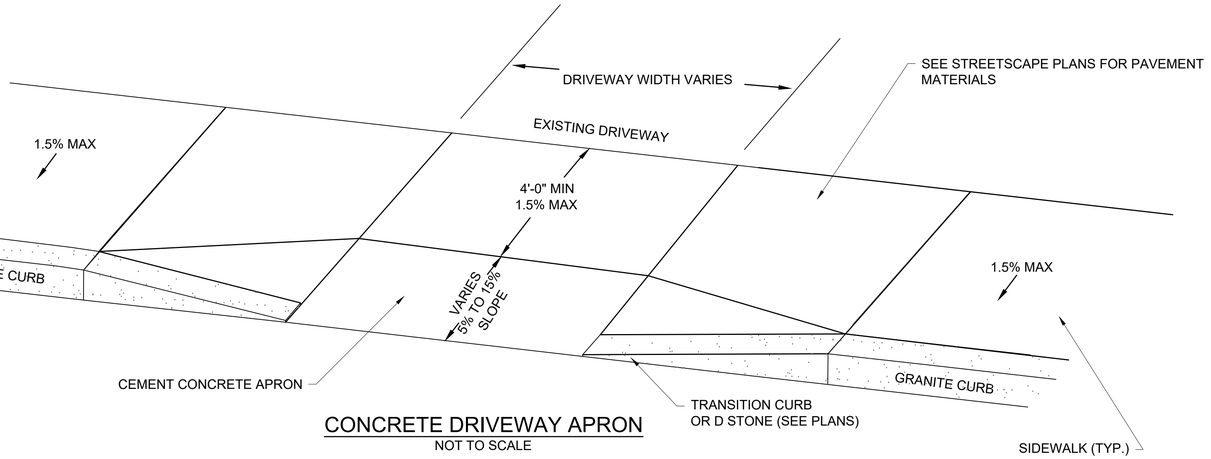

CONCRETE DRIVEWAY APRON

NOT TO SCALE

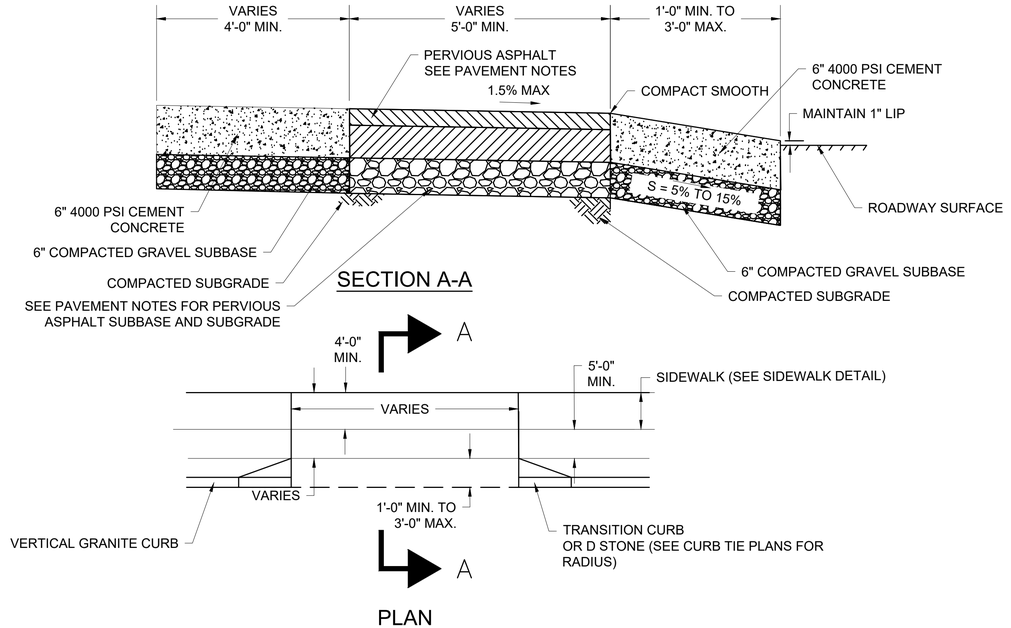

SECTION A-A

PLAN

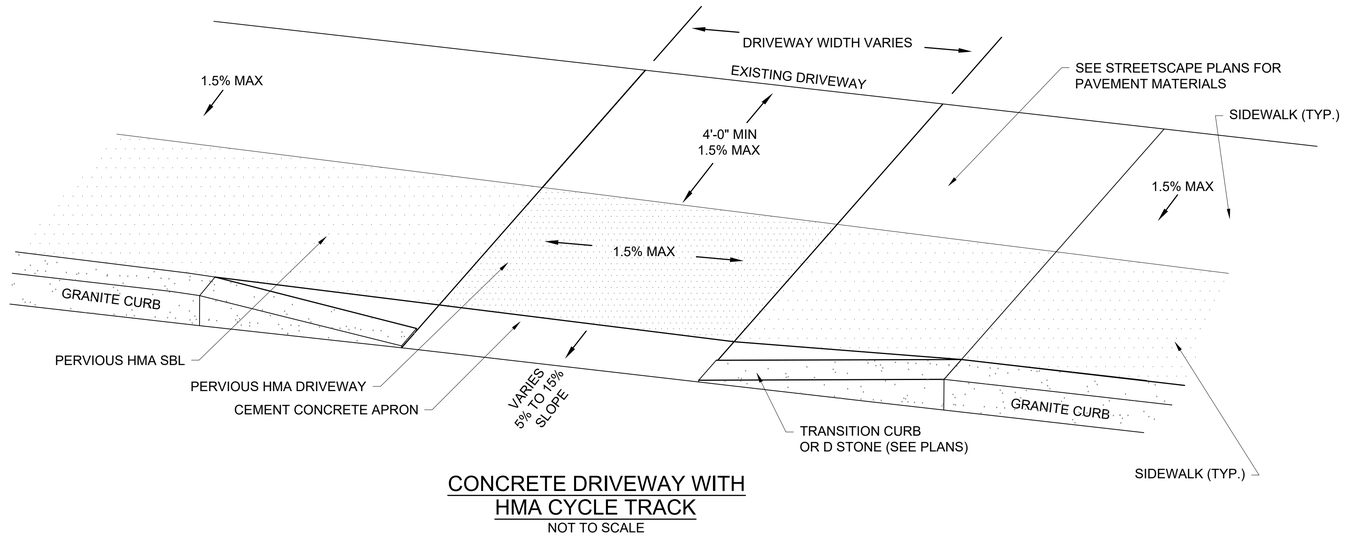

CONCRETE DRIVEWAY WITH
HMA CYCLE TRACK

NOT TO SCALE

NOTES:

SEE DRIVEWAY TABLE AND CURB TIE AND ALIGNMENT PLANS FOR D STONE RADIUS AND DIMENSIONS WHERE APPLICABLE

ISSUED FOR BID

HDR ENGINEERING, INC.
99 HIGH STREET, SUITE 2300
BOSTON, MASSACHUSETTS 02110–2378
(617) 357–7700

COMMONWEALTH OF MASSACHUSETTS
PHILIP FUSCO
CIVIL
No. 45868
REGISTERED PROFESSIONAL ENGINEER

Scale			
Date			
Job No.			
Designed by			
Drawn by			
Checked by	No.	Description	Date
Approved by	REVISIONS		

THE WORKS — CAMBRIDGE DEPARTMENT OF PUBLIC

Client	CITY OF CAMBRIDGE, MA	Sheet	RD-1.06
Project	RIVER STREET INFRASTRUCTURE AND STREETSCAPE PROJECT	Total Sheets	381
Drawing	**DRIVEWAY AND RAMP DETAILS - 1**	File No.	

File: C:\PWWORKINGIEAST01\D0786396\7113XXX_(ROADWAY DETAILS).DWG Plotted: 4/15/2022 2:22:19 PM

DRIVEWAY DATA

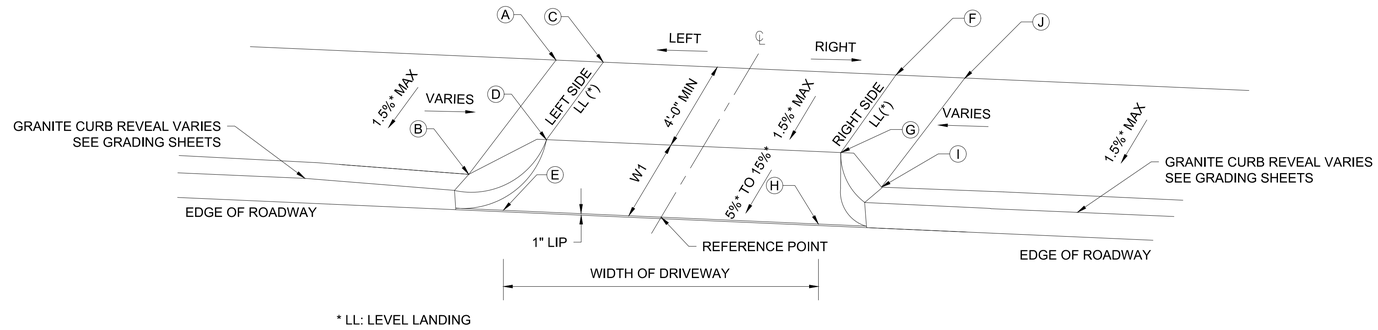

* LL: LEVEL LANDING

TYPE 1: D-STONE DRIVEWAY
NOT TO SCALE

NOTE:

GRADES E AND H CORRESPOND TO TOP OF CONCRETE
1" ABOVE PROPOSED ROADWAY SURFACE

	DRIVE REFERENCE POINT			LENGTH OF PRIMARY RAMP (W1)			DEPTH OF LEVEL LANDING (LL)			WIDTH OF DRIVEWAY	ROADWAY GUTTER SLOPE	TRANSITION LENGTH			ELEVATION								
DRIVE #	STATION	OFFSET		(LEFT	-	RIGHT)	(LEFT	-	RIGHT)			(LEFT	-	RIGHT)	A	B	C	D	E	F	G	H	I	J
1	12+47.89	10.50	L	3.00	-	3.00	6.66	-	5.50	34.16	0.41%	3.00	-	3.00	N/A	18.86	18.93	18.84	18.40	18.74	18.66	18.26	18.72	N/A
2	12+42.09	11.00	R	4.00	-	4.00	15.91	-	15.99	34.44	0.99%	3.00	-	3.00	N/A	18.72	19.04	18.81	18.47	19.54	19.31	18.81	18.98	N/A
3	13+07.15	10.50	L	4.25	-	4.25	4.19	-	4.09	27.03	0.55%	3.00	-	3.00	N/A	18.61	18.73	18.68	18.15	18.99	18.93	18.30	18.82	N/A
4	13+04.20	11.00	R	3.00	-	3.00	17.03	-	16.96	33.30	0.06%	3.00	-	3.00	N/A	18.66	18.65	18.41	18.40	18.67	18.45	18.42	18.62	N/A
5	13+55.60	11.00	R	3.00	-	3.00	17.02	-	17.17	18.57	0.22%	3.00	-	3.00	N/A	18.80	18.68	18.55	18.43	18.73	18.48	18.39	18.64	N/A
6	14+12.46	11.00	R	3.00	-	3.00	16.80	-	16.58	19.57	0.77%	3.00	-	3.00	N/A	18.94	18.93	18.68	18.60	18.81	18.57	18.45	18.70	N/A
6.1	16+48.87	11.00	R	4.50		4.50	11.83		11.63	28.96	0.24%	9.40		3.00		20.50	20.36	20.19	20.16	20.29	20.12	20.09	20.59	N/A
9	22+85.85	17.50	L	4.00	-	4.00	5.19	-	5.29	15.26	0.98%	3.00	-	3.00	N/A	19.66	19.98	19.91	19.81	20.01	19.98	19.96	20.22	N/A
12	24+62.90	11.50	L	3.00	-	3.00	11.78	-	11.57	14.00	3.14%	3.00	-	3.00	N/A	23.40	23.46	23.29	23.15	23.76	23.59	23.59	23.84	N/A
12.1	26+10.14	11.78	L	8.50	-	7.00	5.50	-	5.50	23.55	1.95%	8.60	-	8.10	N/A	26.09	26.17	26.09	25.92	26.63	26.55	26.38	26.72	N/A
13	29+05.49	13.25	L	4.00	-	4.00	4.14	-	4.10	11.01	0.73%	3.00	-	3.00	N/A	29.45	29.43	29.37	28.78	29.52	29.46	28.86	29.38	N/A
14.1	29+08.20	10.46	R	5.50	-	5.90	11.68	-	12.53	50.29	0.93%	5.10	-	10.10	N/A	29.13	29.77	29.60	28.88	26.44	29.18	28.41	29.63	N/A
22.1	81+79.88	11.52	R	4.00	-	4.00	5.04	-	5.86	13.20	2.27%	0.70	-	3.00	N/A	28.97	29.11	29.04	28.77	29.14	29.07	28.47	29.19	N/A
23	34+61.49	17.50	L	4.00	-	4.00	4.02	-	4.12	20.15	0.69%	3.00	-	3.00	N/A	28.62	28.74	28.68	28.12	28.59	28.53	27.98	28.57	N/A
24	35+55.47	44.56	L	3.21	-	3.00	7.81	-	4.03	24.32	0.21%	3.00	-	3.00	N/A	27.99	28.03	27.92	27.71	27.98	27.92	27.66	27.91	N/A
28	40+37.71	11.50	L	3.00	-	3.00	11.30	-	11.28	28.19	0.35%	3.00	-	3.00	N/A	26.59	26.72	26.56	26.16	26.60	26.44	26.26	26.50	N/A

NOTES:
1. SEE CONSTRUCTION PLANS AND CURB TIE PLANS FOR LOCATION OF DRIVEWAYS.
2. FINAL DRIVEWAY ELEVATIONS SHALL GRADE TO DRAIN AND LAYOUT SHALL BE APPROVED BY ENGINEER PRIOR TO PLACEMENT.
3. ALL DRIVEWAY GRADES SHALL CONFORM TO THE LATEST EDITION OF MASSDOT CONSTRUCTION STANDARD.
4. * = TOLERANCE FOR CONSTRUCTION ± 0.5%

11:08:26 AM
File: C:\PWWORKINGIEAST01\D0786396\7113XXX_(ROADWAY DETAILS).DWG Plotted: 4/25/2022

ISSUED FOR BID

HDR ENGINEERING, INC.
99 HIGH STREET, SUITE 2300
BOSTON, MASSACHUSETTS 02110–2378
(617) 357–7700

COMMONWEALTH OF MASSACHUSETTS
PHILIP FUSCO
CIVIL
No. 45868
REGISTERED PROFESSIONAL ENGINEER

Scale			
Date			
Job No.			
Designed by			
Drawn by			
Checked by	No.	Description	Date
Approved by	REVISIONS		

THE WORKS — CAMBRIDGE DEPARTMENT OF PUBLIC

Client	CITY OF CAMBRIDGE, MA
Project	RIVER STREET INFRASTRUCTURE AND STREETSCAPE PROJECT
Drawing	**DRIVEWAY AND RAMP DETAILS - 2**
Sheet	RD-1.07
Total Sheets	381
File No.	

DRIVEWAY DATA (CONT'D)

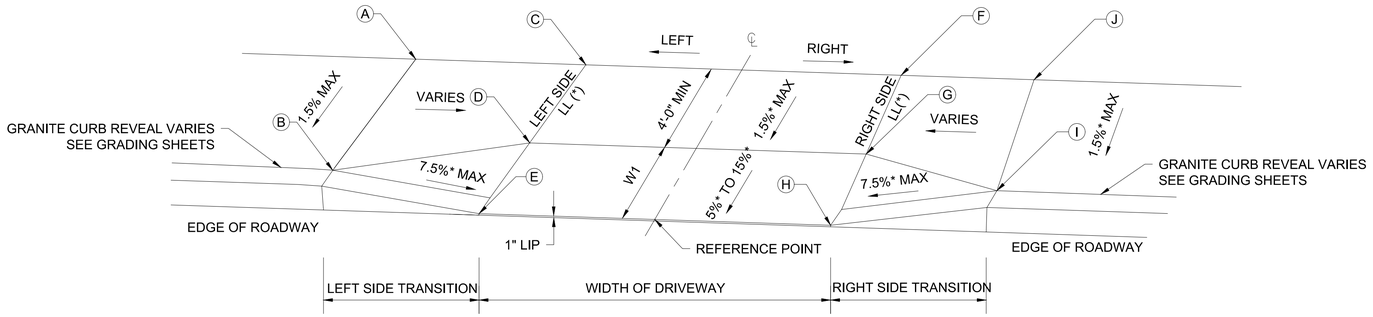

* LL: LEVEL LANDING

TYPE 2: TRANSITION CURB DRIVEWAY

NOT TO SCALE

NOTE:

GRADES E AND H CORRESPOND TO TOP OF CONCRETE
1" ABOVE PROPOSED ROADWAY SURFACE

	DRIVE REFERENCE POINT			LENGTH OF PRIMARY RAMP (W1)			DEPTH OF LEVEL LANDING (LL)			WIDTH OF DRIVEWAY	ROADWAY GUTTER SLOPE	TRANSITION LENGTH			ELEVATION							
DRIVE #	STATION	OFFSET		(LEFT	-	RIGHT)	(LEFT	-	RIGHT)			(LEFT	-	RIGHT)	A	B	C	D	E	F	G	H	I	J
7	20+06.59	10.50	R	1.00	-	1.00	13.60	-	13.57	17.10	0.47%	4	-	6.5	20.33	20.21	20.34	20.14	19.99	20.32	20.06	19.91	20.22	20.31
8	21+80.62	11.50	L	5.50	-	5.50	9.10	-	9.01	18.00	0.06%	7.67	-	N/A	19.76	19.8	20.09	20.23	19.40	20.08	20.22	19.39	N/A	N/A
10	23+33.28	11.00	R	1.00	-	1.00	11.67	-	11.74	11.45	0.35%	6.50	-	3.25	22.08	21.9	22.14	21.97	21.82	22.18	22.01	21.86	21.85	22.03
11	24+11.67	11.00	R	1.00	-	1.00	11.28	-	11.28	11.45	0.96%	4.50	-	3.25	22.91	22.74	22.85	22.69	22.54	22.74	22.58	22.43	22.54	22.66
14	29+50.25	14.33	L	4.00	-	4.00	4.00	-	4.13	14.33	0.35%	7.67	-	7.67	29.67	29.58	29.75	29.69	29.09	29.80	29.74	29.14	29.69	29.8
15	29+47.70	10.00	R	3.00	-	3.00	13.90	-	14.12	12.30	0.24%	3.84	-	3.14	29.94	29.7	29.97	29.76	29.44	29.86	29.65	29.41	29.58	29.82
16	30+14.08	10.00	R	1.00	-	1.00	14.34	-	14.38	11.96	0.42%	6.50	-	6.50	29.96	29.88	29.93	29.72	29.59	29.94	29.73	29.64	29.96	29.99
17	31+16.18	17.50	L	4.00	-	4.00	4.00	-	4.37	14.92	0.07%	9.00	-	9.00	30.17	30.06	30.07	30.01	29.41	30.06	30.00	29.40	29.96	30.07
18	31+34.70	11.00	R	1.00	-	1.00	11.53	-	11.46	11.93	0.34%	6.50	-	6.50	30.16	29.98	30.10	29.93	29.78	30.06	29.89	29.74	30.00	30.07
19	31+66.65	17.50	L	4.00	-	4.00	4.37	-	4.19	29.37	0.03%	9.00	-	5.16	30.06	29.95	30.05	29.99	29.44	30.09	30.03	29.43	29.96	30.07
20	31+89.21	11.00	R	1.00	-	1.00	12.44	-	12.21	17.74	0.00%	3.25	-	6.50	30.04	29.85	30.05	29.87	29.72	30.05	29.87	29.72	29.96	30.03
21	32+23.50	17.50	L	3.50	-	3.50	4.45	-	4.82	10.17	0.59%	11.00	-	6.50	30	29.95	29.90	29.84	29.43	30.08	30.01	29.49	29.88	29.95
22	33+96.43	17.50	L	4.00	-	4.00	4.23	-	4.23	28.51	0.84%	9.00	-	6.50	29.34	29.23	29.22	29.16	28.56	28.90	28.84	28.32	28.78	28.89
25	36+06.53	11.00	R	1.00	-	1.00	12.30	-	12.22	18.59	0.54%	3.25	-	3.83	28.09	27.92	28.11	27.93	27.82	28.18	28.00	27.92	28.04	28.17
26	36+35.31	11.00	R	2.00	-	2.00	11.34	-	11.30	15.53	0.45%	3.25	-	3.83	28.11	27.92	28.13	27.96	27.68	28.07	27.90	27.75	27.89	28.07
27	40+21.00	11.00	R	1.00	-	1.00	12.32	-	12.07	14.94	0.07%	3.82	-	3.26	26.73	26.63	26.67	26.55	26.51	26.71	26.59	26.50	26.64	26.69
29.1	45+93.66	23.50	L	1.50	-	1.50	14.01	-	19.84	22.09	0.32%	3.40	-	3.79	27.16	27.16	27.17	27.17	27.17	27.24	27.14	27.10	27.28	27.59
30	133+52.25	13.28	R	2.00	-	2.00	4.86	-	4.86	26.71	1.91%	6.50	-	9.00	26.19	26.1	26.06	25.99	25.85	26.63	26.56	26.36	26.55	26.64
31	134+29.94	8.72	L	4.50	-	4.50	6.69	-	6.63	29.54	0.71%	6.50	-	6.50	25.52	25.36	25.43	25.33	24.99	25.41	25.32	24.78	25.24	25.39
32	134+91.10	8.72	L	3.50	-	3.50	7.55	-	7.50	25.36	0.28%	7.67	-	7.67	25.2	25.05	25.05	24.94	24.48	25.03	24.92	24.41	24.94	25.09
33	136+72.24	13.28	R	3.50	-	3.50	4.45	-	4.45	47.61	0.76%	6.50	-	7.67	23.34	23.23	23.42	23.36	22.85	23.74	23.68	23.21	23.65	23.76
34	61+10.14	12.99	R	4.00	-	4.00	5.57	-	7.71	17.85	0.34%	6.47	-	6.47	20.1	19.97	20.15	20.07	19.88	20.41	20.33	19.94	20.33	20.44
35	63+95.28	16.50	L	3.50	-	3.50	4.86	-	4.78	22.46	0.49%	6.50	-	9.00	22.53	22.51	22.44	22.37	22.05	22.74	22.67	22.16	22.66	22.77
36	64+14.95	16.50	R	2.50	-	2.50	3.82	-	3.66	22.00	1.68%	6.50	-	6.48	22.83	22.78	22.77	22.72	22.42	22.47	22.42	22.05	22.35	22.43
37	64+39.84	16.50	L	2.50	-	2.50	5.68	-	5.61	18.18	0.83%	6.50	-	4.00	22.77	22.66	22.43	22.40	22.22	22.40	22.37	22.37	22.67	22.7
38	64+72.78	16.50	L	2.50	-	2.50	5.58	-	5.45	31.51	1.36%	4.00	-	5.08	22.7	22.67	22.86	22.78	22.56	23.19	23.11	22.99	23.26	23.37
39	65+13.84	16.50	L	2.50	-	2.50	5.95	-	6.03	30.38	0.95%	5.00	-	9.00	23.38	23.27	23.38	23.32	23.12	23.83	23.74	23.41	24.08	24.2

NOTES:

1. SEE CONSTRUCTION PLANS AND CURB TIE PLANS FOR LOCATION OF DRIVEWAYS.
2. FINAL DRIVEWAY ELEVATIONS SHALL GRADE TO DRAIN AND LAYOUT SHALL BE APPROVED BY ENGINEER PRIOR TO PLACEMENT.
3. ALL DRIVEWAY GRADES SHALL CONFORM TO THE LATEST EDITION OF MASSDOT CONSTRUCTION STANDARD.
4. * = TOLERANCE FOR CONSTRUCTION ± 0.5%

File: C:\PW\WORKING\EAST01\D0786396\7113XXX_(ROADWAY DETAILS).DWG Plotted: 4/25/2022
11:08:37 AM

ISSUED FOR BID

HDR ENGINEERING, INC.
99 HIGH STREET, SUITE 2300
BOSTON, MASSACHUSETTS 02110-2378
(617) 357-7700

COMMONWEALTH OF MASSACHUSETTS
PHILIP FUSCO
CIVIL
No. 45868
REGISTERED PROFESSIONAL ENGINEER

Scale			
Date			
Job No.			
Designed by			
Drawn by			
Checked by	No.	Description	Date
Approved by	REVISIONS		

THE WORKS — CAMBRIDGE DEPARTMENT OF PUBLIC

Client	CITY OF CAMBRIDGE, MA	Sheet	RD-1.08
Project	RIVER STREET INFRASTRUCTURE AND STREETSCAPE PROJECT	Total Sheets	381
Drawing	**DRIVEWAY AND RAMP DETAILS - 3**	File No.	

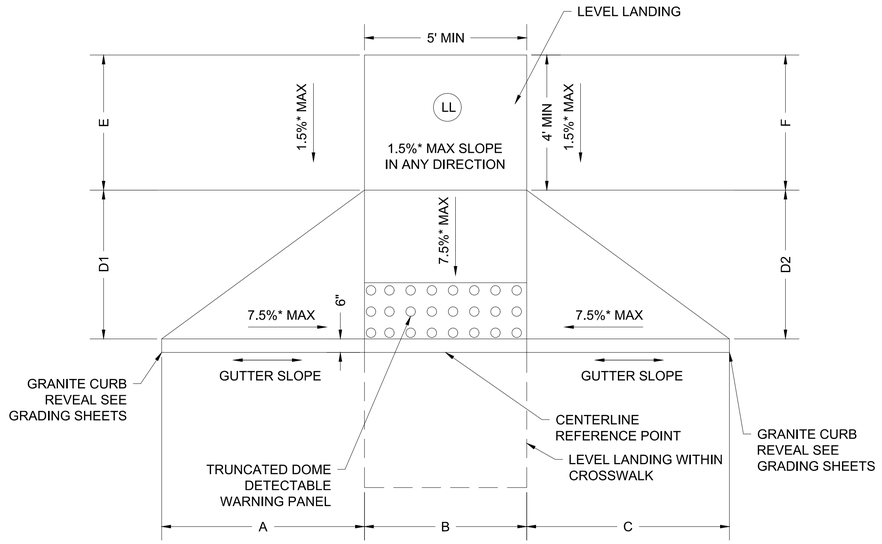

* LL: LEVEL LANDING

TYPE 1: PEDESTRIAN CEMENT CONCRETE RAMP

NOT TO SCALE

PEDESTRIAN RAMP DATA

	RAMP REFERENCE POINT			TRANS L	TRANS W	TRANS R	RAMP LENGTH		LANDING LENGTH	
RAMP #	STATION	OFFSET		A	B	C	D1	D2	E	F
1	12+16.39	10.75	L	12.36	5.00	8.71	4.06	4.06	4.06	4.06
1.1	12+04.70	29.66	L	6.53	5.00	6.50	4.00	4.00	4.00	4.00
2.1	11+80.97	34.67	R	4.09	5.35	3.26	4.00	4.00	4.00	4.00
3	16+28.31	10.50	L	6.50	5.00	9.20	4.00	4.00	4.00	4.00
5	16+79.56	10.50	L	8.01	5.00	6.50	4.00	4.00	4.00	4.00
8	18+49.33	38.87	R	3.24	5.00	5.03	4.50	4.50	4.00	4.00
9	18+55.78	10.50	L	6.50	5.00	7.67	7.00	7.00	4.00	4.00
10	18+86.20	26.55	L	7.74	5.00	6.50	6.00	6.00	4.00	4.00
11	19+11.69	27.42	L	6.50	5.00	9.34	4.00	4.00	4.00	4.00
12	18+93.22	30.40	R	4.50	5.00	3.25	2.00	2.00	4.15	4.21
14	19+23.29	11.50	L	9.34	5.00	6.50	4.00	4.00	4.00	4.00
15	21+97.66	11.50	L	N/A	8.00	7.04	5.00	5.00	4.00	4.00
15.1	71+23.15	5.13	R	6.00	6.00	5.00	5.00	5.00	4.00	4.00
16	21+94.82	16.00	R	N/A	5.00	5.00	2.75	2.75	5.03	5.04
17	24+48.86	11.50	L	6.50	5.00	1.55	2.50	2.50	4.00	4.00
19	27+59.61	11.50	L	6.50	5.00	9.00	3.00	3.00	4.00	4.00
20.1	27+77.32	28.61	R	3.25	5.00	1.88	5.00	5.00	4.00	4.00
21	27+77.25	21.95	L	6.50	5.00	6.50	4.00	4.10	4.00	4.00
22	28+00.96	20.44	L	6.50	5.00	6.63	4.03	3.37	4.00	4.00
23	28+25.66	11.50	L	6.50	5.00	9.00	3.00	3.00	4.00	4.00
24.1	28+05.29	26.99	R	2.04	5.00	3.23	6.00	6.00	4.00	4.00
25	32+69.79	11.50	L	7.67	5.00	6.43	3.50	3.50	4.00	4.00
27	33+17.04	11.50	L	9.37	5.00	6.50	5.00	5.00	4.00	4.00
34	35+72.00	11.50	L	9.56	5.00	6.50	4.00	4.00	4.00	4.00
36	38+83.44	11.50	L	6.50	5.00	6.50	4.00	4.00	4.00	4.00
38	41+55.68	11.50	L	6.50	5.00	7.46	4.00	4.00	4.00	4.00
40	41+69.93	20.42	L	3.32	5.00	5.50	4.00	4.00	4.00	4.00
41	41+84.72	34.32	R	6.50	5.00	4.50	2.50	2.50	4.16	4.26
42	42+02.58	24.13	L	8.00	5.00	3.25	4.00	4.00	5.45	5.22
43	42+09.61	10.96	L	6.18	5.00	3.25	3.77	6.24	4.00	4.00
44	42+13.55	38.47	R	3.83	5.00	3.25	2.50	2.50	4.00	4.00
47	44+65.79	36.03	R	3.25	5.00	3.25	2.00	2.00	4.00	4.00
48	44+95.78	21.13	R	6.50	5.00	7.67	2.50	2.50	4.00	4.00
49	44+98.48	44.19	R	3.85	5.00	6.50	2.50	2.50	4.00	4.00
50	44+39.87	53.95	L	4.50	5.00	3.83	2.50	2.50	4.00	4.00
52	46+91.25	40.19	L	8.23	10.00	3.41	9.07	6.84	10.90	11.00
53	47+07.85	59.05	L	3.10	10.95	6.50	7.42	10.48	5.00	5.00
54	47+01.88	32.00	R	4.09	10.00	6.00	5.44	8.23	10.00	10.00
55	47+21.64	43.78	R	6.07	10.00	4.89	12.89	7.12	10.00	10.00
56	133+15.99	13.28	R	6.50	5.00	4.60	3.92	2.50	4.00	4.00
56.1	132+74.57	23.84	R	6.50	5.00	6.50	4.00	4.00	4.00	4.00
57	133+20.30	8.72	L	6.50	5.00	6.50	4.00	4.00	4.00	4.00
58	63+20.90	10.53	L	6.50	5.00	6.50	4.00	4.00	4.00	4.00
59	63+20.90	10.47	R	6.50	5.00	6.50	6.00	6.00	4.00	4.00
60	124+18.11	12.00	L	6.50	5.00	6.93	3.25	3.25	4.20	4.21
61	124+16.20	21.09	R	5.26	5.00	6.86	4.00	4.00	4.00	4.00
62	112+43.44	30.51	L	4.34	5.00	3.17	2.30	2.25	5.95	6.06
63	112+40.70	43.77	L	9.81	5.13	4.40	2.50	2.56	5.00	5.00
64	111+98.21	11.24	R	6.00	5.00	3.96	4.40	4.40	4.00	4.00
65	111+85.69	14.87	R	4.72	5.00	6.39	4.75	4.75	5.50	5.50
66	111+55.54	17.76	R	8.69	5.00	3.19	4.50	4.50		

NOTES:
1. SEE CONSTRUCTION PLANS AND CURB TIE PLANS FOR LOCATION OF RAMPS.
2. FINAL RAMP ELEVATIONS SHALL GRADE TO DRAIN AND LAYOUT SHALL BE APPROVED BY ENGINEER PRIOR TO PLACEMENT.
3. ALL PEDESTRIAN RAMP GRADES SHALL CONFORM TO THE LATEST EDITION OF MASSDOT CONSTRUCTION STANDARD.
4. * = TOLERANCE FOR CONSTRUCTION ± 0.5%

ISSUED FOR BID

HDR ENGINEERING, INC.
99 HIGH STREET, SUITE 2300
BOSTON, MASSACHUSETTS 02110–2378
(617) 357–7700

COMMONWEALTH OF MASSACHUSETTS
PHILIP FUSCO
CIVIL
No. 45868
REGISTERED PROFESSIONAL ENGINEER

Scale			
Date			
Job No.			
Designed by			
Drawn by			
Checked by	No.	Description	Date
Approved by	REVISIONS		

CAMBRIDGE DEPARTMENT OF PUBLIC WORKS

Client: CITY OF CAMBRIDGE, MA
Project: RIVER STREET INFRASTRUCTURE AND STREETSCAPE PROJECT
Drawing: **DRIVEWAY AND RAMP DETAILS - 4**
Sheet: RD-1.09
Total Sheets: 381
File No.

File: C:\PW\WORKING\EAST01\D0786396\7113XXX_(ROADWAY DETAILS).DWG Plotted: 4/25/2022 7:11:07 AM

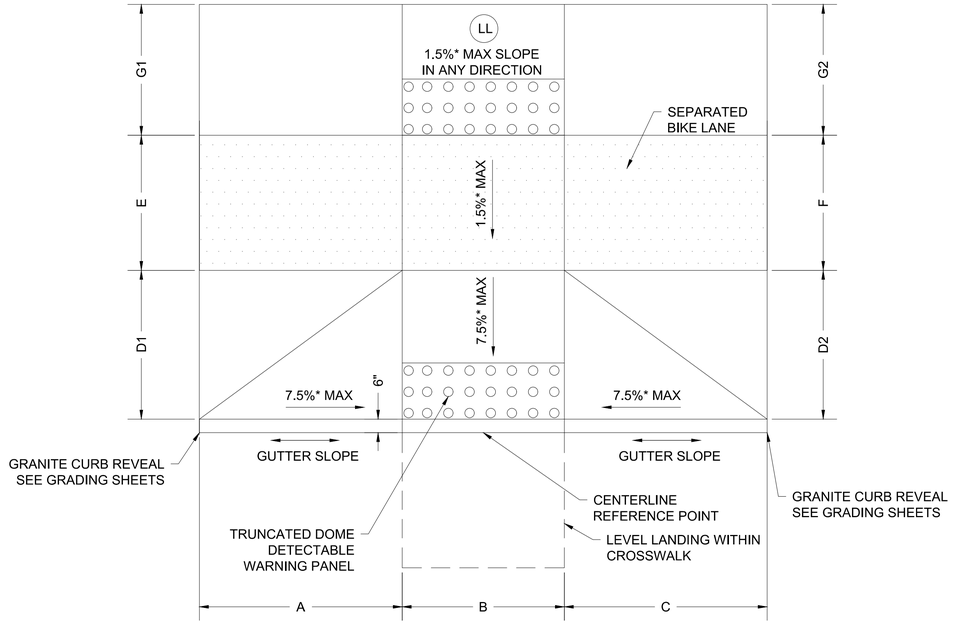

* LL: LEVEL LANDING

TYPE 2: PEDESTRIAN CEMENT CONCRETE RAMP WITH CYCLE TRACK

NOT TO SCALE

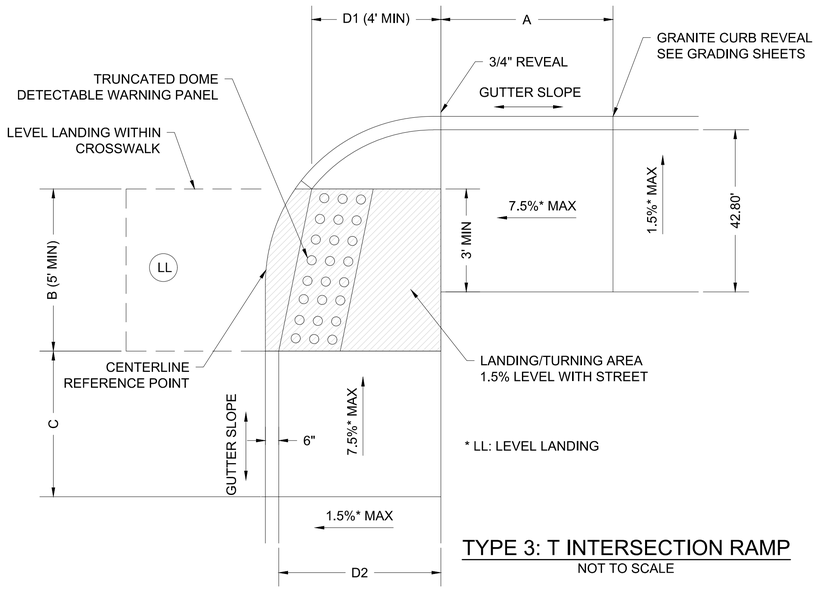

* LL: LEVEL LANDING

TYPE 3: T INTERSECTION RAMP

NOT TO SCALE

PEDESTRIAN RAMP DATA (CONT'D)

	RAMP REFERENCE POINT			TRANS L	TRANS W	TRANS R	RAMP LENGTH		LANDING LENGTH		RAMP LENGTH	
RAMP #	STATION	OFFSET		A	B	C	D1	D2	E	F	G1	G2
2	12+10.66	11.00	R	3.25	5.00	7.50	2.50	2.50	6.00	6.00	4.00	4.00
4	16+28.31	11.00	R	4.50	5.00	3.25	4.00	4.00	6.00	6.00	5.53	6.04
6	16+79.89	11.00	R	3.25	5.00	3.25	4.00	4.00	6.00	6.00	5.61	5.60
7	18+38.33	13.16	R	3.25	5.00	3.25	5.63	5.93	6.00	6.00	4.49	4.17
13	19+13.61	10.50	R	3.22	8.00	3.83	2.00	2.00	5.61	5.73	4.67	4.88
18	24+49.40	11.00	R	4.07	5.00	3.25	2.00	2.00	5.50	5.50	4.22	4.25
20	27+56.51	11.00	R	4.50	5.00	3.25	6.30	6.30	6.00	6.00	4.00	4.00
24	28+27.34	10.87	R	3.25	5.00	3.25	5.07	5.19	6.00	6.00	4.00	4.00
26	32+74.00	11.00	R	4.50	5.00	3.83	2.50	2.50	6.00	6.00	4.43	4.45
28	33+14.53	11.00	R	5.00	5.00	3.83	4.00	4.00	6.00	6.00	4.01	4.05
33	35+21.71	11.00	R	3.25	5.00	3.83	2.50	2.50	4.99	5.00	4.72	4.72
35	35+73.09	11.00	R	3.25	5.00	3.83	2.50	2.50	4.99	4.99	5.18	5.13
37	38+96.68	11.00	R	3.25	5.00	4.50	2.00	2.00	6.00	5.97	4.98	5.03
39	41+61.65	11.00	R	6.50	5.00	4.00	5.38	4.74	6.03	6.00	6.89	6.89
45	42+20.83	20.00	R	4.50	5.00	3.25	4.62	4.51	6.48	6.48	7.50	3.11
46	44+41.99	13.11	R	4.00	6.00	3.25	6.13	5.86	5.79	5.83	4.06	4.03
51	44+67.11	28.15	L	3.50	5.00	4.50	2.50	2.50	6.50	6.54	4.00	4.00

	RAMP REFERENCE POINT			TRANS L	TRANS W	TRANS R	LANDING LENGTH	
RAMP #	STATION	OFFSET		A	B	C	D1	D2
31	80+78.76	18.38	R	8.69	5.00	6.50	4.18	5.14

NOTES:

1. SEE CONSTRUCTION PLANS AND CURB TIE PLANS FOR LOCATION OF RAMPS.
2. FINAL RAMP ELEVATIONS SHALL GRADE TO DRAIN AND LAYOUT SHALL BE APPROVED BY ENGINEER PRIOR TO PLACEMENT.
3. ALL PEDESTRIAN RAMP GRADES SHALL CONFORM TO THE LATEST EDITION OF MASSDOT CONSTRUCTION STANDARD.
4. * = TOLERANCE FOR CONSTRUCTION ± 0.5%

ISSUED FOR BID

HDR ENGINEERING, INC.
99 HIGH STREET, SUITE 2300
BOSTON, MASSACHUSETTS 02110–2378
(617) 357–7700

COMMONWEALTH OF MASSACHUSETTS
PHILIP FUSCO
CIVIL
No. 45868
REGISTERED PROFESSIONAL ENGINEER

Scale			
Date			
Job No.			
Designed by			
Drawn by			
Checked by	No.	Description	Date
Approved by	REVISIONS		

THE WORKS — CAMBRIDGE DEPARTMENT OF PUBLIC WORKS

Client: CITY OF CAMBRIDGE, MA

Project: RIVER STREET
INFRASTRUCTURE AND STREETSCAPE PROJECT

Drawing: **DRIVEWAY AND RAMP DETAILS - 5**

Sheet: RD-1.10

Total Sheets: 381

File No.:

File: C:\PWWORKING\EAST01\D07863967113XXX_(ROADWAY DETAILS).DWG Plotted: 4/25/2022 7:11:48 AM

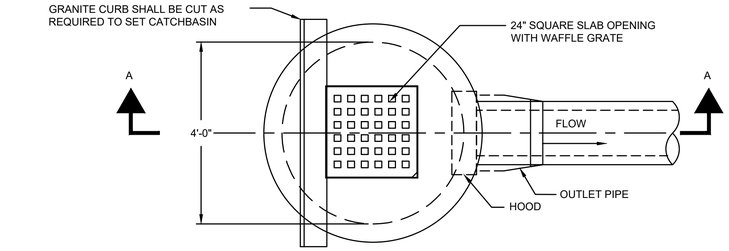

PLAN

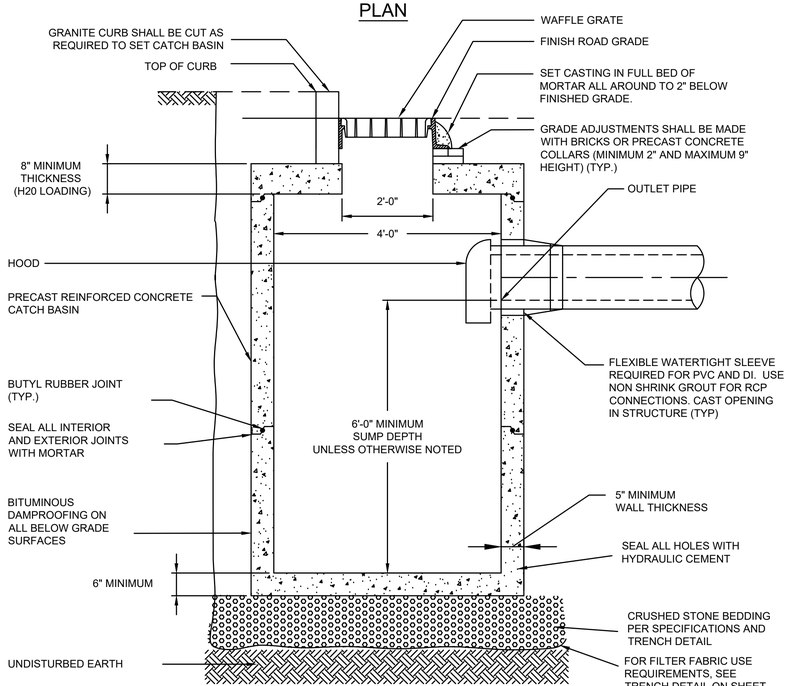

SECTION A-A

CATCH BASIN - TYPE 1 SINGLE GRATE

NTS

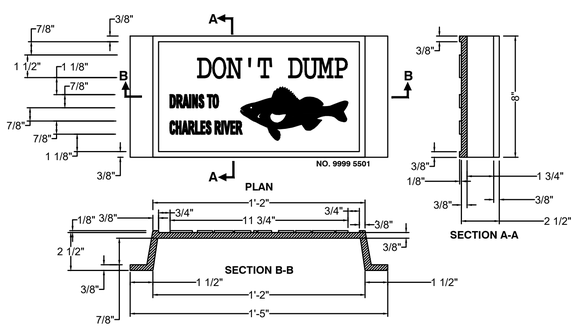

"DON'T DUMP" CATCH BASIN SIDEWALK MARKER*

NTS

*FURNISHED BY CITY

GENERAL NOTES FOR CATCH BASINS:
1. FACE OF PIPE SHALL NOT PROJECT MORE THAN 4-INCHES FROM FACE OF WALL ALONG CENTERLINE OF PIPE.
2. FOR DESCRIPTION OF MATERIALS AND CONSTRUCTION METHOD, SEE SPECIFICATIONS.
3. DESIGN PRECAST SECTIONS WITH FRAME AND GRATE FOR AASHTO H20 LOADING.
4. GRATE OPENING CAN BE CENTERED OR OFFSET PERPENDICULAR TO THE CURB.
5. FOR CATCH BASINS INSTALLED ABUTTING GRANITE CURBS, USE 3-FLANGED FRAMES.
6. "DON'T DUMP" SIDEWALK MARKERS FURNISHED BY THE CITY SHALL BE INSTALLED ADJACENT TO ALL CATCH BASINS AND INLETS IN THE PROJECT AREA.

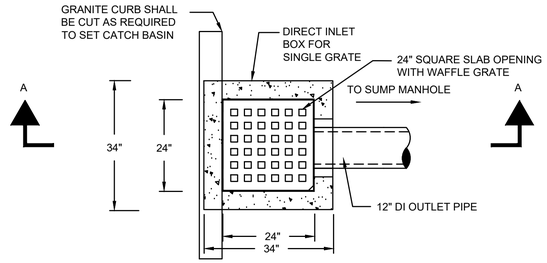

SINGLE GRATE PLAN

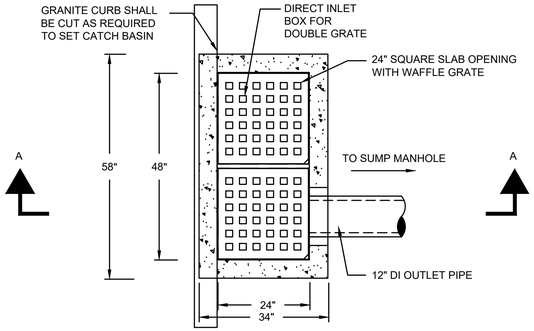

DOUBLE GRATE PLAN

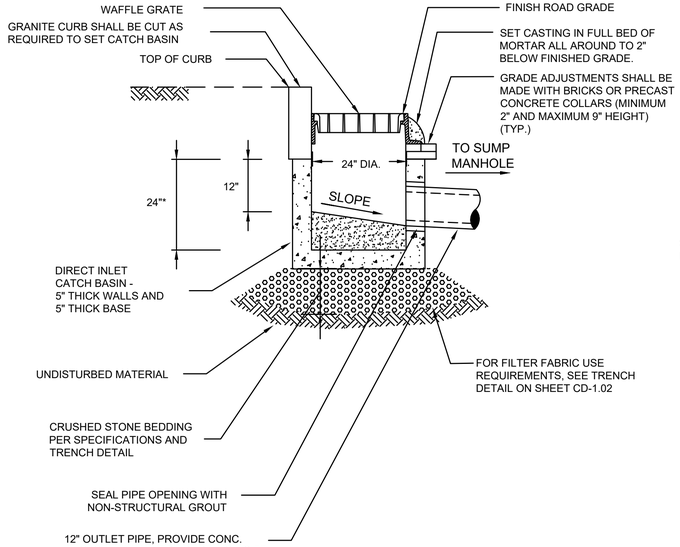

SECTION A-A

CATCH BASIN - TYPE 5 DIRECT INLET

NTS

NOTES:
1. 18" MIN. ALLOWED WHEN CONFLICT WITH UTILITIES EXISTS AND WITH THE APPROVAL OF THE ENGINEER.
2. WHERE ANGLED PIPE CONNECTIONS ARE REQUIRED BY THE DRAWINGS OR FIELD CONNECTIONS, THE CONTRACTOR SHALL COORDINATE WITH THE PRECAST SUPPLIER, PRIOR TO ORDERING, TO PROVIDE CAST OPENINGS AND SUFFICIENT STRUCTURAL REINFORCEMENT. THE CONTRACTOR SHALL SUBMIT THE INDIVIDUAL CATCH BASINS FOR ENGINEE REVIEW AND APPROVAL.
3. WHERE MIN. DEPTH OF COVER CAN NOT BE MET, PROVIDE CLASS 56 DI PIPE WITH 6" CDF ENCASEMENT ALL AROUND THE PIPE. NON-FLY ASH MIX SHALL BE USED.

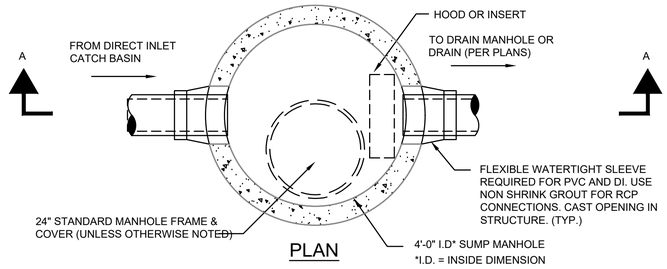

PLAN

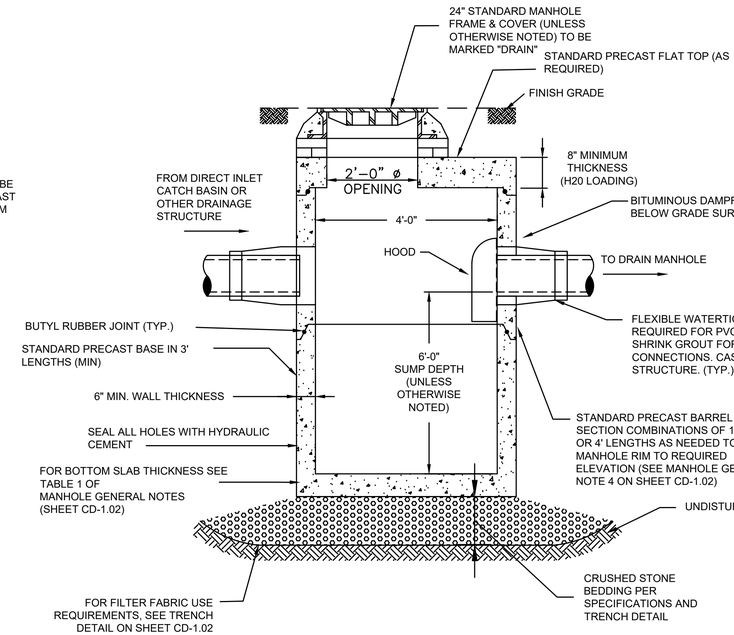

SECTION A-A

DRAIN MANHOLE DETAIL - SUMP MANHOLE

NTS

ISSUED FOR BID

HDR ENGINEERING, INC.
99 HIGH STREET, SUITE 2300
BOSTON, MASSACHUSETTS 02110-2378
(617) 357-7700

COMMONWEALTH OF MASSACHUSETTS
PHILIP FUSCO
CIVIL
No. 45868
REGISTERED PROFESSIONAL ENGINEER

Scale			
Date			
Job No.			
Designed by			
Drawn by			
Checked by	No.	Description	Date
Approved by	REVISIONS		

THE WORKS — CAMBRIDGE DEPARTMENT OF PUBLIC

Client	CITY OF CAMBRIDGE, MA	Sheet	CD-1.01
Project	RIVER STREET INFRASTRUCTURE AND STREETSCAPE PROJECT	Total Sheets	381
Drawing	**SEWER AND WATER DETAILS - 1**	File No.	

File: C:\PWWORKING\EAST01\D0786396\I7113XXX_(CIVIL DETAILS).DWG Plotted: 4/15/2022 2:33:15 PM

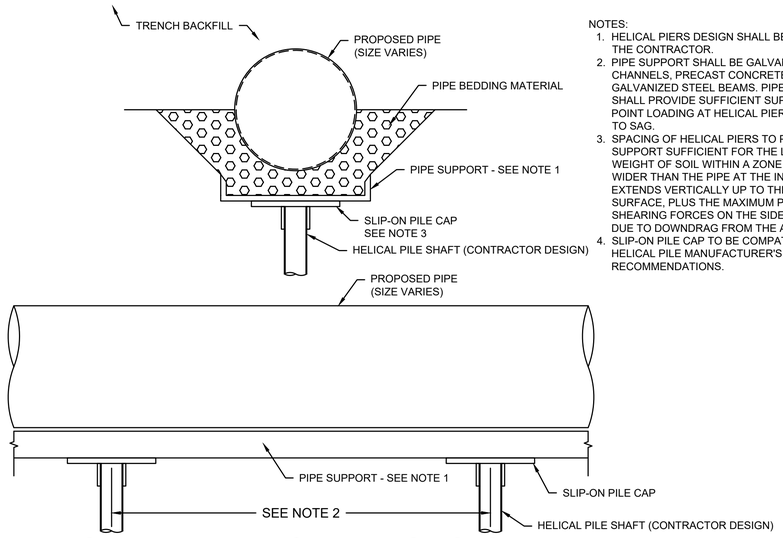

NOTES:
1. HELICAL PIERS DESIGN SHALL BE PROVIDED BY THE CONTRACTOR.
2. PIPE SUPPORT SHALL BE GALVANIZED STEEL CHANNELS, PRECAST CONCRETE PLANKS, OR GALVANIZED STEEL BEAMS. PIPE SUPPORTS SHALL PROVIDE SUFFICIENT SUPPORT TO AVOID POINT LOADING AT HELICAL PIERS CAUSING PIPE TO SAG.
3. SPACING OF HELICAL PIERS TO PROVIDE SUPPORT SUFFICIENT FOR THE LOADING OF THE WEIGHT OF SOIL WITHIN A ZONE THAT IS 6" WIDER THAN THE PIPE AT THE INVERT AND EXTENDS VERTICALLY UP TO THE GROUND SURFACE, PLUS THE MAXIMUM POTENTIAL SHEARING FORCES ON THE SIDES OF THIS ZONE DUE TO DOWNDRAG FROM THE ADJACENT SOIL.
4. SLIP-ON PILE CAP TO BE COMPATIBLE WITH HELICAL PILE MANUFACTURER'S RECOMMENDATIONS.

HELICAL PIER PIPE FOUNDATION SYSTEM
NTS

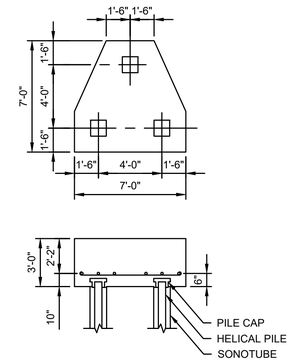

REINFORCEMENT TO EXTEND THREE WAYS. MANHOLE TO BE CENTERED OVER PILE CAPS. CONTRACTOR TO DESIGN HELICAL PIER FOUNDATION SYSTEM PER MANUFACTURER'S RECOMMENDATIONS.

HELICAL PIER MANHOLE FOUNDATION SYSTEM
NTS

TABLE 1				
MANHOLE DIAMETER	SIDE WALL MIN. THICKNESS	BOTTOM SLAB MIN. THICKNESS	MAX PIPE DIAMETER * RCP	DI/PVC
4'	5"	6"	24"	30"
5'	6"	8"	36"	42"
6'	6"	8"	48"	54"
8'	8"	8"	66"	72"
10'	10"	10"	72"	84"

* MAY VARY DEPENDING ON SIZE AND LOCATION OF ADDITIONAL PENETRATIONS OR RELATIONSHIP OF PENETRATIONS IN MANHOLE

WALL THICKNESS	MAX TRENCH WIDTH
LESS THAN 6"	I.D. + 5'-0"
6" TO 12"	I.D. + 6'-0"
13" TO 18"	I.D. + 7'-0"
19" & GREATER	I.D. + 6'-0"

I.D. = INSIDE DIMENSION
O.D. = OUTSIDE DIMENSION

FOR TRENCHES GREATER THAN 5' DEEP AND 3' FOR TEMPORARY SUPPORT OF EXCAVATION

MANHOLE GENERAL NOTES:

1. INNER EDGE OF BRICK TABLE TO BE AT ELEVATION OF CROWN OF TOP OF PIPE. TABLE TO SLOPE AT 8.3% TO INSIDE OF MANHOLE BASE.

2. SEWER OR DRAIN MANHOLE DIAMETER SHALL BE 4', 5', 6' OR 8' AS SHOWN ON PLAN / PROFILE VIEWS.

3. DESIGN PRECAST AND CAST IN PLACE SECTIONS WITH FRAME AND COVER FOR AASHTO H20 LOADINGS UNLESS OTHERWISE NOTED.

4. MANHOLES LARGER THAN 4' IN DIAMETER AT THE BASE SHALL BE REDUCED IN DIAMETER TO 4' AT THE NEXT RISER SECTION UNLESS NOTED OTHERWISE ON PLANS.

MANHOLE GENERAL NOTES AND DIMENSIONS

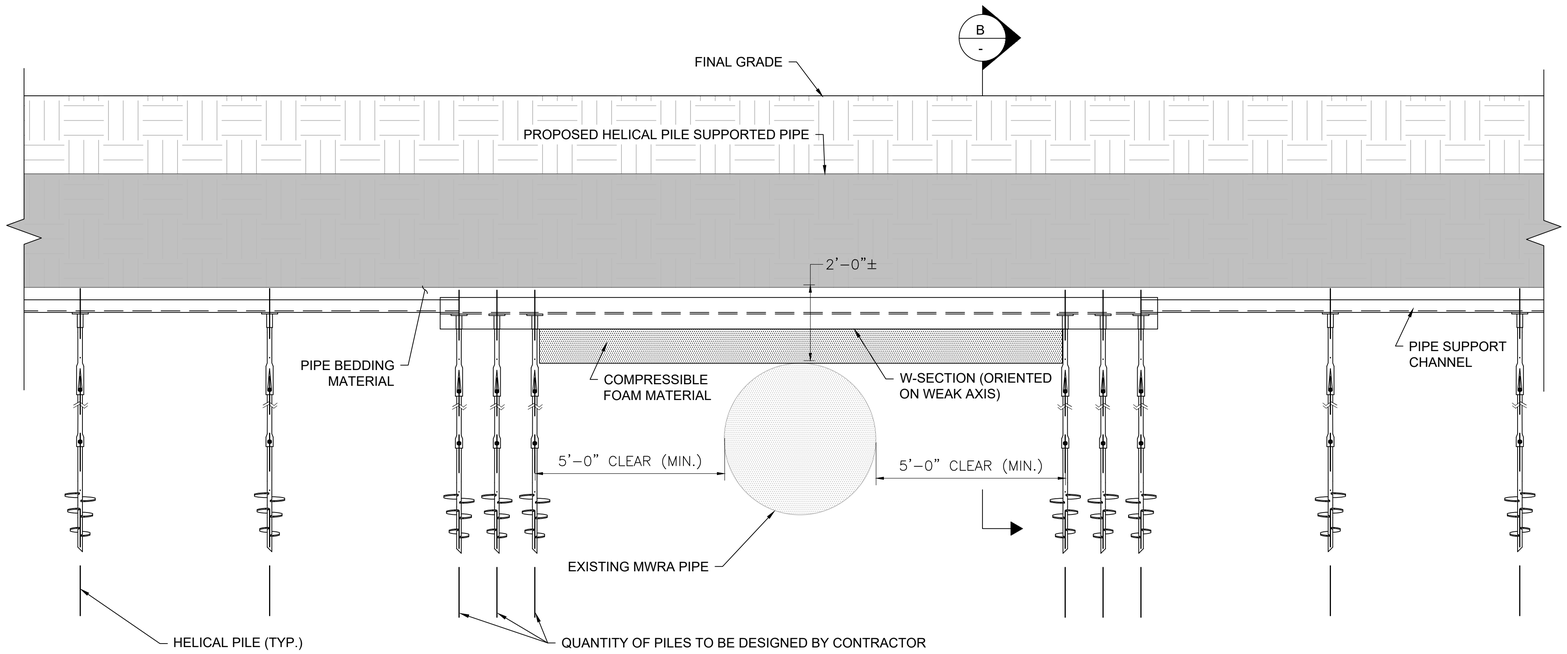

MWRA PIPE SPAN (2FT CLEARANCE)
SCALE: 1/2" = 1'-0"

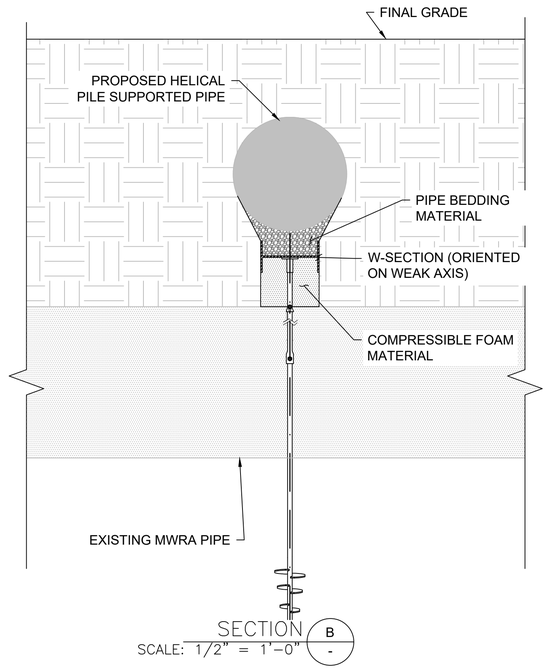

CONFORMED SET

HDR ENGINEERING, INC.
99 HIGH STREET, SUITE 2300
BOSTON, MASSACHUSETTS 02110-2378
(617) 357-7700

COMMONWEALTH OF MASSACHUSETTS
HUGH J. NEENAN
CIVIL
No. 34694
REGISTERED PROFESSIONAL ENGINEER
Hugh J. Neenan
08-24-22

Scale			
Date			
Job No.			
Designed by			
Drawn by	0	CONFORMED SET	8/5/2022
Checked by	No.	Description	Date
Approved by	REVISIONS		

THE WORKS — CAMBRIDGE DEPARTMENT OF PUBLIC

Client	CITY OF CAMBRIDGE, MA
Project	RIVER STREET INFRASTRUCTURE AND STREETSCAPE PROJECT
Drawing	**SEWER AND WATER DETAILS - 2**
Sheet	CD-1.02
Total Sheets	381
File No.	

File: C:\PWWORKING\EAST01\D0786396\7113XXX_(CIVIL DETAILS).DWG Plotted: 8/22/2022 6:06:55 PM

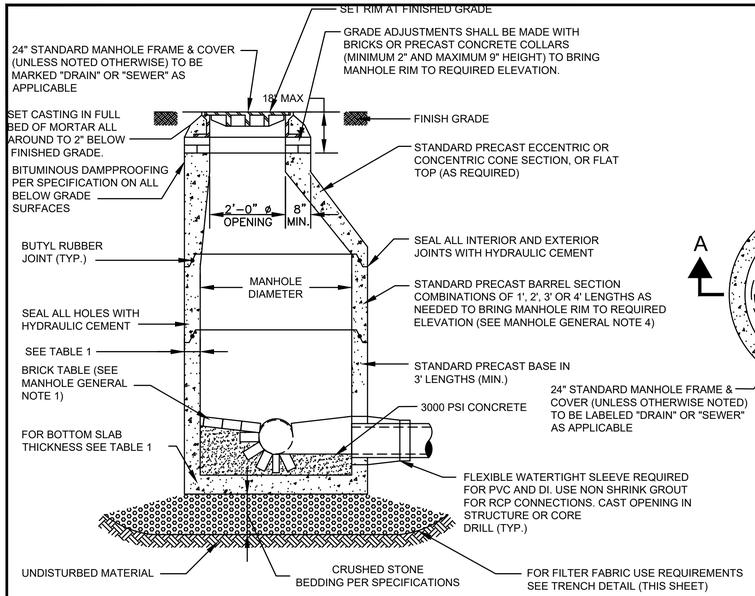

SECTION A-A

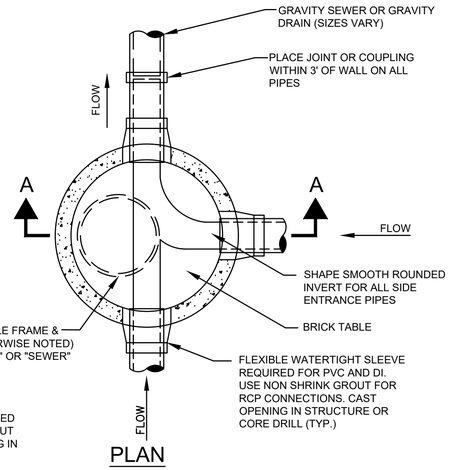

PLAN

MANHOLE DETAIL - TYPE 1

NTS

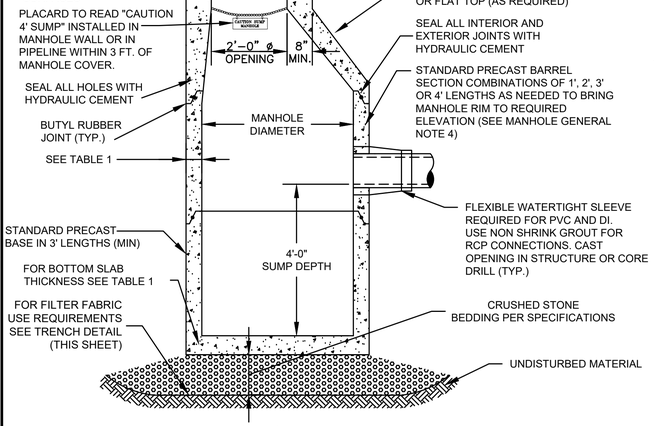

SECTION A-A

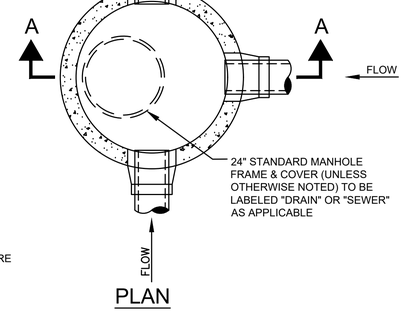

PLAN

DRAIN MANHOLE DETAIL - TYPE 4

NTS

NOTES:

1. PROVIDE HYDRANT AND VALVE JOINTS WITH APPROVED MECHANICAL JOINTS.
2. SUPPORT BLOCKS TO BE PRESSURE TREATED WOOD OR CONCRETE MASONRY BLOCK.
3. ALL VALVES OPEN LEFT.
4. PROVIDE JOINT RESTRAINT AND THRUST BLOCK PER CITY WATER DEPARTMENT STANDARDS PER SPECIFICATION.

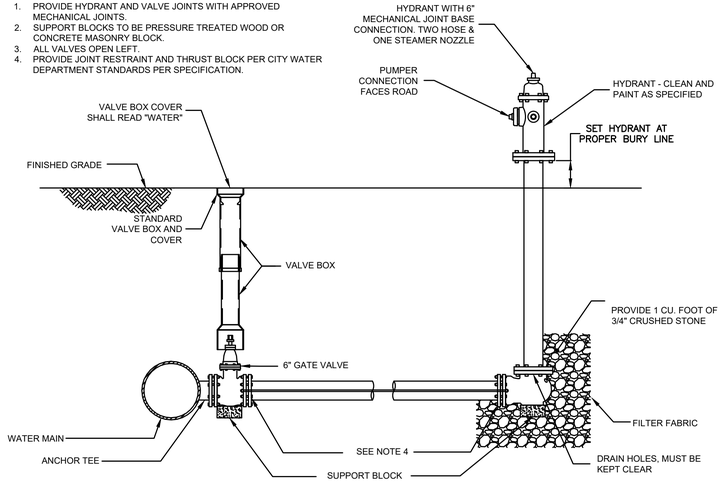

FIRE HYDRANT DETAIL

NTS

NOTES:

1. ANY WATER MAIN TO BE ENCASED IN CONCRETE FOR STRUCTURAL PURPOSES SHALL BE ENCASED WITHIN FLOWABLE FILL WITH 0% ASH CONTENT
2. ALL GATE VALVES SHALL BE RESILIENT SEATED AND "OPEN RIGHT".

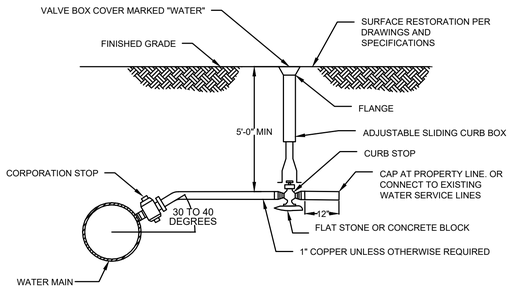

NEW WATER SERVICE DETAILS

NTS

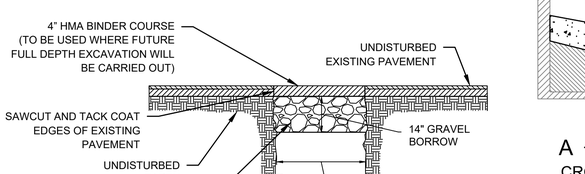

NOTE:

1. REMOVE AND DISPOSE ALL TEMPORARY PAVEMENT AS REQUIRED. RESTORE AND COMPACT SUBBASE AS REQUIRED PRIOR TO TRENCH PAVEMENT.

TEMPORARY TRENCH PAVEMENT DETAIL

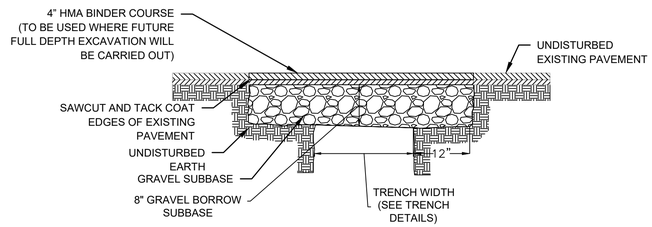

NOTE:

1. REMOVE AND DISPOSE ALL TEMPORARY PAVEMENT AS REQUIRED. RESTORE AND COMPACT SUBBASE AS REQUIRED PRIOR TO TRENCH PAVEMENT.

PERMANENT TRENCH PAVEMENT DETAIL

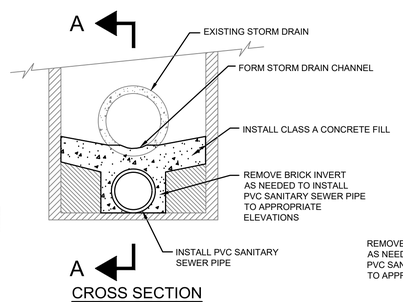

CROSS SECTION

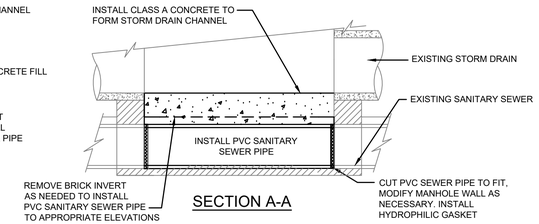

SECTION A-A

COMMON MANHOLE SEPARATION - TYPE 2
COMMON MANHOLE CONVERTED TO DRAIN MANHOLE DETAIL

NTS

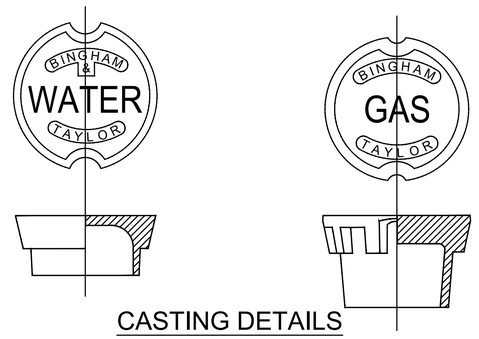

CASTING DETAILS

FIG. NO. 4905-L1.5
STANDARD ROUND DROP-IN LID

FIG. NO. 4905-L2.5
ROUND DROP-IN LID WITH 2 3/4" SKIRT

CONFORMED SET

HDR ENGINEERING, INC.
99 HIGH STREET, SUITE 2300
BOSTON, MASSACHUSETTS 02110-2378
(617) 357-7700

HUGH J. NEENAN CIVIL No. 34694 REGISTERED PROFESSIONAL ENGINEER COMMONWEALTH OF MASSACHUSETTS
Hugh J. Neenan
08-24-22

Scale			
Date			
Job No.			
Designed by			
Drawn by	0	CONFORMED SET	8/5/2022
Checked by	No.	Description	Date
Approved by	REVISIONS		

CAMBRIDGE DEPARTMENT OF PUBLIC WORKS — THE WORKS

Client	CITY OF CAMBRIDGE, MA	Sheet	CD-1.03
Project	RIVER STREET INFRASTRUCTURE AND STREETSCAPE PROJECT	Total Sheets	381
Drawing	**SEWER AND WATER DETAILS - 3**	File No.	

File: C:\PWWORKING\EAST01\D0786396\7113XXX_(CIVIL DETAILS).DWG Plotted: 8/22/2022 6:07:08 PM

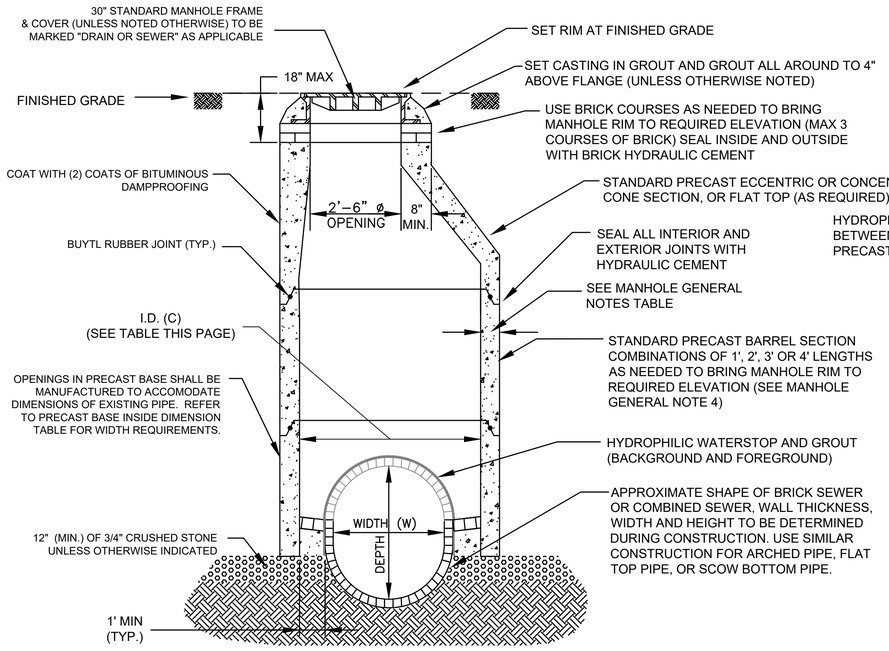

SECTION A-A

NOTES:
1. REMOVE EXISTING BRICK PIPE TO SPRING LINE WITHIN THE INSIDE OF THE PRECAST MANHOLE BASE AND CONSTRUCT THE INVERT TO THE SPRING LINE AS SHOWN.

MANHOLE DETAIL - TYPE 2 DROP OVER MANHOLE

NTS

PRECAST BASE INSIDE DIMENSION TABLE

WIDTH (W)	I.D. (C)
8" TO 24"	4' ø
27" TO 36"	5' ø
48" TO 66"	6' ø
66" TO 72"	8' ø
> 72"	10' ø

I.D. = INSIDE DIMENSION

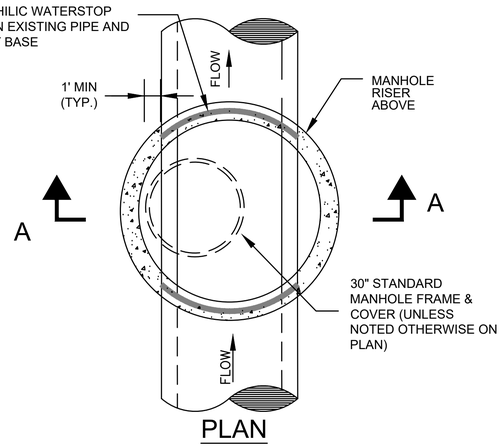

PLAN

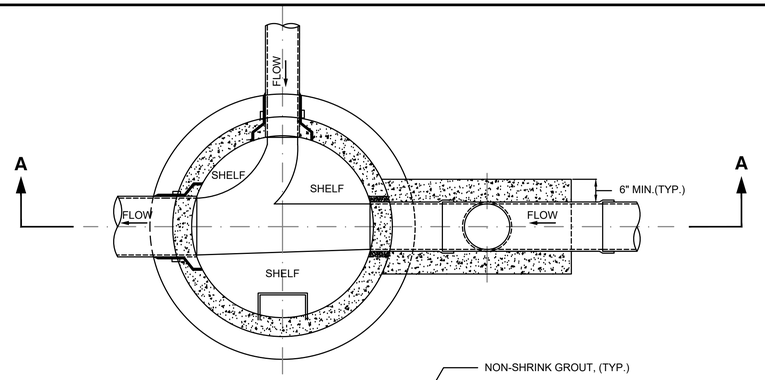

PLAN

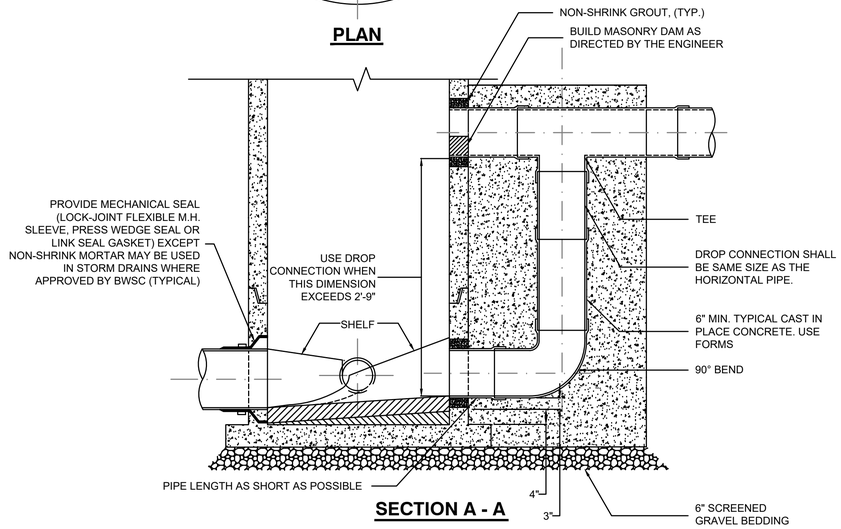

SECTION A - A

DROP MANHOLE DETAIL

NTS

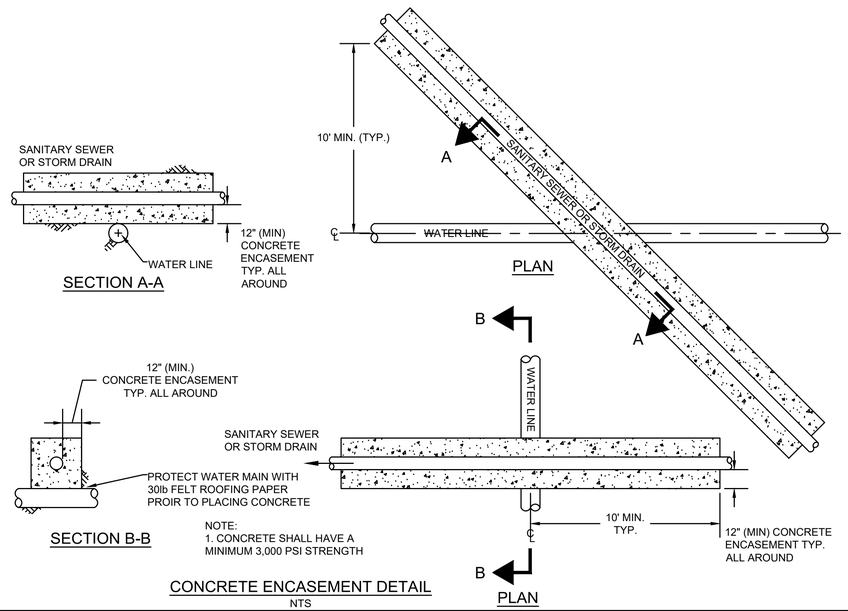

CONCRETE ENCASEMENT DETAIL

NTS

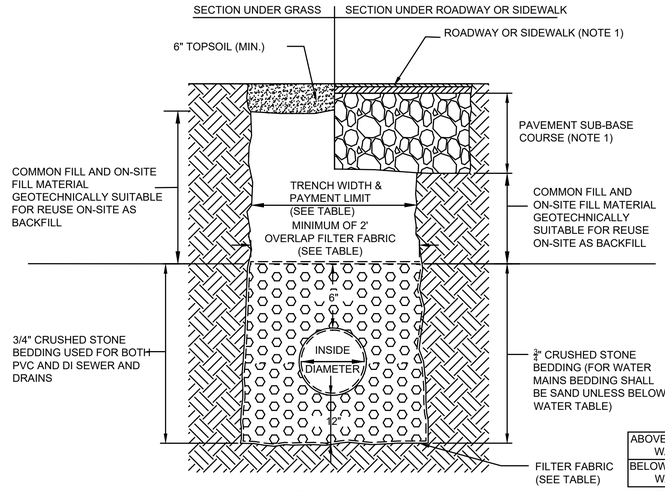

NOTES:
1. REFER TO APPROPRIATE DETAILS AND SPECIFICATIONS.
2. REFER TO "TRENCH PAY LIMIT TABLE FOR PIPES" FOR PAYMENT OF ALL ITEMS IN WHICH PAY TRENCH WIDTH IS A VARIABLE FOR CALCULATIONS OF QUANTITIES EXCEPT FOR TRENCH PAVEMENT
3. REFER TO TRENCH PAVEMENT DETAIL FOR PAVEMENT PAYMENT WIDTHS

TRENCH PAY LIMIT TABLE FOR PIPES

PIPE SIZE (DIA.)	MAX TRENCH WIDTH
LESS THAN 2"	2'-0"
2" TO 6"	3'-0"
8" TO 22"	4'-0"
24" & GREATER	I.D. + 2'-0"

I.D. = INSIDE DIMENSION

FOR TRENCHES GREATER THAT 5' DEEP ADD MAXIMUM 3' FOR TEMPORARY SUPPORT OF EXCAVATION

FILTER FABRIC USE

	SOIL TYPE	
	SILT OR CLAY	GRANULAR SOIL
ABOVE GROUND WATER	FILTER FABRIC NOT REQUIRED	FILTER FABRIC NOT REQUIRED
BELOW GROUND WATER	FILTER FABRIC REQUIRED	FILTER FABRIC NOT REQUIRED

TRENCH DETAIL FOR SEWER, DRAIN AND WATER PIPE

NTS

CONFORMED SET

HDR
HDR ENGINEERING, INC.
99 HIGH STREET, SUITE 2300
BOSTON, MASSACHUSETTS 02110-2378
(617) 357-7700

HUGH J. NEENAN CIVIL No. 34694 REGISTERED PROFESSIONAL ENGINEER COMMONWEALTH OF MASSACHUSETTS
Hugh J. Neenan
08-24-22

Scale			
Date			
Job No.			
Designed by			
Drawn by	0	CONFORMED SET	8/5/2022
Checked by	No.	Description	Date
Approved by	REVISIONS		

THE WORKS — CAMBRIDGE DEPARTMENT OF PUBLIC

Client	CITY OF CAMBRIDGE, MA
Project	RIVER STREET INFRASTRUCTURE AND STREETSCAPE PROJECT
Drawing	**SEWER AND WATER DETAILS - 4**
Sheet	CD-1.04
Total Sheets	381
File No.	

File: C:\PWWORKINGIEAST01\D0786396\7113XXX_(CIVIL DETAILS).DWG Plotted: 8/22/2022 6:07:19 PM

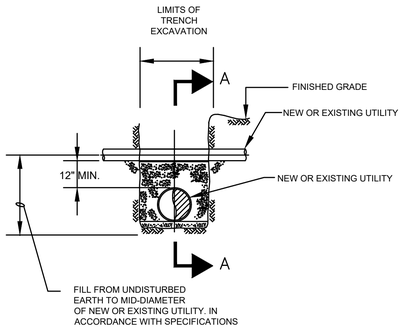

ELEVATION

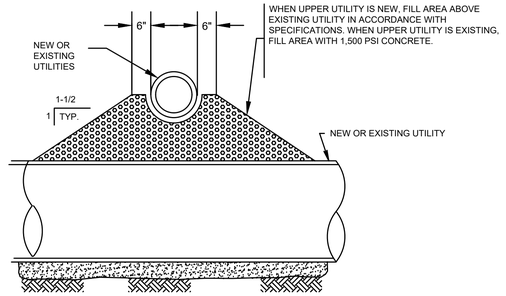

SECTION A-A

UTILITY CROSSING DETAIL
NTS

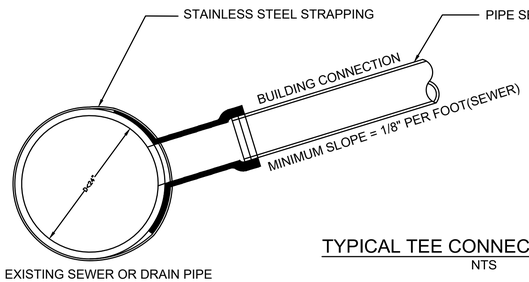

NOTES:
1. PIPE SHALL BE CORED TO CONFORM TO OPENING OF RUBBER SLEEVE ON TEE FITTING.
2. TEE MUST HAVE RUBBER SLEEVE AND SHALL BE TIGHTENED WITH STAINLESS STEEL BAND. TEE WILL NOT BE CEMENTED ONTO THE PIPE
3. CONNECTIONS DIRECTLY INTO THE EXISTING PIPE WITHOUT TEE FITTING ARE NOT ALLOWED

TYPICAL TEE CONNECTION DETAIL
NTS

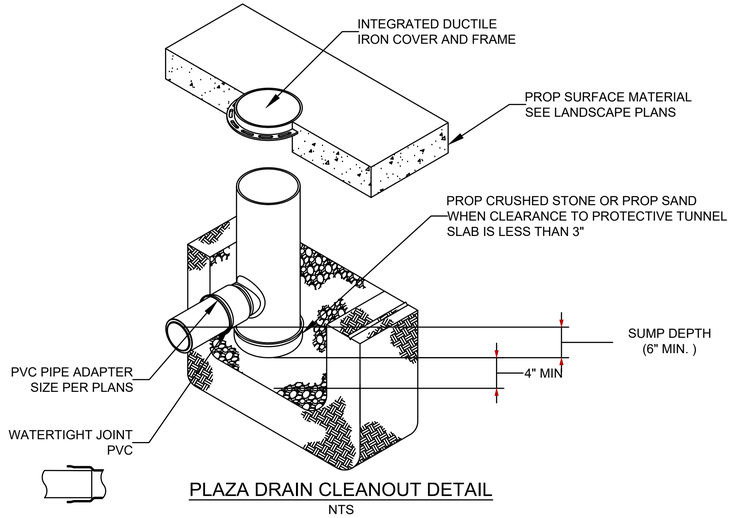

PLAZA DRAIN CLEANOUT DETAIL
NTS

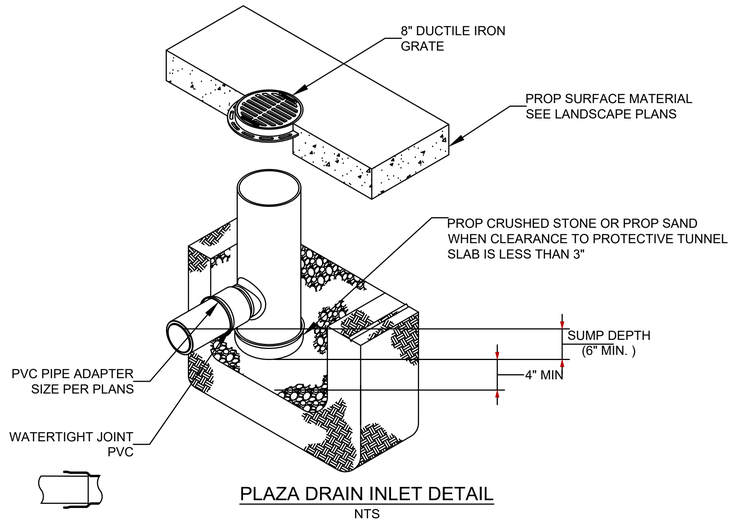

PLAZA DRAIN INLET DETAIL
NTS

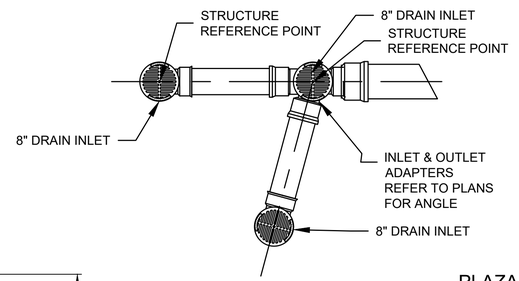

TO CHANGE ELEVATION

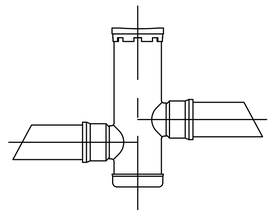

FOR SHALLOW APPLICATIONS

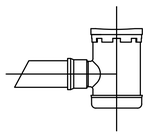

PLAZA TYPICAL DRAIN BASIN AND PLAZA INLINE DRAIN INSTALLATION DETAIL
NTS

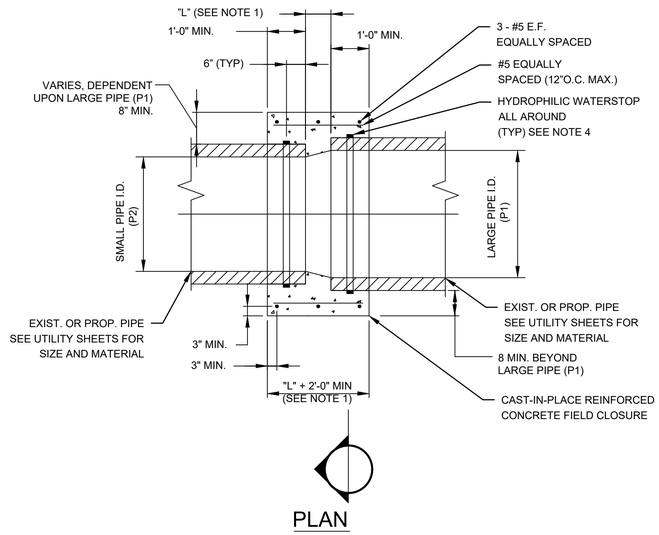

PLAN

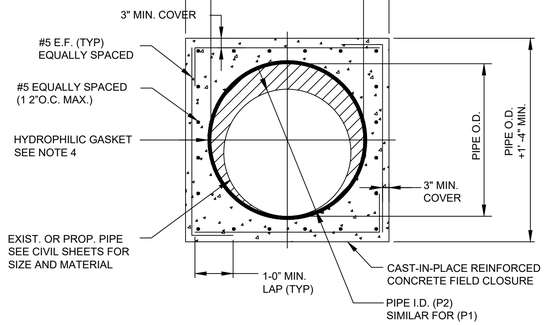

A SECTION
(P1=48" MAX.)

TYPE 1 PIPE FIELD CLOSURE NOTES:
1. SPACING BETWEEN PIPES (L) DEPENDS ON PIPE SIZES, FOR PIPES OF THE SAME SIZE USE 4". THE DISTANCE "L" EQUALS THE LARGE PIPE I.D. MINUS THE SMALL PIPE I.D. TIMES TWO [L=(P1-P2)x2].
2. PROPOSED PIPE INVERT SHALL MATCH EXISTING PIPE INVERT UNLESS OTHERWISE SHOWN ON CIVIL SHEETS.
3. CLEAN EXISTING PIPE PERIMETER BY PRESSURE WASH OR COMPRESSED AIR AND APPLY BONDING AGENT PRIOR TO CONCRETE ENCASEMENT.
4. INSTALL HYDROPHILIC WATERSTOP ALONG PIPE PERIMETER FOR EACH PIPE AS SPECIFIED IN SECTION 03300.
5. CONCRETE AND REBAR REQUIREMENTS SHALL CONFORM TO STANDARD STRUCTURAL DETAILS (DETAIL 8 THIS SHEET, AND DETAIL 27 ON SHEET GC-9) AND SPECIFICATIONS.
6. LOCATION OF FIELD CLOSURE SHALL BE SUBJECT TO THE ENGINEER'S APPROVAL.
7. MAINTAIN 2" COVER BETWEEN PIPE EXTERIOR AND ALL REINFORCING AND 3" MINIMUM FOR CONCRETE SURFACES SHOWN.
8. WHERE PIPE FIELD CLOSURES ARE PROPOSED IN PEAT AND PEAT IS NOT OVER EXCAVATED, PIPE FIELD CLOSURE EXCAVATION BACKFILL TO BE CDF.

PIPE FIELD CLOSURE (CAST-IN-PLACE) TYPE 1 DETAIL
(FOR NON-PRESSURE PIPES OF DIFFERENT MATERIALS OR SIZES)

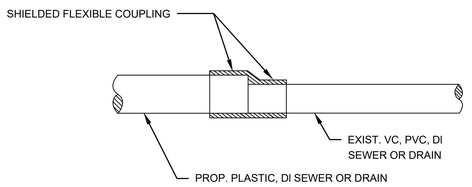

TYPE 2 PIPE FIELD CLOSURE NOTES:
1. FOR ALL GRAVITY MAINS AND LATERAL PIPES (SEWERS OR DRAINS). SEE SPECIFICATIONS FOR MATERIALS AND REQUIREMENTS

PIPE FIELD CLOSURE (SHIELDED FLEXIBLE COUPLING) TYPE 2 DETAIL

EXISTING PIPE MATERIAL						
NEW PIPE MATERIAL		BRICK	RCP	DI	VC	PLASTIC
	BRICK	1	1	1	1	1
	RCP	1	1	1	1	1
	DI	1	1	2	2	2
	VC	1	1	2	2	2
	PLASTIC	1	1	2	2	2

PIPE CONNECTION TABLE

TYPE 1 = PIPE FIELD CLOSURE (CAST-IN-PLACE)
TYPE 2 = SHIELDED FLEXIBLE COUPLING

PIPE CONNECTION NOTES:
1. PIPE COUPLERS SHALL BE INSTALLED PER THE TABLE ABOVE UNLESS OTHERWISE NOTED.

CONFORMED SET

HDR ENGINEERING, INC.
99 HIGH STREET, SUITE 2300
BOSTON, MASSACHUSETTS 02110-2378
(617) 357-7700

COMMONWEALTH OF MASSACHUSETTS
HUGH J. NEENAN
CIVIL
No. 34694
REGISTERED PROFESSIONAL ENGINEER
Hugh J. Neenan
08-24-22

Scale			
Date			
Job No.			
Designed by			
Drawn by	0	CONFORMED SET	8/5/2022
Checked by	No.	Description	Date
Approved by	REVISIONS		

THE WORKS — CAMBRIDGE DEPARTMENT OF PUBLIC WORKS

Client	CITY OF CAMBRIDGE, MA	Sheet	CD-1.05
Project	RIVER STREET INFRASTRUCTURE AND STREETSCAPE PROJECT	Total Sheets	381
Drawing	**SEWER AND WATER DETAILS - 5**	File No.	

File: C:\PW\WORKING\EAST01\D0786396\71113XXX_(CIVIL DETAILS).DWG Plotted: 8/22/2022 6:07:34 PM

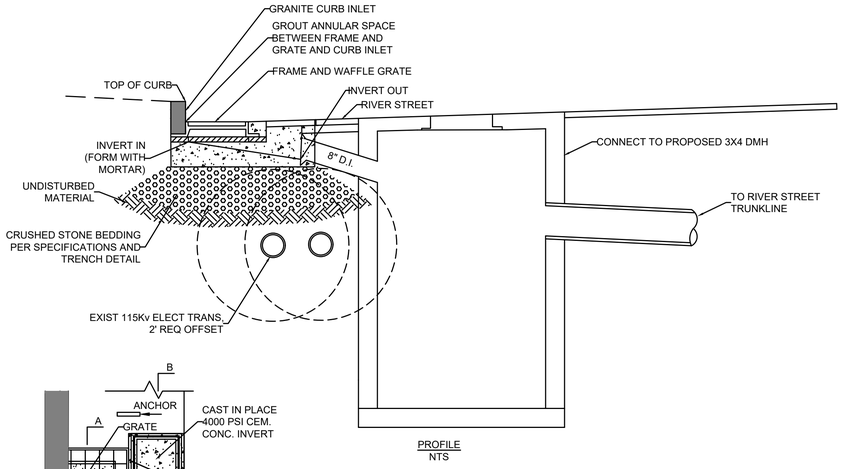

PROFILE
NTS

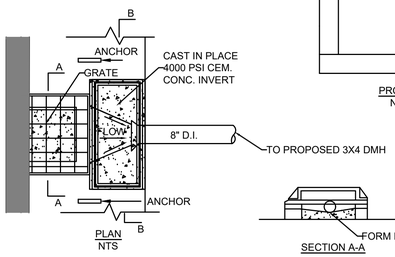

PLAN
NTS

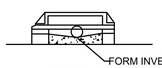

SECTION A-A

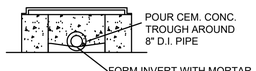

SECTION B-B

DRAIN INLET OVER SHALLOW UTILITIES
NTS

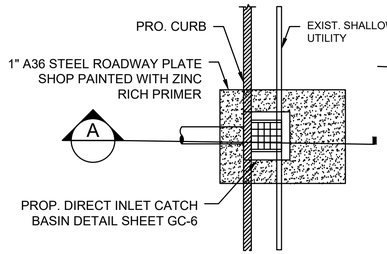

PLAN

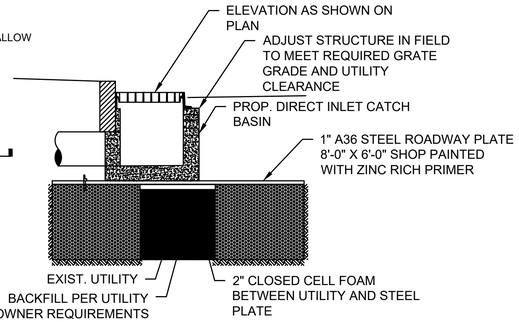

STEEL PLATE SUPORT OVER EXIST. SHALLOW UTILITY
NTS

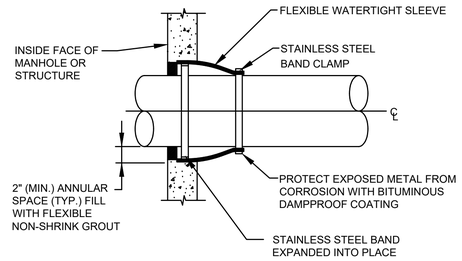

FLEXIBLE SLEEVE CONNECTION DETAIL
NTS

NOTE:
1. PRECAST OPENING OR CORE DRILLED INTO EXISTING STRUCTURE. SIZE VARIES TO ACCOMMODATE EXTENSION BONNET FLANGE DIAMETER OR PIPE.

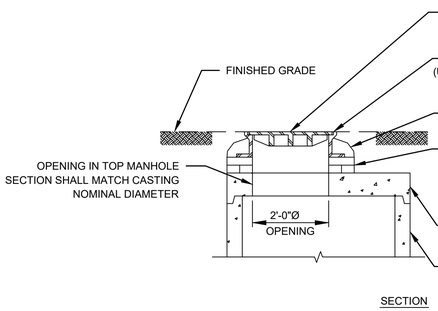

SECTION

TYPICAL FLAT TOP MANHOLE

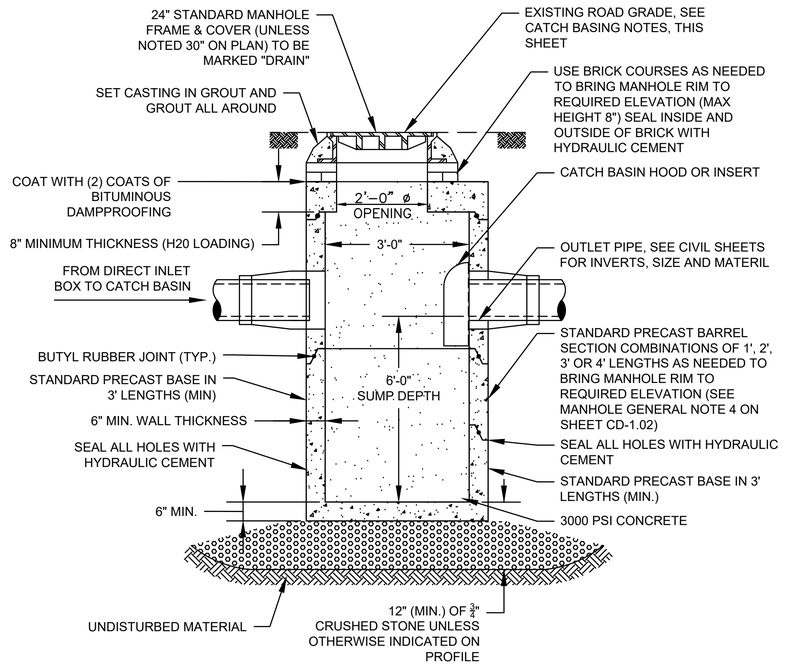

SECTION A-A

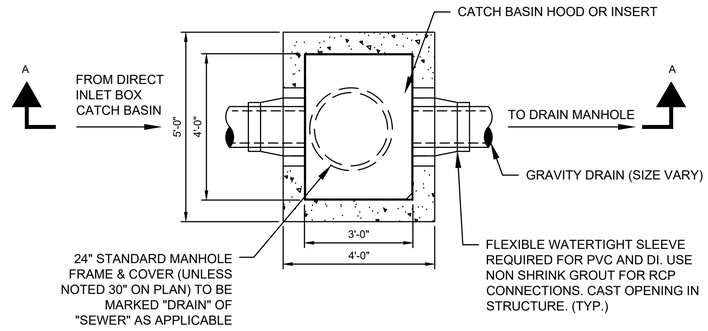

NOTES:

1. THE DESIGN PRECAST SECTIONS WITH FRAME AND COVER FOR AASHTO H20 LOADINGS.
2. FOR DESCRIPTION OF MATERIALS, SEE SPECIFICATIONS.

MANHOLE DETAIL - TYPE 7 3'X4' SUMP MANHOLE
NTS

CONFORMED SET

HDR ENGINEERING, INC.
99 HIGH STREET, SUITE 2300
BOSTON, MASSACHUSETTS 02110-2378
(617) 357-7700

COMMONWEALTH OF MASSACHUSETTS
HUGH J. NEENAN
CIVIL
No. 34694
REGISTERED PROFESSIONAL ENGINEER
Hugh J. Neenan
08-24-22

Scale			
Date			
Job No.			
Designed by			
Drawn by	0	CONFORMED SET	8/5/2022
Checked by	No.	Description	Date
Approved by	REVISIONS		

THE WORKS — CAMBRIDGE DEPARTMENT OF PUBLIC WORKS

Client	CITY OF CAMBRIDGE, MA	Sheet	CD-1.06
Project	RIVER STREET INFRASTRUCTURE AND STREETSCAPE PROJECT	Total Sheets	381
Drawing	**SEWER AND WATER DETAILS - 6**	File No.	

File: C:\PWWORKING\EAST01\D07863961713XXX_(CIVIL DETAILS).DWG Plotted: 8/22/2022 6:07:44 PM

DRAINAGE STRUCTURE TABLE					
ID	ALIGNMENT	STATION	RIM ELEV.	SUMP	INV. ELEV. OUT
3X4 DSMH-130	BASELINE - RIVER STREET	32+64.12 (82.9 R)	29.73	6.0'	
3X4 DSMH-131	BASELINE - RIVER STREET	32+81.51 (107.8 R)	29.80	6.0'	I=25.92' (D16DMH1068)
3X4 DSMH-140	BASELINE - RIVER STREET	45+98.42 (322.3 R)	23.96	3.0'	I=21.12' (D10DMH3360)
CB-1	BASELINE - RIVER STREET	18+50.14 (9.5 L)	20.58	0.0'	
CB-2	BASELINE - RIVER STREET	19+88.45 (16.5 L)	19.41	6.0'	I=16.34' (DMH-12)
CB-3	BASELINE - RIVER STREET	21+50.81 (10.5 L)	19.19	6.0'	I=16.11' (DMH-14)
CB-4	BASELINE - RIVER STREET	42+46.09 (11.7 L)	27.06	6.0'	I=22.87' (DMH-39)
CB-5	BASELINE - RIVER STREET	42+97.49 (20.7 L)	26.19	6.0'	I=23.22' (DMH-40)
CB-6	BASELINE - RIVER STREET	43+73.81 (20.9 L)	26.70	6.0'	I=23.42' (DMH-41)
CB-7	BASELINE - RIVER STREET	43+90.25 (15.8 R)	27.12	6.0'	I=25.00' (DMH-41)
CB-8	BASELINE - RIVER STREET	44+74.96 (26.2 L)	26.43	6.0'	I=23.82' (DMH-42)
CB-9	BASELINE - RIVER STREET	45+07.72 (20.4 R)	27.21	6.0'	I=23.81' (DMH-43)
CB-10	BASELINE - RIVER STREET	45+64.61 (21.9 L)	26.75	6.0'	I=23.48' (DMH-42)
CB-11	BASELINE - RIVER STREET	45+90.04 (26.5 R)	27.21	6.0'	I=23.35' (DMH-43)
CB-12	BASELINE - RIVER STREET	46+57.13 (19.9 R)	27.29	6.0'	I=23.57' (DMH-44)
CB-13	BASELINE - RIVER STREET	46+79.49 (26.4 L)	26.64	6.0'	I=24.48' (D10DMH3240)
CB-130	BASELINE - RIVER STREET	46+22.68 (493.8 R)	22.15	6.0'	I=20.63' ()
CB-130	BASELINE - RIVER STREET	34+32 (40.0 R)	28.47	6.0'	I=24.96' (DMH-30)
DI-1	BASELINE - RIVER STREET	12+37.92 (9.5 L)	18.84	0.0'	I=16.26' (DSMH-1)
DI-2	BASELINE - RIVER STREET	13+33.57 (9.5 L)	19.22	0.0'	I=16.22' (3X4 DSMH-1)
DI-3	BASELINE - RIVER STREET	14+11.94 (9.5 L)	19.38	0.0'	I=16.38' (DSMH-2)
DI-4	BASELINE - RIVER STREET	14+93.91 (9.5 L)	19.53	0.0'	I=16.53' (DSMH-4)
DI-5	BASELINE - RIVER STREET	15+87.19 (9.6 L)	19.62	0.0'	I=16.87' (DSMH-5)
DI-6	BASELINE - RIVER STREET	17+80.15 (9.6 L)	20.52	0.0'	I=17.96' (DSMH-6)
DI-7	BASELINE - RIVER STREET	19+35.32 (10.5 L)	19.92	0.0'	I=16.30' (3X4 DSMH-3)
DI-8	BASELINE - RIVER STREET	20+94.95 (16.5 L)	19.20	0.0'	I=16.06' (D16DMH1930)
DI-9	BASELINE - RIVER STREET	22+53.64 (16.5 L)	20.71	0.0'	I=18.13' (3X4 DSMH-4)
DI-10	BASELINE - RIVER STREET	23+45.46 (16.5 L)	20.79	0.0'	I=18.27' (3X4 DSMH-5)
DI-11	BASELINE - RIVER STREET	24+22.87 (16.5 L)	22.28	0.0'	I=19.20' (3X4 DSMH-7)
DI-12	BASELINE - RIVER STREET	25+14.31 (16.3 L)	24.17	0.0'	I=21.09' (3X4 DSMH-6)
DI-13	BASELINE - RIVER STREET	26+37.89 (10.0 L)	26.54	0.0'	I=23.44' (DSMH-9)
DI-14	BASELINE - RIVER STREET	27+47.60 (10.5 L)	27.51	0.0'	I=24.70' (DSMH-10)
DI-15	BASELINE - RIVER STREET	28+14.52 (10.5 L)	28.32	0.0'	I=25.19' (D16DMH7707)
DI-16	BASELINE - RIVER STREET	29+26.17 (12.8 L)	28.70	0.0'	I=25.64' (D16DMH7710)
DI-17	BASELINE - RIVER STREET	30+06.71 (11.5 L)	29.23	0.0'	I=26.18' (3X4 DSMH-8)
DI-18	BASELINE - RIVER STREET	31+04.43 (16.4 L)	29.95	0.0'	I=26.39' (3X4 DSMH-9)
DI-19	BASELINE - RIVER STREET	31+83.88 (16.5 L)	29.35	0.0'	I=26.27' (3X4 DSMH-10)
DI-20	BASELINE - RIVER STREET	32+64.02 (10.5 L)	29.14	0.0'	I=26.01' (D16DMH7825)
DI-21	BASELINE - RIVER STREET	33+57.48 (16.5 L)	28.65	0.0'	I=25.56' (3X4 DSMH-11)
DI-22	BASELINE - RIVER STREET	34+34.85 (16.5 L)	28.12	0.0'	I=25.05' (DSMH-12)
DI-23	BASELINE - RIVER STREET	34+77.44 (16.2 L)	27.90	0.0'	I=24.82' (DSMH-12)
DI-24	BASELINE - RIVER STREET	35+88.18 (10.5 L)	27.47	0.0'	I=24.38' (DSMH-13)

DRAINAGE STRUCTURE TABLE					
ID	ALIGNMENT	STATION	RIM ELEV.	SUMP	INV. ELEV. OUT
DI-25	BASELINE - RIVER STREET	36+69.38 (16.5 L)	27.16	0.0'	I=24.12' (DSMH-14)
DI-26	BASELINE - RIVER STREET	37+43.62 (16.5 L)	26.88	0.0'	I=23.80' (DSMH-15)
DI-27	BASELINE - RIVER STREET	38+39.77 (16.6 L)	26.50	0.0'	I=23.30' (DSMH-17)
DI-28	BASELINE - RIVER STREET	40+06.34 (16.5 L)	26.14	0.0'	I=23.06' (DSMH-16)
DI-29	BASELINE - RIVER STREET	40+85.84 (10.5 L)	25.85	0.0'	I=22.77' (3X4 DSMH-12)
DI-100	BASELINE - RIVER STREET	22+48.22 (41.4 R)	20.76	6.0'	I=18.24' (DSMH-100)
DI-101	BASELINE - RIVER STREET	22+70.55 (48.2 R)	21.01	6.0'	I=18.22' (DSMH-100)
DI-110	BASELINE - RIVER STREET	21+65.77 (32.7 L)	19.63	0.0'	I=16.60' (DI-111)
DI-111	BASELINE - RIVER STREET	21+88.25 (32.4 L)	19.75	0.0'	I=16.38' (DSMH-18)
DI-120	BASELINE - RIVER STREET	32+83.67 (41.0 L)	27.46	0.0'	I=24.93' (DSMH-120)
DI-121	BASELINE - RIVER STREET	33+06.31 (33.8 L)	27.23	0.0'	I=24.71' (DSMH-120)
DI-130	BASELINE - RIVER STREET	32+48.54 (95.6 R)	29.23	0.0'	I=26.20' (3X4 DSMH-130)
DI-131	BASELINE - RIVER STREET	32+64.51 (116.4 R)	29.20	0.0'	I=26.20' (3X4 DSMH-131)
DI-132	BASELINE - RIVER STREET	32+96.14 (131.5 R)	29.26	0.0'	I=26.20' (3X4 DSMH-131)
DI-133	BASELINE - RIVER STREET	33+09.64 (118.2 R)	29.44	6.0'	I=26.40' (DSMH-130)
DI-140	BASELINE - RIVER STREET	45+95.42 (322.5 R)	23.82	0.0'	I=21.30' (3X4 DSMH-140)
DI-141	BASELINE - RIVER STREET	46+04.69 (315.1 R)	23.84	0.0'	I=21.30' (3X4 DSMH-140)
PDI-01	BASELINE - RIVER STREET	32+93.47 (41.0 R)	29.59	0.0'	I=24.23' (PDI-02)
PDI-02	BASELINE - RIVER STREET	33+04.75 (41.0 R)	30.83	0.0'	I=24.11' (PDI-03)
PDI-03	BASELINE - RIVER STREET	33+35.60 (39.6 R)	31.09	0.0'	I=23.80' (PDI-04)
PDI-04	BASELINE - RIVER STREET	33+51 (39.6 R)	30.40	0.0'	I=23.07' (DSMH-11)
PDI-05	BASELINE - RIVER STREET	33+39.20 (28.5 R)	29.48	0.0'	I=23.81' (PDI-04)
PDI-06	BASELINE - RIVER STREET	45+55.67 (76.9 R)	27.56	0.0'	I=20.38' (DS-800)
PDI-07	BASELINE - RIVER STREET	45+61.19 (65.5 R)	27.96	0.0'	I=20.51' (PDI-06) I=20.51' (PDI-08)
PDI-09	BASELINE - RIVER STREET	45+67.85 (66.2 R)	27.85	0.0'	I=20.61' (PDI-07)
PDI-10	BASELINE - RIVER STREET	45+76.43 (45.2 R)	27.80	0.0'	I=20.86' (PDI-09)
PDI-11	BASELINE - RIVER STREET	45+98.32 (37.1 R)	27.43	0.0'	I=21.14' (PDI-10)
PDI-12	BASELINE - RIVER STREET	46+17.09 (29.6 R)	27.30	0.0'	I=22.37' (PDI-12) I=22.37' (PDI-12) I=21.37' (PDI-11)
PDI-13	BASELINE - RIVER STREET	46+35.54 (58.2 R)	27.70	0.0'	I=21.99' (PDI-14)
PDI-14	BASELINE - RIVER STREET	46+41.94 (64.0 R)	27.75	0.0'	I=21.89' (PDI-17)
PDI-15	BASELINE - RIVER STREET	46+37.50 (51.8 R)	27.59	0.0'	I=22.00' (PDI-16)
PDI-16	BASELINE - RIVER STREET	46+43.54 (51.8 R)	27.55	0.0'	I=21.93' (PDI-17)
PDI-17	BASELINE - RIVER STREET	46+47.83 (61.1 R)	27.65	0.0'	I=21.83' (PDI-18)
PDI-18	BASELINE - RIVER STREET	46+60.55 (64.2 R)	27.82	0.0'	I=21.69' (PDI-19)
PDI-19	BASELINE - RIVER STREET	47+06.27 (56.2 R)	27.41	0.0'	I=21.23' (PDI-20)
PDI-20	BASELINE - RIVER STREET	47+11.38 (87.9 R)	27.81	0.0'	I=20.94' (D10DMH3225)
PDI-21	BASELINE - RIVER STREET	46+89.21 (88.6 R)	28.30	0.0'	I=21.15' (PDI-22) I=21.15' (PDI-20)
PDI-22	BASELINE - RIVER STREET	46+92.56 (78.2 R)	28.02	0.0'	

DRAINAGE STRUCTURE TABLE					
ID	ALIGNMENT	STATION	RIM ELEV.	SUMP	INV. ELEV. OUT
CB-101	BASELINE - BLACKSTONE STREET	60+37.24 (10.3 L)	20.19	4.0'	I=17.34' (DMH-101)
CB-102	BASELINE - BLACKSTONE STREET	68+36.29 (15.8 L)	23.66	6.0'	I=20.60' (DMH-110)
CB-103	BASELINE - BLACKSTONE STREET	68+36.76 (15.7 R)	23.59	6.0'	I=20.81' (DMH-110)
DI-101	BASELINE - BLACKSTONE STREET	60+42.37 (17.4 R)	20.66	0.0'	I=17.40' (DSMH-101)
DI-102	BASELINE - BLACKSTONE STREET	61+17.79 (18.7 L)	19.75	0.0'	I=16.24' (DSMH-102)
DI-103	BASELINE - BLACKSTONE STREET	61+39.59 (13.5 R)	19.76	0.0'	I=16.23' (DSMH-102)
DI-104	BASELINE - BLACKSTONE STREET	62+72.53 (15.2 R)	20.91	0.0'	I=17.45' (DSMH-103)
DI-105	BASELINE - BLACKSTONE STREET	62+64.18 (16.0 L)	20.60	0.0'	I=17.48' (3X4 DSMH-100)
DI-106	BASELINE - BLACKSTONE STREET	63+44.85 (15.3 R)	21.58	0.0'	I=18.55' (DSMH-104)
DI-107	BASELINE - BLACKSTONE STREET	63+44.82 (15.2 L)	21.44	0.0'	I=18.40' (DSMH-104)
DI-108	BASELINE - BLACKSTONE STREET	63+85.17 (15.5 L)	22.00	0.0'	I=17.97' (DSMH-105)
DI-109	BASELINE - BLACKSTONE STREET	64+52.92 (15.5 L)	22.48	0.0'	I=19.96' (DSMH-106)

File: C:\PWWORKING\EAST01\DD786396\7113XXX_(CIVIL DETAILS).DWG Plotted: 4/15/2022 2:33:57 PM

ISSUED FOR BID

HDR ENGINEERING, INC.
99 HIGH STREET, SUITE 2300
BOSTON, MASSACHUSETTS 02110–2378
(617) 357–7700

COMMONWEALTH OF MASSACHUSETTS
PHILIP FUSCO
CIVIL
No. 45868
REGISTERED PROFESSIONAL ENGINEER

Scale			
Date			
Job No.			
Designed by			
Drawn by			
Checked by	No.	Description	Date
Approved by	REVISIONS		

CAMBRIDGE DEPARTMENT OF PUBLIC WORKS

Client	CITY OF CAMBRIDGE, MA	Sheet	CD-1.07
Project	RIVER STREET INFRASTRUCTURE AND STREETSCAPE PROJECT	Total Sheets	381
Drawing	**CATCH BASIN SCHEDULE**	File No.	

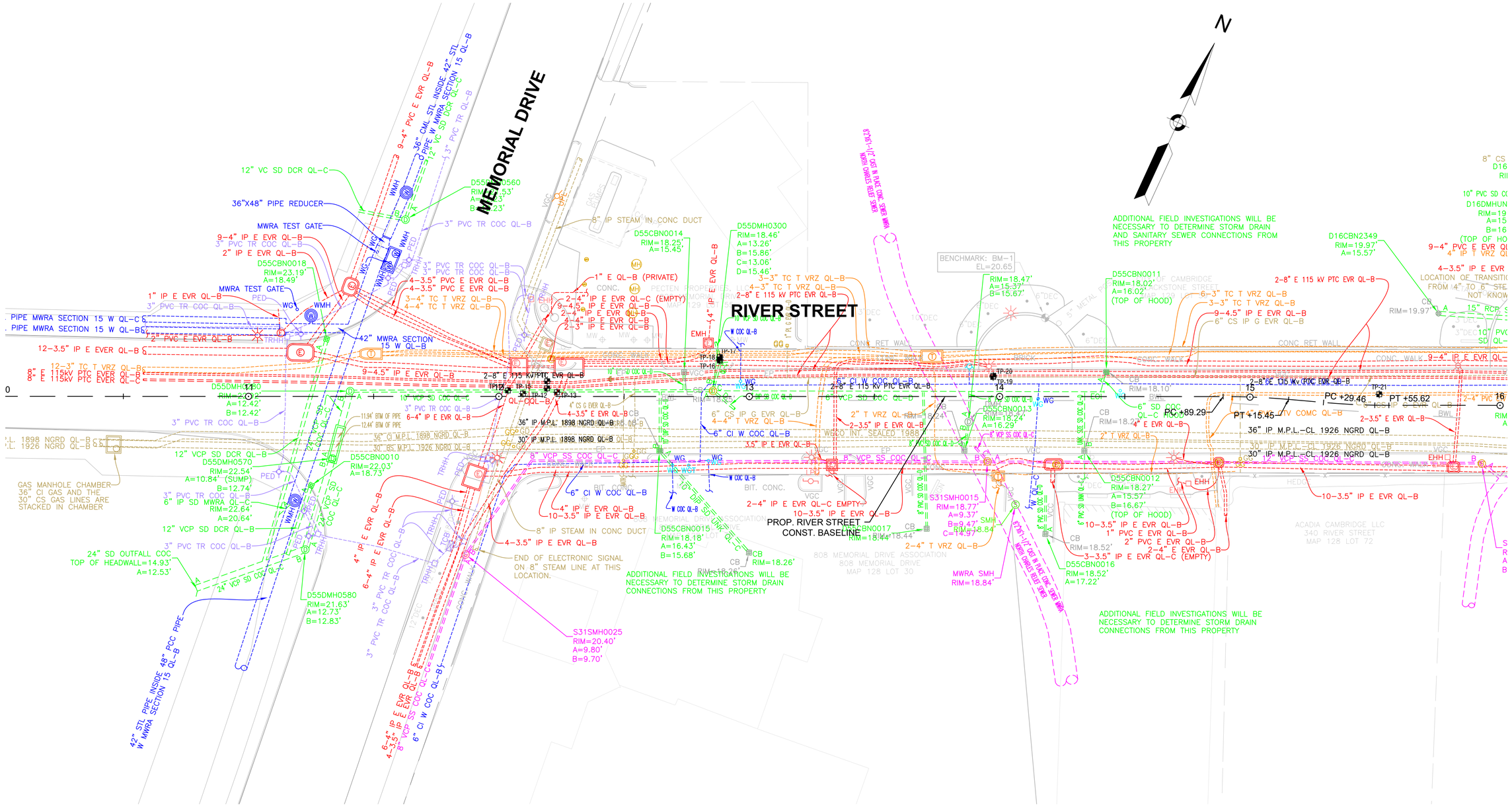

PLAN

0 20 50 100

SCALE: 1" = 20'

ISSUED FOR BID

HDR ENGINEERING, INC.
99 HIGH STREET, SUITE 2300
BOSTON, MASSACHUSETTS 02110-2378
(617) 357-7700

BSI ENGINEERING
CIVIL & SUBSURFACE UTILITY ENGINEERING
100 Hallet St
Boston, MA 02124
T: (617) 265 4200
F: (617) 209 1297
www.bsieng.com

FELDMAN LAND SURVEYORS
FELDMAN LAND SURVEYORS
152 HAMPDEN STREET
BOSTON, MASS. 02119
PHONE: (617)357-9740
www.feldmansurveyors.com

COMMONWEALTH OF MASSACHUSETTS
PHILIP FUSCO
CIVIL
No. 45868
REGISTERED PROFESSIONAL ENGINEER

Scale			
Date			
Job No.			
Designed by			
Drawn by			
Checked by	No.	Description	Date
Approved by	REVISIONS		

CAMBRIDGE DEPARTMENT OF PUBLIC WORKS

Client	CITY OF CAMBRIDGE, MA
Project	RIVER STREET INFRASTRUCTURE AND STREETSCAPE PROJECT
Drawing	**EXISTING CONDITIONS - 1**
Sheet	EX-1.01
Total Sheets	381
File No.	

File: C:\PWWORKING\EAST01\D0786396\7113XXX_(EXISTING CONDITIONS).DWG Plotted: 4/15/2022 2:36:15 PM

SEE SHEET EX-1.08

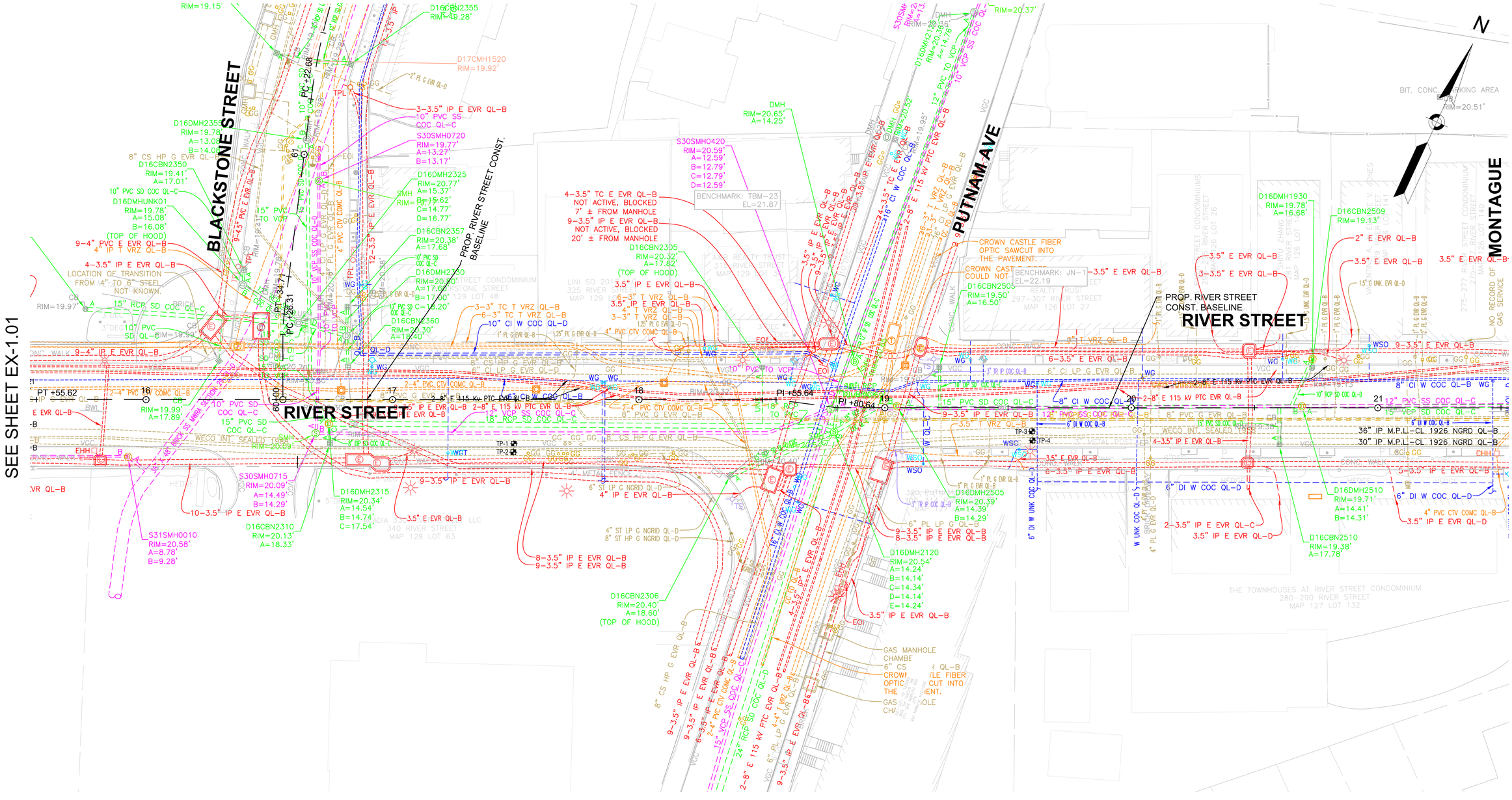

SEE SHEET EX-1.01

SEE SHEET EX-1.03

PLAN

0 20 50 100

SCALE: 1" = 20'

ISSUED FOR BID

HDR ENGINEERING, INC.
99 HIGH STREET, SUITE 2300
BOSTON, MASSACHUSETTS 02110-2378
(617) 357-7700

BSI ENGINEERING
CIVIL & SUBSURFACE UTILITY ENGINEERING
100 Hallet St
Boston, MA 02124
T: (617) 265 4200
F: (617) 209 1297
www.bsieng.com

FELDMAN LAND SURVEYORS
FELDMAN LAND SURVEYORS
162 HAMPDEN STREET
BOSTON, MASS. 02119
PHONE: (617)357-9740
www.feldmansurveyors.com

COMMONWEALTH OF MASSACHUSETTS
PHILIP FUSCO
CIVIL
No. 45868
REGISTERED PROFESSIONAL ENGINEER

Scale			
Date			
Job No.			
Designed by			
Drawn by			
Checked by	No.	Description	Date
Approved by	REVISIONS		

THE WORKS — CAMBRIDGE DEPARTMENT OF PUBLIC WORKS

Client	CITY OF CAMBRIDGE, MA
Project	RIVER STREET INFRASTRUCTURE AND STREETSCAPE PROJECT
Drawing	**EXISTING CONDITIONS - 2**
Sheet	EX-1.02
Total Sheets	381
File No.	

File: C:\PWWORKING\EAST01\D07863961713XXX_(EXISTING CONDITIONS).DWG Plotted: 4/15/2022 2:36:28 PM

SEE SHEET EX-1.02

SEE SHEET EX-1.04

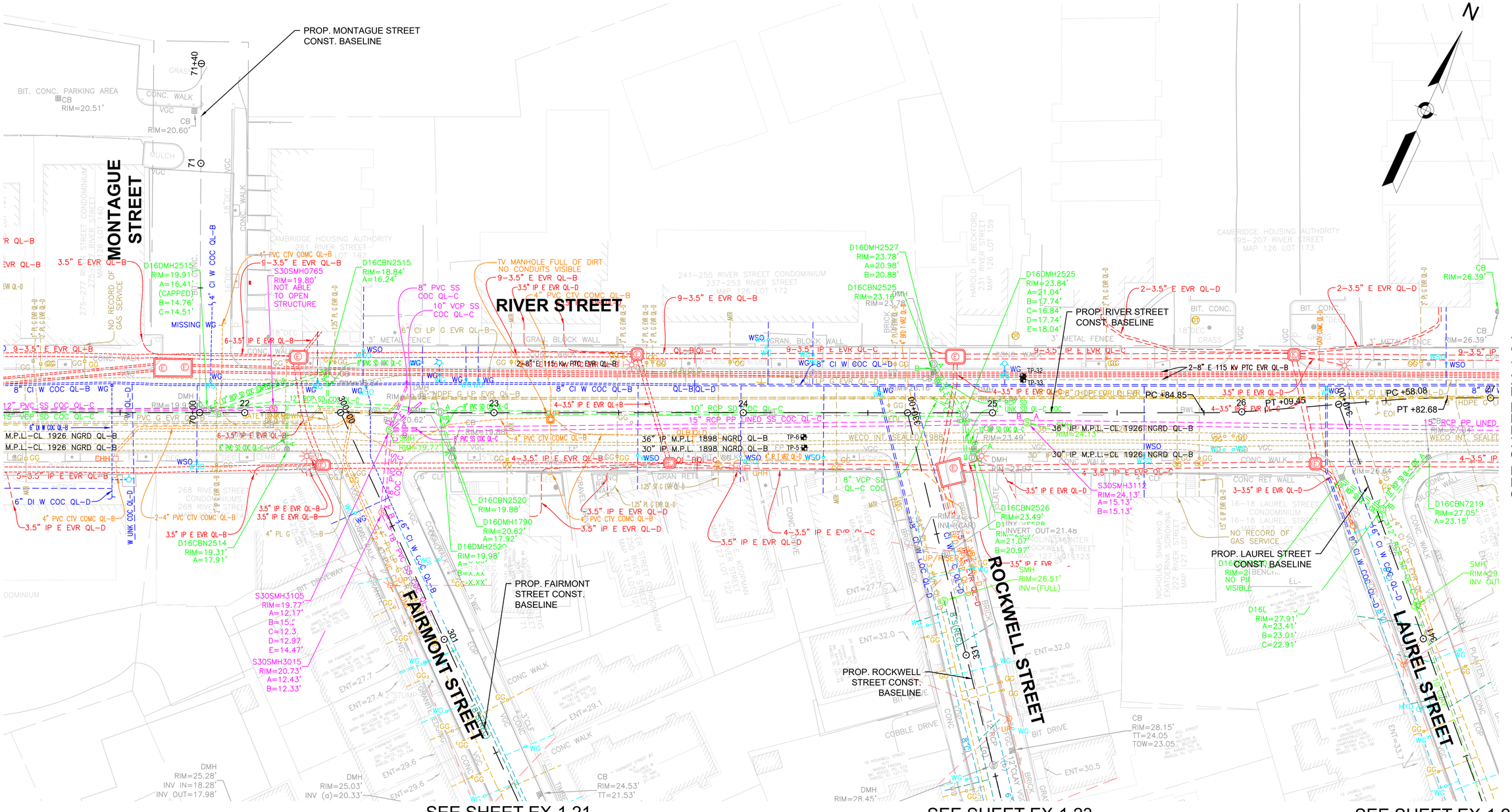

PLAN

0 20 50 100

SCALE: 1" = 20'

ISSUED FOR BID

HDR ENGINEERING, INC.
99 HIGH STREET, SUITE 2300
BOSTON, MASSACHUSETTS 02110–2378
(617) 357–7700

BSI ENGINEERING
CIVIL & SUBSURFACE UTILITY ENGINEERING
100 Hallet St
Boston, MA 02124
T: (617) 265 4200
F: (617) 209 1297
www.bsieng.com

FELDMAN LAND SURVEYORS
FELDMAN LAND SURVEYORS
162 HAMPDEN STREET
BOSTON, MASS. 02119
PHONE: (617)357-9740
www.feldmansurveyors.com

COMMONWEALTH OF MASSACHUSETTS
PHILIP FUSCO
CIVIL
No. 45868
REGISTERED PROFESSIONAL ENGINEER

Scale			
Date			
Job No.			
Designed by			
Drawn by			
Checked by	No.	Description	Date
Approved by	REVISIONS		

THE CAMBRIDGE DEPARTMENT OF PUBLIC WORKS

Client: CITY OF CAMBRIDGE, MA	Sheet: EX-1.03
Project: RIVER STREET INFRASTRUCTURE AND STREETSCAPE PROJECT	Total Sheets: 381
Drawing: **EXISTING CONDITIONS - 3**	File No.

File: C:\PWWORKING\EAST01\D07863961713XXX_(EXISTING CONDITIONS).DWG Plotted: 4/15/2022 2:36:38 PM

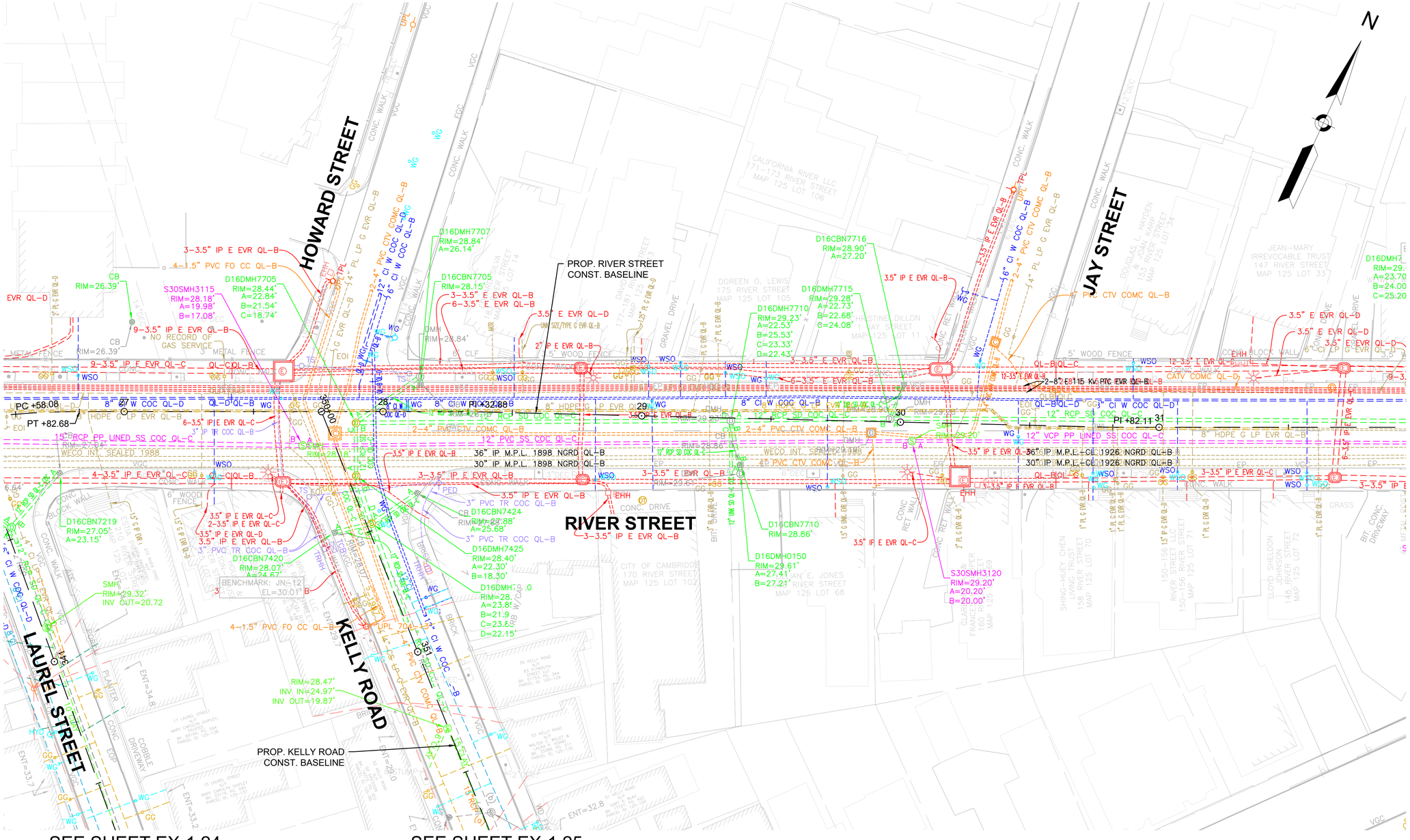

PLAN

0 20 50 100

SCALE: 1" = 20'

ISSUED FOR BID

HDR ENGINEERING, INC.
99 HIGH STREET, SUITE 2300
BOSTON, MASSACHUSETTS 02110-2378
(617) 357-7700

BSI ENGINEERING
CIVIL & SUBSURFACE UTILITY ENGINEERING
100 Hallet St
Boston, MA 02124
T: (617) 265 4200
F: (617) 209 1297
www.bsieng.com

FELDMAN LAND SURVEYORS
FELDMAN LAND SURVEYORS
152 HAMPDEN STREET
BOSTON, MASS. 02119
PHONE: (617)357-9740
www.feldmansurveyors.com

COMMONWEALTH OF MASSACHUSETTS
PHILIP FUSCO
CIVIL
No. 45868
REGISTERED PROFESSIONAL ENGINEER

Scale			
Date			
Job No.			
Designed by			
Drawn by			
Checked by	No.	Description	Date
Approved by	REVISIONS		

THE WORKS — CAMBRIDGE DEPARTMENT OF PUBLIC WORKS

Client	CITY OF CAMBRIDGE, MA
Project	RIVER STREET INFRASTRUCTURE AND STREETSCAPE PROJECT
Drawing	**EXISTING CONDITIONS - 4**
Sheet	EX-1.04
Total Sheets	381
File No.	

File: C:\PW\WORKING\EAST01\D07863961713XXX_(EXISTING CONDITIONS).DWG Plotted: 4/15/2022 2:36:48 PM

SEE SHEET EX-1.04

SEE SHEET EX-1.06

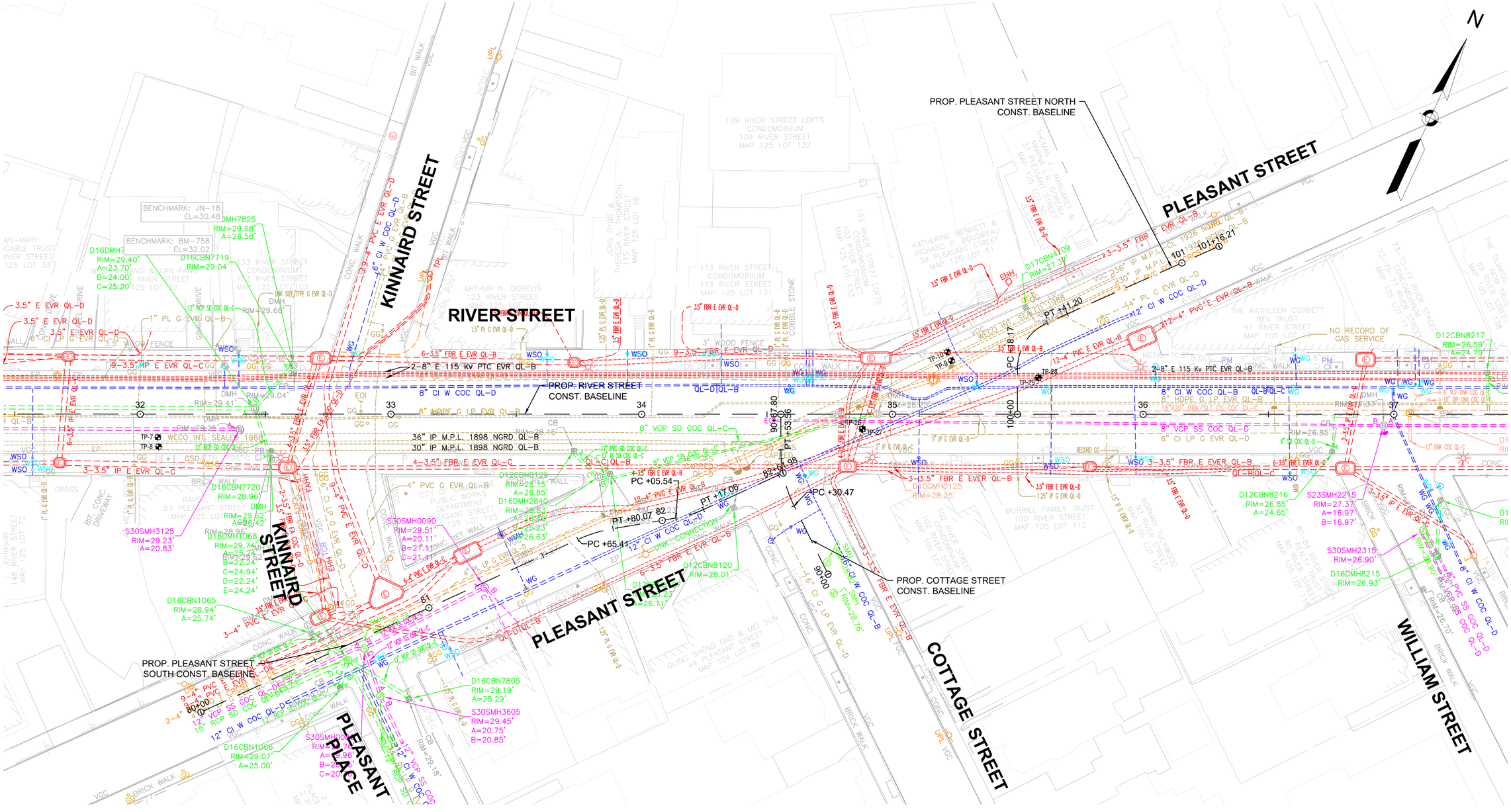

PLAN

SCALE: 1" = 20'

ISSUED FOR BID

HDR ENGINEERING, INC.
99 HIGH STREET, SUITE 2300
BOSTON, MASSACHUSETTS 02110-2378
(617) 357-7700

BSI ENGINEERING
CIVIL & SUBSURFACE UTILITY ENGINEERING
100 Hallet St
Boston, MA 02124
T: (617) 265 4200
F: (617) 209 1297
www.bsieng.com

FELDMAN LAND SURVEYORS
FELDMAN LAND SURVEYORS
152 HAMPDEN STREET
BOSTON, MASS. 02119
PHONE: (617)357-9740
www.feldmansurveyors.com

COMMONWEALTH OF MASSACHUSETTS
PHILIP FUSCO
CIVIL
No. 45868
REGISTERED PROFESSIONAL ENGINEER

Scale			
Date			
Job No.			
Designed by			
Drawn by			
Checked by	No.	Description	Date
Approved by	REVISIONS		

THE WORKS — CAMBRIDGE DEPARTMENT OF PUBLIC WORKS

Client	CITY OF CAMBRIDGE, MA
Project	RIVER STREET INFRASTRUCTURE AND STREETSCAPE PROJECT
Drawing	**EXISTING CONDITIONS - 5**
Sheet	EX-1.05
Total Sheets	381
File No.	

File: C:\PW\WORKING\EAST01\D07863961713XXX_(EXISTING CONDITIONS).DWG Plotted: 4/15/2022 2:36:58 PM

SEE SHEET EX-1.05

SEE SHEET EX-1.07

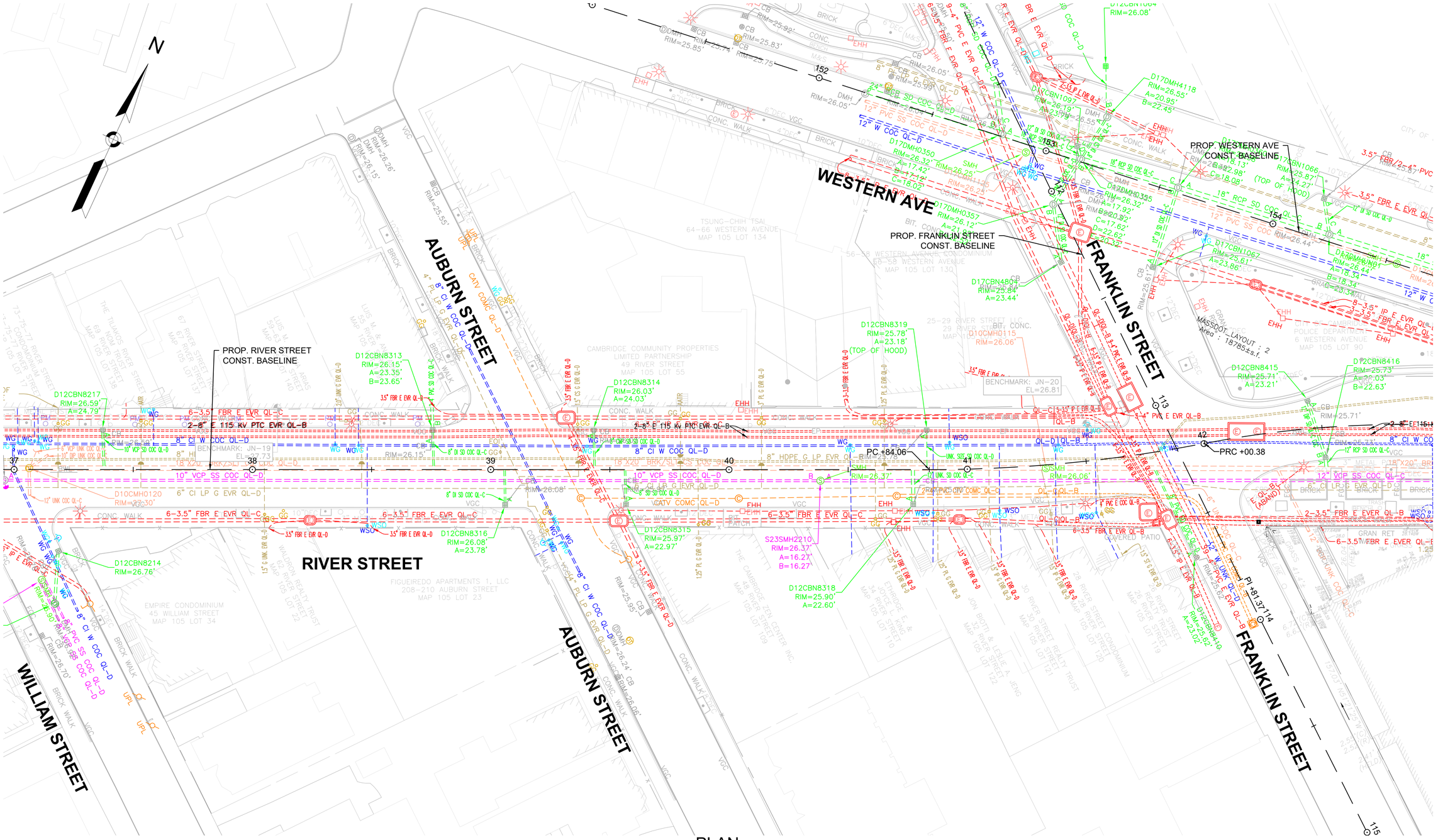

ISSUED FOR BID

HDR ENGINEERING, INC.
99 HIGH STREET, SUITE 2300
BOSTON, MASSACHUSETTS 02110-2378
(617) 357-7700

BSI ENGINEERING
CIVIL & SUBSURFACE UTILITY ENGINEERING
100 Hallet St
Boston, MA 02124
T: (617) 265 4200
F: (617) 209 1297
www.bsieng.com

FELDMAN LAND SURVEYORS
FELDMAN LAND SURVEYORS
152 HAMPDEN STREET
BOSTON, MASS. 02119
PHONE: (617)357-9740
www.feldmansurveyors.com

COMMONWEALTH OF MASSACHUSETTS
PHILIP FUSCO
CIVIL
No. 45868
REGISTERED PROFESSIONAL ENGINEER

Scale			
Date			
Job No.			
Designed by			
Drawn by			
Checked by	No.	Description	Date
Approved by	REVISIONS		

THE WORKS — CAMBRIDGE DEPARTMENT OF PUBLIC WORKS

Client: CITY OF CAMBRIDGE, MA	Sheet: EX-1.06
Project: RIVER STREET INFRASTRUCTURE AND STREETSCAPE PROJECT	Total Sheets: 381
Drawing: **EXISTING CONDITIONS - 6**	File No.

File: C:\PWWORKING\EAST01\D07863961713XXX_(EXISTING CONDITIONS).DWG Plotted: 4/15/2022 2:37:08 PM

SEE SHEET EX-1.06

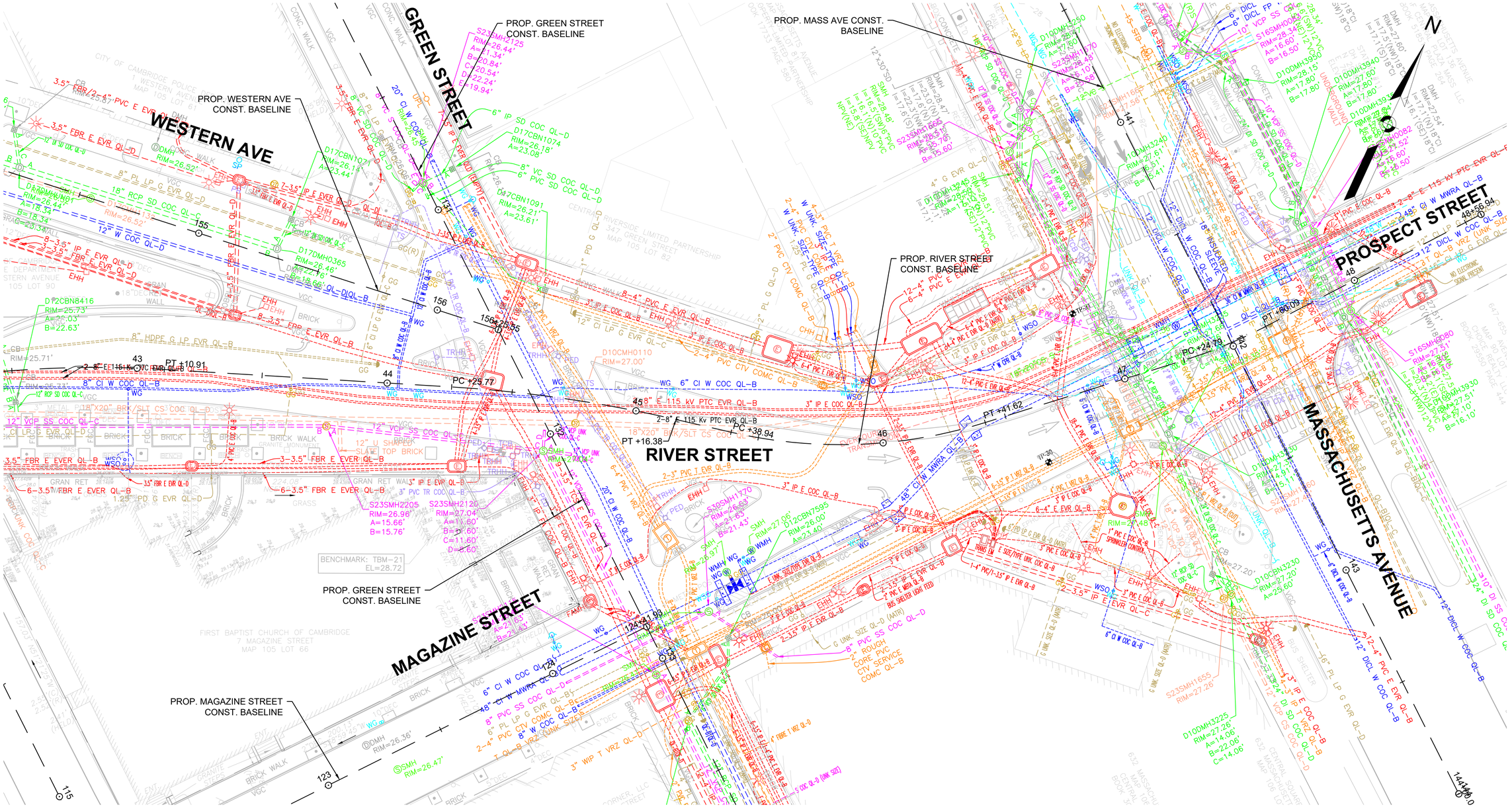

SEE SHEET EX-1.10

PLAN

0 20 50 100

SCALE: 1" = 20'

ISSUED FOR BID

HDR ENGINEERING, INC.
99 HIGH STREET, SUITE 2300
BOSTON, MASSACHUSETTS 02110-2378
(617) 357-7700

BSI ENGINEERING
CIVIL & SUBSURFACE UTILITY ENGINEERING
100 Hallet St
Boston, MA 02124
T: (617) 265 4200
F: (617) 209 1297
www.bsieng.com

FELDMAN LAND SURVEYORS
FELDMAN LAND SURVEYORS
152 HAMPDEN STREET
BOSTON, MASS. 02119
PHONE: (617)357-9740
www.feldmansurveyors.com

COMMONWEALTH OF MASSACHUSETTS
PHILIP FUSCO
CIVIL
No. 45868
REGISTERED PROFESSIONAL ENGINEER

Scale			
Date			
Job No.			
Designed by			
Drawn by			
Checked by	No.	Description	Date
Approved by	REVISIONS		

THE WORKS — CAMBRIDGE DEPARTMENT OF PUBLIC WORKS

Client	CITY OF CAMBRIDGE, MA
Project	RIVER STREET INFRASTRUCTURE AND STREETSCAPE PROJECT
Drawing	**EXISTING CONDITIONS - 7**
Sheet	EX-1.07
Total Sheets	381
File No.	

File: C:\PWWORKING\EAST\01\D0786396\7113XXX_(EXISTING CONDITIONS).DWG Plotted: 4/15/2022 2:37:18 PM

SEE SHEET EX-1.02

SEE SHEET EX-1.09

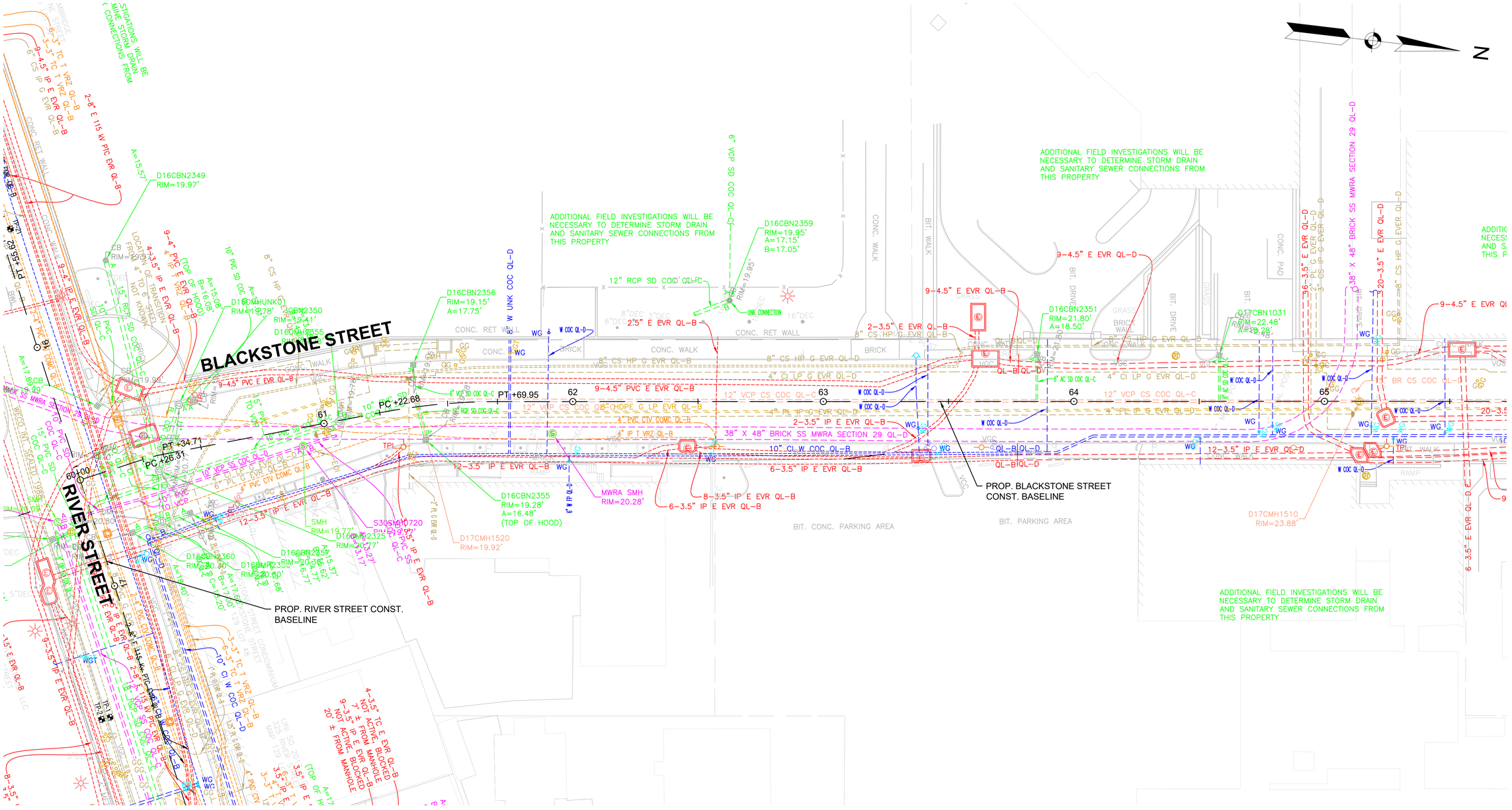

PLAN

0 20 50 100

SCALE: 1" = 20'

ISSUED FOR BID

HDR ENGINEERING, INC.
99 HIGH STREET, SUITE 2300
BOSTON, MASSACHUSETTS 02110–2378
(617) 357–7700

BSI ENGINEERING
CIVIL & SUBSURFACE UTILITY ENGINEERING
100 Hallet St
Boston, MA 02124
T: (617) 265 4200
F: (617) 209 1297
www.bsieng.com

FELDMAN LAND SURVEYORS
FELDMAN LAND SURVEYORS
152 HAMPDEN STREET
BOSTON, MASS. 02119
PHONE: (617)357-9740
www.feldmansurveyors.com

COMMONWEALTH OF MASSACHUSETTS
PHILIP FUSCO
CIVIL
No. 45868
REGISTERED PROFESSIONAL ENGINEER

Scale			
Date			
Job No.			
Designed by			
Drawn by			
Checked by	No.	Description	Date
Approved by	REVISIONS		

THE WORKS — CAMBRIDGE DEPARTMENT OF PUBLIC WORKS

Client: CITY OF CAMBRIDGE, MA	Sheet: EX-1.08
Project: RIVER STREET INFRASTRUCTURE AND STREETSCAPE PROJECT	Total Sheets: 381
Drawing: **EXISTING CONDITIONS - 8**	File No.

File: C:\PWWORKING\EAST01\D07863961713XXX_(EXISTING CONDITIONS).DWG Plotted: 4/15/2022 2:37:28 PM

SEE SHEET EX-1.08

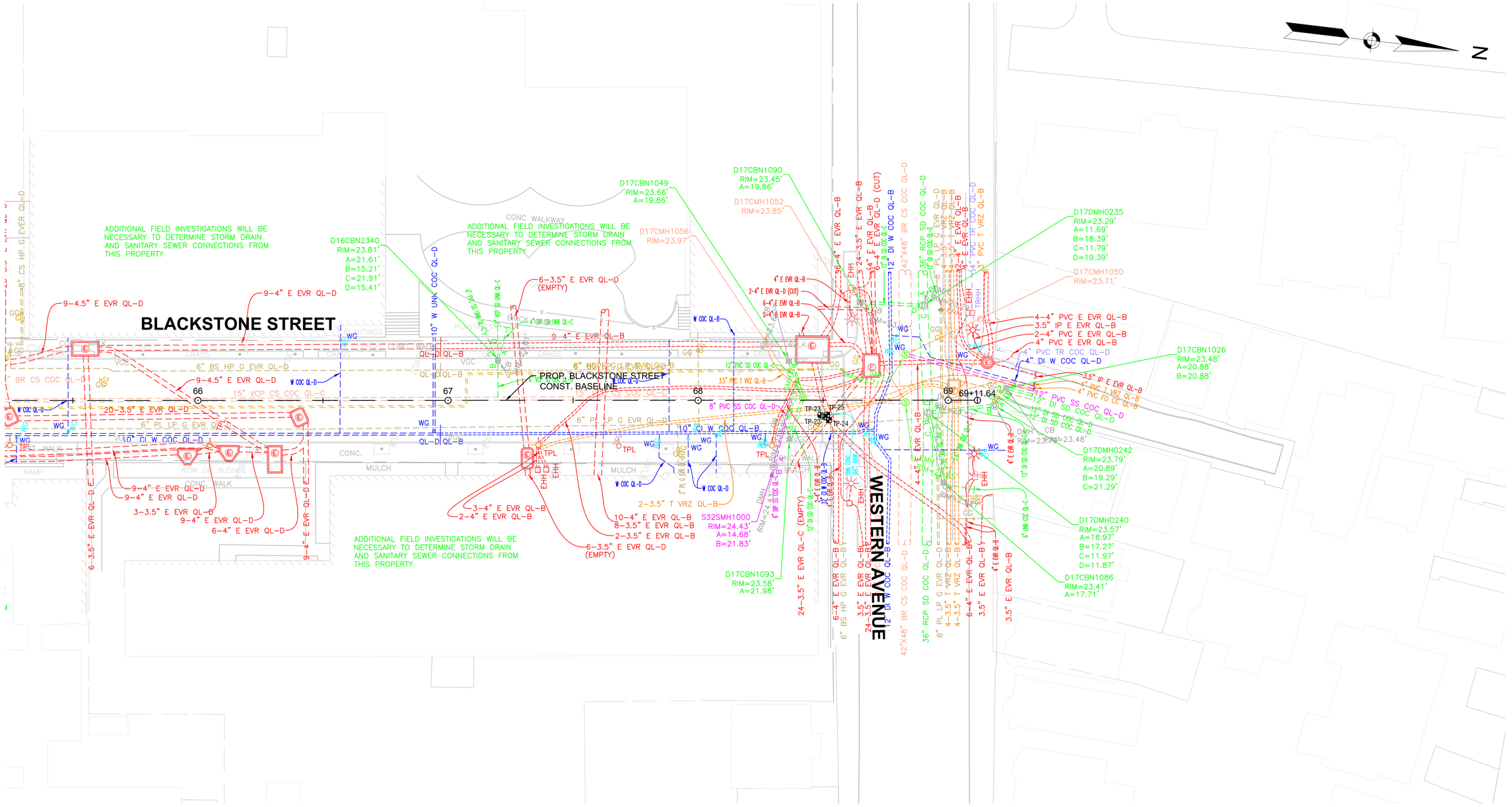

PLAN

0 20 50 100

SCALE: 1" = 20'

ISSUED FOR BID

HDR ENGINEERING, INC.
99 HIGH STREET, SUITE 2300
BOSTON, MASSACHUSETTS 02110-2378
(617) 357-7700

BSI ENGINEERING
CIVIL & SUBSURFACE UTILITY ENGINEERING
100 Hallet St
Boston, MA 02124
T: (617) 265 4200
F: (617) 209 1297
www.bsieng.com

FELDMAN LAND SURVEYORS
FELDMAN LAND SURVEYORS
152 HAMPDEN STREET
BOSTON, MASS. 02119
PHONE: (617)357-9740
www.feldmansurveyors.com

COMMONWEALTH OF MASSACHUSETTS
PHILIP FUSCO
CIVIL
No. 45868
REGISTERED PROFESSIONAL ENGINEER

Scale			
Date			
Job No.			
Designed by			
Drawn by			
Checked by	No.	Description	Date
Approved by	REVISIONS		

THE WORKS
CAMBRIDGE DEPARTMENT OF PUBLIC

Client: CITY OF CAMBRIDGE, MA	Sheet: EX-1.09
Project: RIVER STREET INFRASTRUCTURE AND STREETSCAPE PROJECT	Total Sheets: 381
Drawing: **EXISTING CONDITIONS - 9**	File No.

File: C:\PW\WORKING\EAST01\D0786396\7113XXX_(EXISTING CONDITIONS).DWG Plotted: 4/15/2022 2:37:38 PM

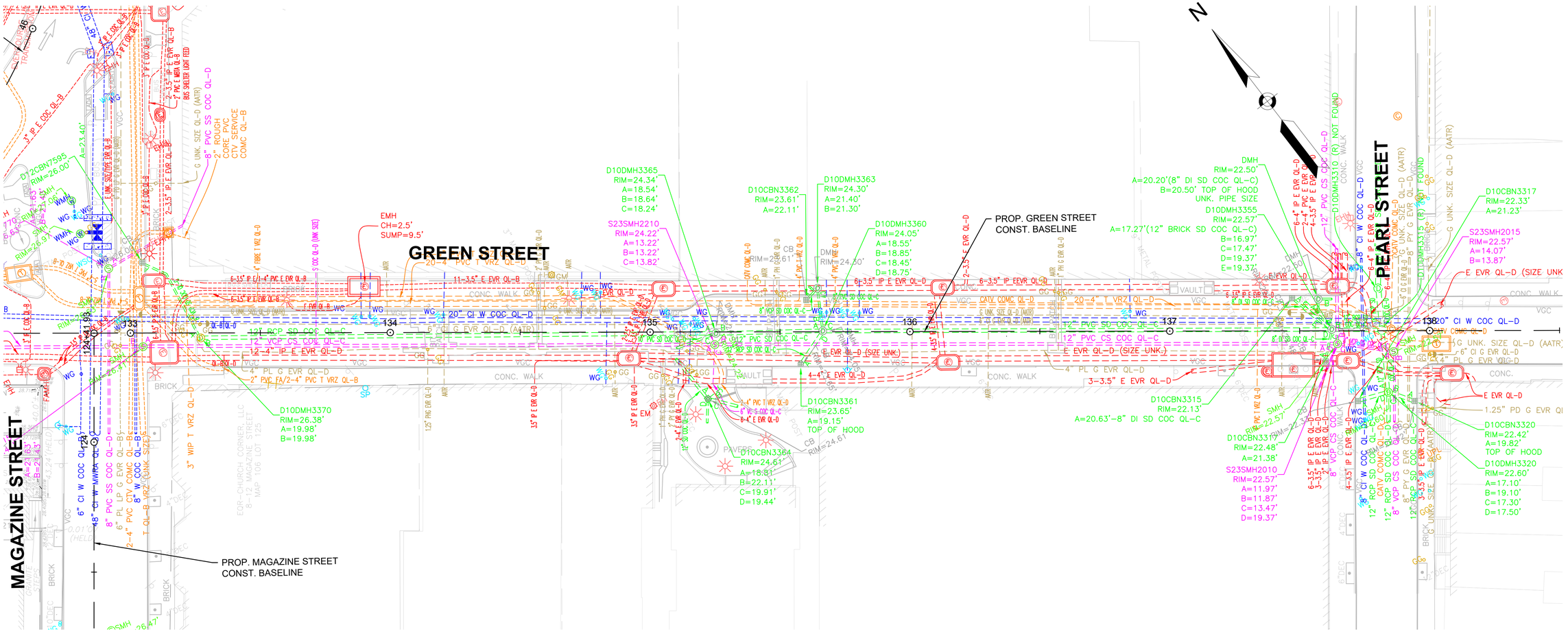

PLAN

0 20 50 100

SCALE: 1" = 20'

ISSUED FOR BID

HDR ENGINEERING, INC.
99 HIGH STREET, SUITE 2300
BOSTON, MASSACHUSETTS 02110-2378
(617) 357-7700

BSI ENGINEERING
CIVIL & SUBSURFACE UTILITY ENGINEERING
100 Hallet St
Boston, MA 02124
T: (617) 265 4200
F: (617) 209 1297
www.bsieng.com

FELDMAN LAND SURVEYORS
FELDMAN LAND SURVEYORS
152 HAMPDEN STREET
BOSTON, MASS. 02119
PHONE: (617)357-9740
www.feldmansurveyors.com

COMMONWEALTH OF MASSACHUSETTS
PHILIP FUSCO CIVIL No. 45868
REGISTERED PROFESSIONAL ENGINEER

Scale			
Date			
Job No.			
Designed by			
Drawn by			
Checked by	No.	Description	Date
Approved by	REVISIONS		

CAMBRIDGE DEPARTMENT OF PUBLIC WORKS

Client	CITY OF CAMBRIDGE, MA	Sheet	EX-1.10
Project	RIVER STREET INFRASTRUCTURE AND STREETSCAPE PROJECT	Total Sheets	381
Drawing	**EXISTING CONDITIONS - 10**	File No.	

File: C:\PW\WORKING\EAST01\D0786396\7113XXX_(EXISTING CONDITIONS).DWG Plotted: 4/15/2022 2:37:48 PM

SEE SHEET EX-1.10

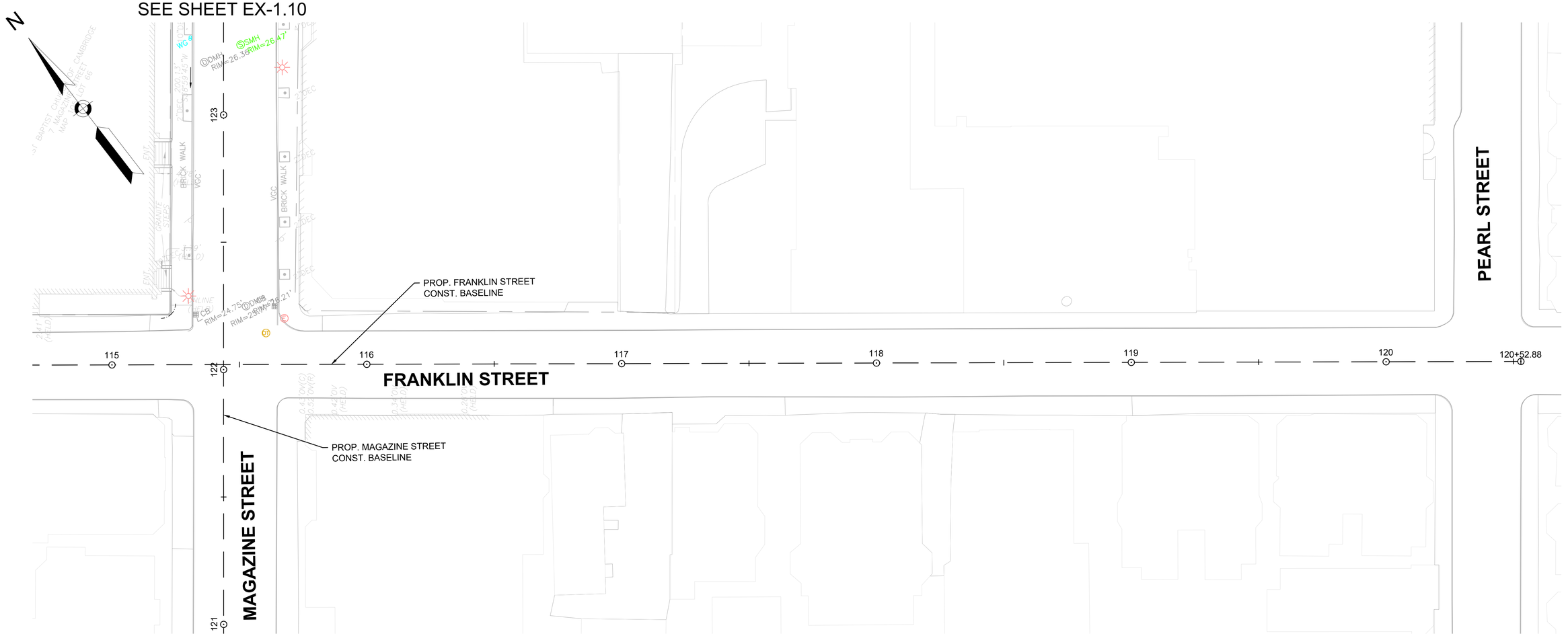

PLAN

0 20 50 100

SCALE: 1" = 20'

ISSUED FOR BID

HDR ENGINEERING, INC.
99 HIGH STREET, SUITE 2300
BOSTON, MASSACHUSETTS 02110–2378
(617) 357–7700

BSI ENGINEERING
CIVIL & SUBSURFACE UTILITY ENGINEERING
100 Hallet St
Boston, MA 02124
T: (617) 265 4200
F: (617) 209 1297
www.bsieng.com

FELDMAN LAND SURVEYORS
FELDMAN LAND SURVEYORS
152 HAMPDEN STREET
BOSTON, MASS. 02119
PHONE: (617)357-9740
www.feldmansurveyors.com

COMMONWEALTH OF MASSACHUSETTS
PHILIP FUSCO
CIVIL
No. 45868
REGISTERED PROFESSIONAL ENGINEER

Scale			
Date			
Job No.			
Designed by			
Drawn by			
Checked by	No.	Description	Date
Approved by	REVISIONS		

THE WORKS — CAMBRIDGE DEPARTMENT OF PUBLIC WORKS

Client: CITY OF CAMBRIDGE, MA	Sheet: EX-1.11
Project: RIVER STREET INFRASTRUCTURE AND STREETSCAPE PROJECT	Total Sheets: 381
Drawing: **EXISTING CONDITIONS - 11**	File No.

File: C:\PWWORKING\EAST01\D0786396\7113XXX_(EXISTING CONDITIONS).DWG Plotted: 4/15/2022 2:37:59 PM

QUALITY LEVEL A VACUUM EXCAVATION — TP-1

NORTHING	2957209.5
EASTING	760494.5
GROUND EL.	11.58'
MEASURE DOWN TOP	-2.2'
MEASURE DOWN BOT.	N/A
TOP UTILITY EL.	9.38'
BOT. UTILITY EL.	N/A

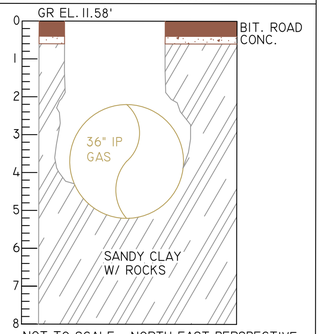

NOT TO SCALE - NORTH EAST PERSPECTIVE

QUALITY LEVEL A VACUUM EXCAVATION — TP-2

NORTHING	2957206.3
EASTING	760495.7
GROUND EL.	12.0'
MEASURE DOWN TOP	-3.1'
MEASURE DOWN BOT.	N/A
TOP UTILITY EL.	8.9'
BOT. UTILITY EL.	N/A

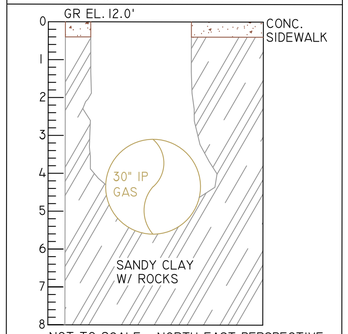

NOT TO SCALE - NORTH EAST PERSPECTIVE

QUALITY LEVEL A VACUUM EXCAVATION — TP-3

NORTHING	2957301.9
EASTING	760683.4
GROUND EL.	11.2'
MEASURE DOWN TOP	-2.8'
MEASURE DOWN BOT.	N/A
TOP UTILITY EL.	8.4'
BOT. UTILITY EL.	N/A

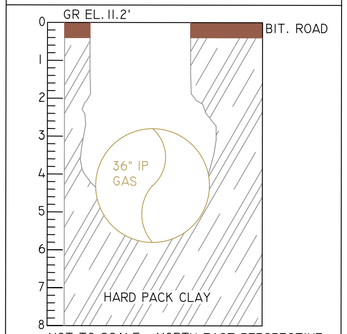

NOT TO SCALE - NORTH EAST PERSPECTIVE

QUALITY LEVEL A VACUUM EXCAVATION — TP-4

NORTHING	2957298.6
EASTING	760685.1
GROUND EL.	11.1'
MEASURE DOWN TOP	-3.3'
MEASURE DOWN BOT.	N/A
TOP UTILITY EL.	7.8'
BOT. UTILITY EL.	N/A

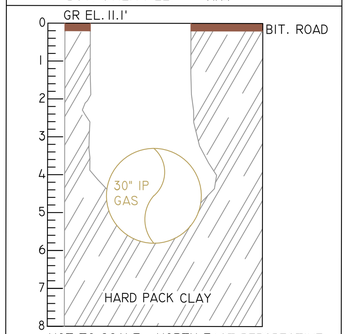

NOT TO SCALE - NORTH EAST PERSPECTIVE

QUALITY LEVEL A VACUUM EXCAVATION — TP-5

NORTHING	2957491.8
EASTING	761107.6
GROUND EL.	13.7'
MEASURE DOWN TOP	-3.2 '
MEASURE DOWN BOT.	N/A
TOP UTILITY EL.	10.5'
BOT. UTILITY EL.	N/A

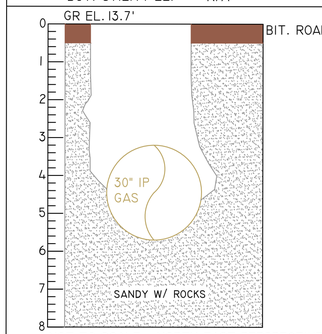

NOT TO SCALE - NORTH EAST PERSPECTIVE

QUALITY LEVEL A VACUUM EXCAVATION — TP-6

NORTHING	2957495.5
EASTING	761105.6
GROUND EL.	13.8'
MEASURE DOWN TOP	-2.8'
MEASURE DOWN BOT.	N/A
TOP UTILITY EL.	11.0'
BOT. UTILITY EL.	N/A

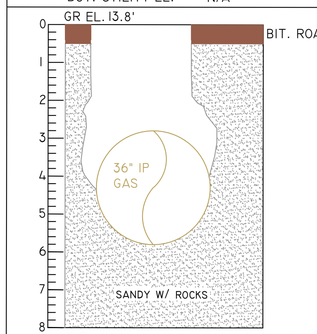

NOT TO SCALE - NORTH EAST PERSPECTIVE

QUALITY LEVEL A VACUUM EXCAVATION — TP-7

NORTHING	2957822.7
EASTING	761816.5
GROUND EL.	20.8'
MEASURE DOWN TOP	-3.3'
MEASURE DOWN BOT.	N/A
TOP UTILITY EL.	17.5'
BOT. UTILITY EL.	N/A

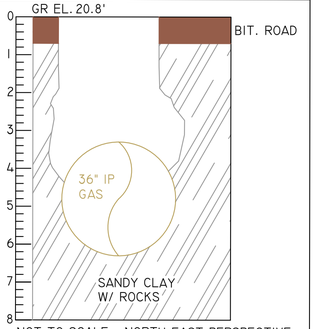

NOT TO SCALE - NORTH EAST PERSPECTIVE

QUALITY LEVEL A VACUUM EXCAVATION — TP-8

NORTHING	2957819.4
EASTING	761818.3
GROUND EL.	20.7'
MEASURE DOWN TOP	-3.5'
MEASURE DOWN BOT.	N/A
TOP UTILITY EL.	17.2'
BOT. UTILITY EL.	N/A

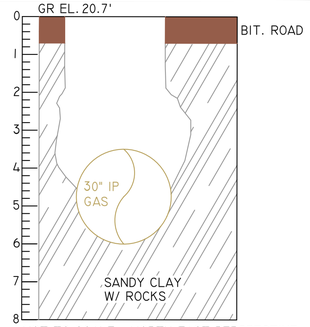

NOT TO SCALE - NORTH EAST PERSPECTIVE

QUALITY LEVEL A VACUUM EXCAVATION — TP-9

NORTHING	2957982.6
EASTING	762091.4
GROUND EL.	19.2'
MEASURE DOWN TOP	-3.6'
MEASURE DOWN BOT.	N/A
TOP UTILITY EL.	15.6'
BOT. UTILITY EL.	N/A

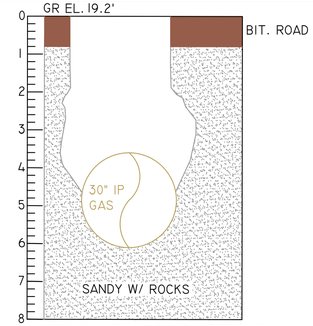

NOT TO SCALE - NORTH EAST PERSPECTIVE

QUALITY LEVEL A VACUUM EXCAVATION — TP-10

NORTHING	2957985.1
EASTING	762088.5
GROUND EL.	19.2'
MEASURE DOWN TOP	-1.4' / -3.0'
MEASURE DOWN BOT.	-2.9'
TOP UTILITY EL.	17.8' / 16.2'
BOT. UTILITY EL.	16.3'

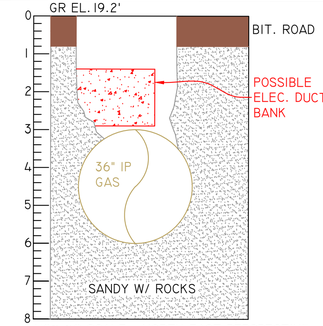

NOT TO SCALE - NORTH EAST PERSPECTIVE

QUALITY LEVEL A VACUUM EXCAVATION — TP-11

NORTHING	2957013.3
EASTING	760001.4
GROUND EL.	19.0'
MEASURE DOWN TOP	-0.9'
MEASURE DOWN BOT.	N/A
TOP UTILITY EL.	18.1'
BOT. UTILITY EL.	N/A

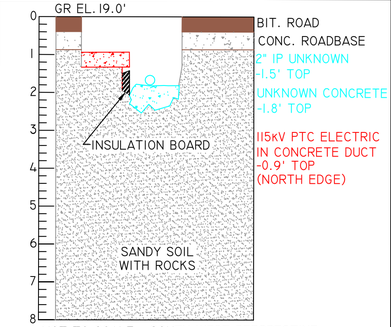

NOT TO SCALE - SOUTH WEST PERSPECTIVE

ISSUED FOR BID

HDR ENGINEERING, INC.
99 HIGH STREET, SUITE 2300
BOSTON, MASSACHUSETTS 02110-2378
(617) 357-7700

BSI ENGINEERING
CIVIL & SUBSURFACE UTILITY ENGINEERING
100 Hallet St
Boston, MA 02124
T: (617) 265 4200
F: (617) 209 1297
www.bsieng.com

COMMONWEALTH OF MASSACHUSETTS
PHILIP FUSCO
CIVIL
No. 45868
REGISTERED PROFESSIONAL ENGINEER

Scale			
Date			
Job No.			
Designed by			
Drawn by			
Checked by	No.	Description	Date
Approved by	REVISIONS		

THE WORKS — CAMBRIDGE DEPARTMENT OF PUBLIC

Client: CITY OF CAMBRIDGE, MA

Project: RIVER STREET
INFRASTRUCTURE AND STREETSCAPE PROJECT

Drawing: **EXISTING SUBSURFACE CONDITIONS TEST PITS - 1**

Sheet: EX-2.01
Total Sheets: 381
File No.:

File: C:\PWWORKING\EAST\01\D0786396\7113XXX_(EXISTING CONDITIONS).DWG Plotted: 4/15/2022 2:38:05 PM

QUALITY LEVEL A
VACUUM EXCAVATION
TP-12

NORTHING	2957010.7
EASTING	760002.6
GROUND EL.	19.1'
MEASURE DOWN TOP	-1.0'
MEASURE DOWN BOT.	-3.7'
TOP UTILITY EL.	18.1'
BOT. UTILITY EL.	15.4'

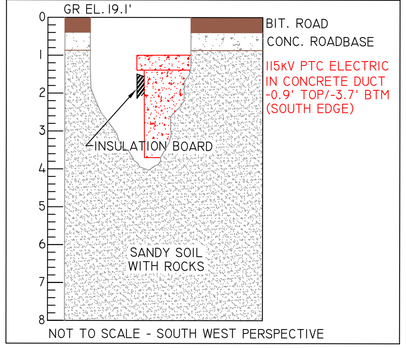

NOT TO SCALE - SOUTH WEST PERSPECTIVE

QUALITY LEVEL A
VACUUM EXCAVATION
TP-13

NORTHING	2957010.9
EASTING	760006.9
GROUND EL.	19.0'
MEASURE DOWN TOP	-2.1'
MEASURE DOWN BOT.	-3.2'
TOP UTILITY EL.	16.9
BOT. UTILITY EL.	15.8'

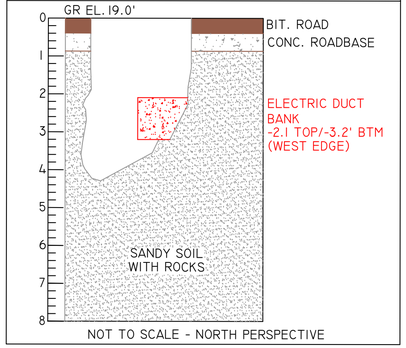

NOT TO SCALE - NORTH PERSPECTIVE

QUALITY LEVEL A
VACUUM EXCAVATION
TP-14

NORTHING	2957003.3
EASTING	759988.8
GROUND EL.	19.9'
MEASURE DOWN TOP	-3.0'
MEASURE DOWN BOT.	-4.8'
TOP UTILITY EL.	16.9'
BOT. UTILITY EL.	15.1'

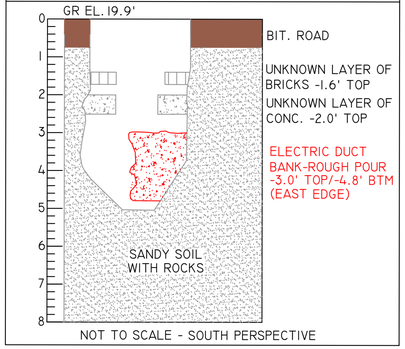

NOT TO SCALE - SOUTH PERSPECTIVE

QUALITY LEVEL A
VACUUM EXCAVATION
TP-15

NORTHING	2957010.9
EASTING	760006.9
GROUND EL.	19.6'
MEASURE DOWN TOP	-3.7'
MEASURE DOWN BOT.	-6.7
TOP UTILITY EL.	15.9
BOT. UTILITY EL.	12.9'

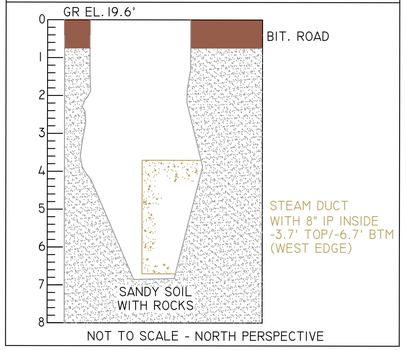

NOT TO SCALE - NORTH PERSPECTIVE

QUALITY LEVEL A
VACUUM EXCAVATION
TP-16

NORTHING	2957049.6
EASTING	760060.7
GROUND EL.	18.7'
MEASURE DOWN TOP	-1.4
MEASURE DOWN BOT.	-2.5'
TOP UTILITY EL.	17.3'
BOT. UTILITY EL.	16.2'

QUALITY LEVEL A
VACUUM EXCAVATION
TP-17

NORTHING	2957050.9
EASTING	760060.1
GROUND EL.	18.7'
MEASURE DOWN TOP	-0.85
MEASURE DOWN BOT.	-1.9'
TOP UTILITY EL.	17.8'
BOT. UTILITY EL.	16.8'

QUALITY LEVEL A
VACUUM EXCAVATION
TP-18

NORTHING	2957050.0
EASTING	760060.4
GROUND EL.	18.7'
MEASURE DOWN TOP	-3.5'
MEASURE DOWN BOT.	N/A
TOP UTILITY EL.	15.2'
BOT. UTILITY EL.	N/A

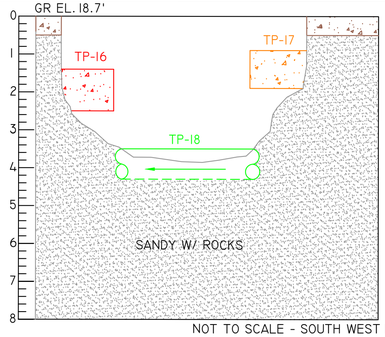

CONC. SIDEWALK

TP-16
ELECTRIC DUCT BANK

TP-17
TELEPHONE DUCT BANK

TP-18
10" VCP STORM DRAIN

NOT TO SCALE - SOUTH WEST PERSPECTIVE

QUALITY LEVEL A
VACUUM EXCAVATION
TP-19

NORTHING	2957089.2
EASTING	760162.6
GROUND EL.	18.4'
MEASURE DOWN TOP	-3.0'
MEASURE DOWN BOT.	N/A
TOP UTILITY EL.	15.4'
BOT. UTILITY EL.	N/A

QUALITY LEVEL A
VACUUM EXCAVATION
TP-20

NORTHING	2957089.7
EASTING	760162.5
GROUND EL.	18.4'
MEASURE DOWN TOP	-5.6'
MEASURE DOWN BOT.	N/A
TOP UTILITY EL.	12.8'
BOT. UTILITY EL.	N/A

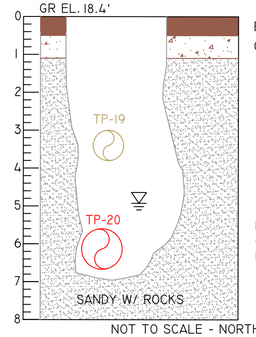

BIT. ROAD
CONCRETE SUB-BASE

TP-19
6" PLASTIC GAS MAIN
NO TRACE WIRE PRESENT

GROUND WATER TABLE EL 13.3'

TP-20
115 kV PTC ELECTRICAL CONDUIT
COULD NOT VERIFY PIPE DIAMETER
BELOW WATER TABLE

NOT TO SCALE - NORTH EAST PERSPECTIVE

QUALITY LEVEL A
VACUUM EXCAVATION
TP-21

NORTHING	2957147.3
EASTING	760305.6
GROUND EL.	19.4'
MEASURE DOWN TOP	-1.7'
MEASURE DOWN BOT.	-2.4'
TOP UTILITY EL.	17.7'
BOT. UTILITY EL.	17.0'

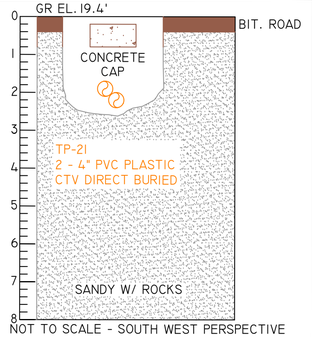

NOT TO SCALE - SOUTH WEST PERSPECTIVE

ISSUED FOR BID

HDR ENGINEERING, INC.
99 HIGH STREET, SUITE 2300
BOSTON, MASSACHUSETTS 02110-2378
(617) 357-7700

BSI ENGINEERING
CIVIL & SUBSURFACE UTILITY ENGINEERING
100 Hallet St
Boston, MA 02124
T: (617) 265 4200
F: (617) 209 1297
www.bsieng.com

COMMONWEALTH OF MASSACHUSETTS
PHILIP FUSCO
CIVIL
No. 45868
REGISTERED PROFESSIONAL ENGINEER

Scale			
Date			
Job No.			
Designed by			
Drawn by			
Checked by	No.	Description	Date
Approved by	REVISIONS		

THE WORKS — CAMBRIDGE DEPARTMENT OF PUBLIC

Client	CITY OF CAMBRIDGE, MA
Project	RIVER STREET INFRASTRUCTURE AND STREETSCAPE PROJECT
Drawing	**EXISTING SUBSURFACE CONDITIONS TEST PITS - 2**
Sheet	EX-2.02
Total Sheets	381
File No.	

File: C:\PWWORKING\EAST01\D0786396\7113XXX_(EXISTING CONDITIONS).DWG Plotted: 4/15/2022 2:38:15 PM

QUALITY LEVEL A VACUUM EXCAVATION TP-22		QUALITY LEVEL A VACUUM EXCAVATION TP-23		QUALITY LEVEL A VACUUM EXCAVATION TP-24		QUALITY LEVEL A VACUUM EXCAVATION TP-25	
NORTHING	2958024.9	NORTHING	2958023.4	NORTHING	2958027.0	NORTHING	2958026.0
EASTING	760278.5	EASTING	760277.9	EASTING	760279.5	EASTING	760277.6
GROUND EL.	24.2'	GROUND EL.	24.2'	GROUND EL.	24.2'	GROUND EL.	24.2'
MEASURE DOWN TOP	-1.3'	MEASURE DOWN TOP	-2.2'	MEASURE DOWN TOP	-2.5'	MEASURE DOWN TOP	-4.6'
MEASURE DOWN BOT.	-2.1'	MEASURE DOWN BOT.	N/A	MEASURE DOWN BOT.	-4.1'	MEASURE DOWN BOT.	N/A
TOP UTILITY EL.	22.9'	TOP UTILITY EL.	22.0'	TOP UTILITY EL.	21.7'	TOP UTILITY EL.	19.6'
BOT. UTILITY EL.	22.1'	BOT. UTILITY EL.	N/A	BOT. UTILITY EL.	20.1'	BOT. UTILITY EL.	N/A

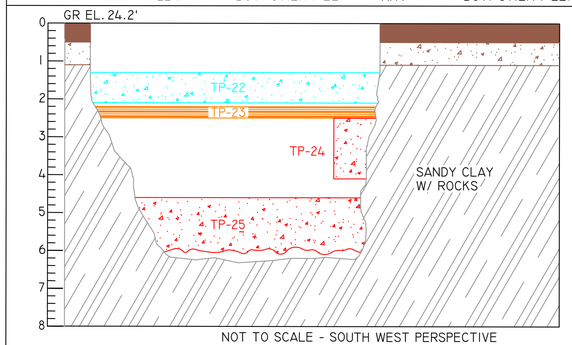

BIT. ROAD

CONCRETE SUB-BASE

TP-22
UNKNOWN CONCRETE DUCT BANK
NO ELECTRONIC SIGNAL PRESENT

TP-23
4" PVC TELEPHONE
DIRECT BURIED

TP-24
CONCRETE ELECTRICAL DUCT BANK

TP-25
CONCRETE ELECTRICAL DUCT BANK
ROUGH POUR EDGE PREVENTED REACHING
BOTTOM OF DUCT BANK WITHIN TEST HOLE

NOT TO SCALE - SOUTH WEST PERSPECTIVE

QUALITY LEVEL A VACUUM EXCAVATION TP-26		QUALITY LEVEL A VACUUM EXCAVATION TP-27	
NORTHING	2957942.9	NORTHING	2957943.0
EASTING	762070.3	EASTING	762070.5
GROUND EL.	28.4'	GROUND EL.	28.4'
MEASURE DOWN TOP	-3.7'	MEASURE DOWN TOP	-3.1'
MEASURE DOWN BOT.	-4.8'	MEASURE DOWN BOT.	N/A
TOP UTILITY EL.	24.7'	TOP UTILITY EL.	25.3'
BOT. UTILITY EL.	23.6'	BOT. UTILITY EL.	N/A

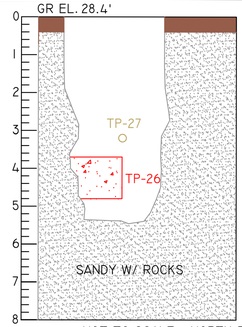

BIT. ROAD

TP-27
GAS SERVICE
2" IRON PIPE

TP-26
ELECTRIC DUCT BANK

NOT TO SCALE - NORTH EAST PERSPECTIVE

QUALITY LEVEL A VACUUM EXCAVATION TP-28		QUALITY LEVEL A VACUUM EXCAVATION TP-29	
NORTHING	2957991.0	NORTHING	2957990.7
EASTING	762125.6	EASTING	762125.6
GROUND EL.	28.4'	GROUND EL.	28.4'
MEASURE DOWN TOP	-1.9'	MEASURE DOWN TOP	-3.1'
MEASURE DOWN BOT.	-3.0'	MEASURE DOWN BOT.	N/A
TOP UTILITY EL.	26.5'	TOP UTILITY EL.	25.3'
BOT. UTILITY EL.	25.4'	BOT. UTILITY EL.	N/A

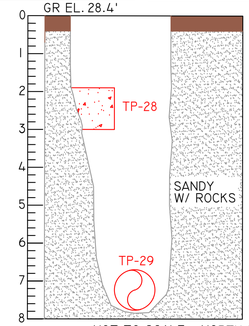

BIT. ROAD

TP-28
ELECTRIC DUCT BANK

TP-29
115 kV PTC ELECTRICAL
8" IRON PIPE

NOT TO SCALE - NORTH EAST PERSPECTIVE

QUALITY LEVEL A VACUUM EXCAVATION TP-30	
NORTHING	2958421.6
EASTING	763143.2
GROUND EL.	27.1'
MEASURE DOWN TOP	-2.5'
MEASURE DOWN BOT.	-3.7'
TOP UTILITY EL.	24.6'
BOT. UTILITY EL.	23.4'

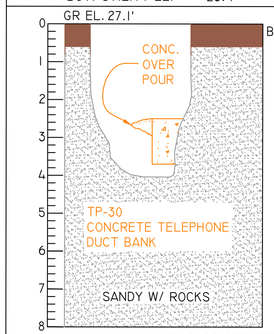

BIT. ROAD

NOT TO SCALE - NORTH EAST PERSPECTIVE

QUALITY LEVEL A VACUUM EXCAVATION TP-31	
NORTHING	2958479.4
EASTING	763127.1
GROUND EL.	27.6'
MEASURE DOWN TOP	-4.0'
MEASURE DOWN BOT.	-5.1'
TOP UTILITY EL.	23.6'
BOT. UTILITY EL.	22.3'

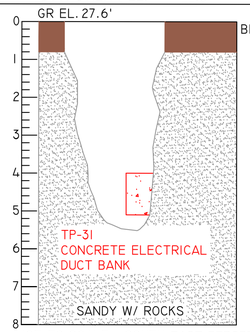

BIT. ROAD

NOT TO SCALE - SOUTH EAST PERSPECTIVE

QUALITY LEVEL A VACUUM EXCAVATION TP-32		QUALITY LEVEL A VACUUM EXCAVATION TP-33	
NORTHING	2957554.4	NORTHING	2957553.2
EASTING	761175.4	EASTING	761175.9
GROUND EL.	24.1'	GROUND EL.	24.1'
MEASURE DOWN TOP	-3.1'	MEASURE DOWN TOP	-2.7'
MEASURE DOWN BOT.	N/A	MEASURE DOWN BOT.	N/A
TOP UTILITY EL.	21.0'	TOP UTILITY EL.	21.4'
BOT. UTILITY EL.	N/A	BOT. UTILITY EL.	N/A

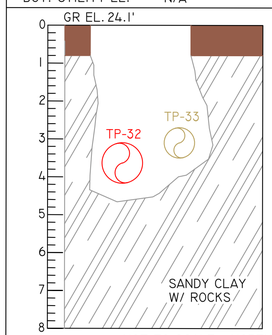

BIT. ROAD

TP-33
6" IRON GAS MAIN
NO TRACE WIRE PRESENT

TP-33
115 kV PTC ELECTRICAL CONDUIT
8" IRON PIPE

NOT TO SCALE - NORTH EAST PERSPECTIVE

2:38:25 PM

File: C:\PWWORKING\EAST01\D0786396\7113XXX_(EXISTING CONDITIONS).DWG Plotted: 4/15/2022

ISSUED FOR BID

HDR ENGINEERING, INC.
99 HIGH STREET, SUITE 2300
BOSTON, MASSACHUSETTS 02110-2378
(617) 357-7700

BSI ENGINEERING
CIVIL & SUBSURFACE UTILITY ENGINEERING
100 Hallet St
Boston, MA 02124
T: (617) 265 4200
F: (617) 209 1297
www.bsieng.com

COMMONWEALTH OF MASSACHUSETTS
PHILIP FUSCO
CIVIL
No. 45868
REGISTERED PROFESSIONAL ENGINEER

Scale			
Date			
Job No.			
Designed by			
Drawn by			
Checked by	No.	Description	Date
Approved by	REVISIONS		

THE CAMBRIDGE DEPARTMENT OF PUBLIC WORKS

Client: CITY OF CAMBRIDGE, MA

Project: RIVER STREET
INFRASTRUCTURE AND STREETSCAPE PROJECT

Drawing: **EXISTING SUBSURFACE CONDITIONS TEST PITS - 3**

Sheet: EX-2.03

Total Sheets: 381

File No.

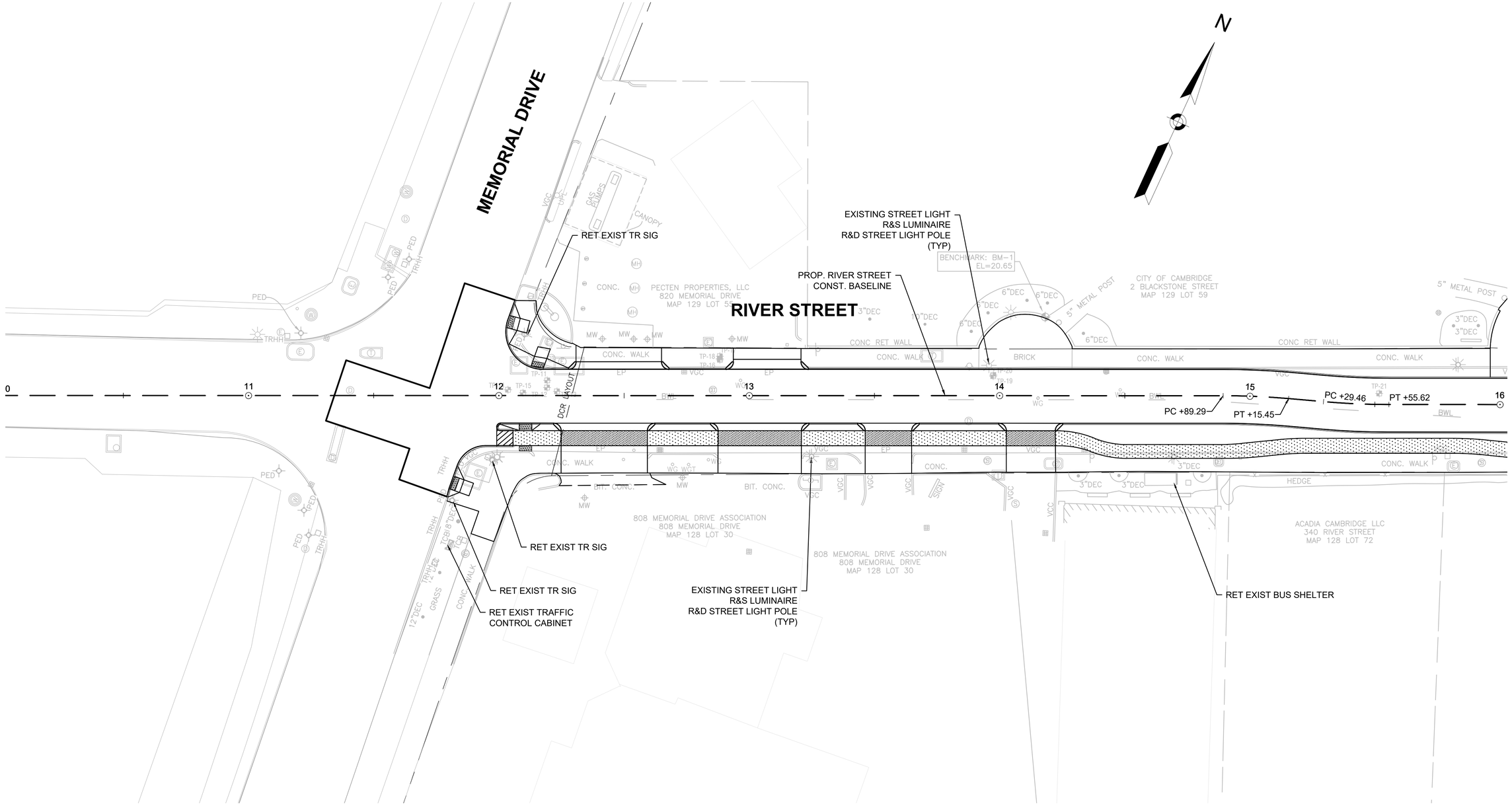

NOTES:

1. SEE STREETSCAPE PLANS FOR DISPOSITION OF EXISTING TREES.
2. SEE UTILITY COORDINATION PLANS FOR DISPOSITION OF EXISTING HYDRANTS.

PLAN

0 20 50 100

SCALE: 1" = 20'

ISSUED FOR BID

HDR ENGINEERING, INC.
99 HIGH STREET, SUITE 2300
BOSTON, MASSACHUSETTS 02110-2378
(617) 357-7700

BSI ENGINEERING
CIVIL & SUBSURFACE UTILITY ENGINEERING
100 Hallet St
Boston, MA 02124
T: (617) 265 4200
F: (617) 209 1297
www.bsieng.com

FELDMAN LAND SURVEYORS
FELDMAN LAND SURVEYORS
152 HAMPDEN STREET
BOSTON, MASS. 02119
PHONE: (617)357-9740
www.feldmansurveyors.com

COMMONWEALTH OF MASSACHUSETTS
PHILIP FUSCO
CIVIL
No. 45868
REGISTERED PROFESSIONAL ENGINEER

Scale			
Date			
Job No.			
Designed by			
Drawn by			
Checked by	No.	Description	Date
Approved by	REVISIONS		

THE WORKS
CAMBRIDGE DEPARTMENT OF PUBLIC

Client: CITY OF CAMBRIDGE, MA	Sheet: DP1.01
Project: RIVER STREET INFRASTRUCTURE AND STREETSCAPE PROJECT	Total Sheets: 381
Drawing: **DISPOSITION PLANS - 1**	File No.

File: C:\PWWORKING\EAST01\D07863961711\3XXX_(DISPOSITION PLANS).DWG Plotted: 4/15/2022 2:40:09 PM

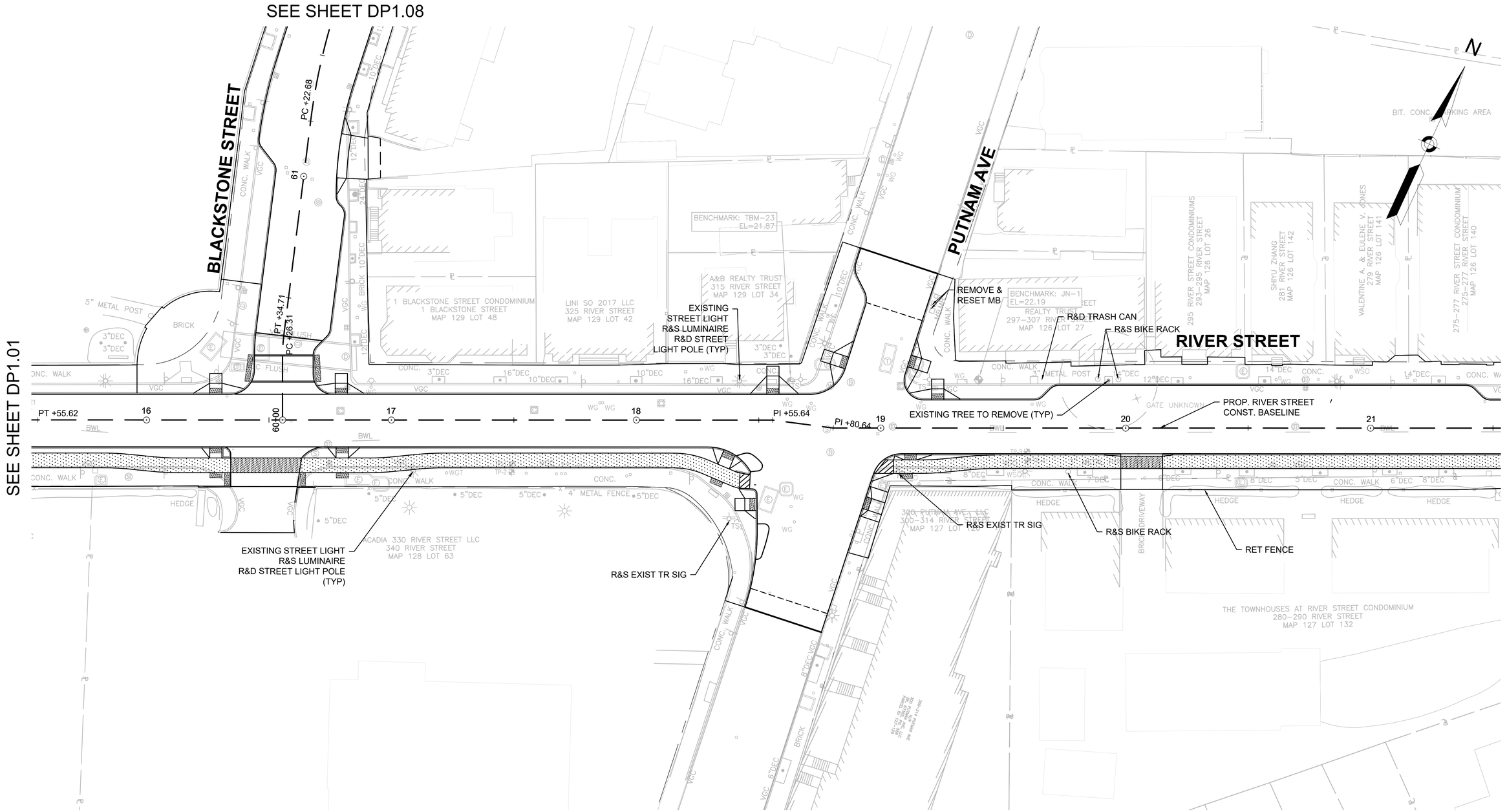

PLAN

0 20 50 100

SCALE: 1" = 20'

CONFORMED SET

File: C:\PWWORKING\EAST01\D0786396\7113XXX_(DISPOSITION PLANS).DWG Plotted: 8/22/2022 6:22:42 PM

HDR ENGINEERING, INC.
99 HIGH STREET, SUITE 2300
BOSTON, MASSACHUSETTS 02110-2378
(617) 357-7700

BSI ENGINEERING
CIVIL & SUBSURFACE UTILITY ENGINEERING
100 Hallet St
Boston, MA 02124
T: (617) 265 4200
F: (617) 209 1297
www.bsieng.com

FELDMAN LAND SURVEYORS
FELDMAN LAND SURVEYORS
152 HAMPDEN STREET
BOSTON, MASS. 02119
PHONE: (617)357-9740
www.feldmansurveyors.com

COMMONWEALTH OF MASSACHUSETTS
HUGH J. NEENAN
CIVIL
No. 34694
REGISTERED PROFESSIONAL ENGINEER
Hugh J. Neenan
08-24-22

Scale			
Date			
Job No.			
Designed by			
Drawn by	0	CONFORMED SET	8/5/2022
Checked by	No.	Description	Date
Approved by		REVISIONS	

THE WORKS
CAMBRIDGE DEPARTMENT OF PUBLIC

Client	CITY OF CAMBRIDGE, MA	Sheet	DP1.02
Project	RIVER STREET INFRASTRUCTURE AND STREETSCAPE PROJECT	Total Sheets	381
Drawing	DISPOSITION PLANS - 2	File No.	

SEE SHEET DP1.02

SEE SHEET DP1.04

PROP. MONTAGUE STREET
CONST. BASELINE

MONTAGUE STREET

RIVER STREET

EXISTING STREET LIGHT
R&S LUMINAIRE
R&D STREET LIGHT POLE
(TYP)

PROP. RIVER STREET
CONST. BASELINE

EXISTING TREE TO REMOVE (TYP)

PROP. FAIRMONT STREET
CONST. BASELINE

RET FENCE (TYP.)

REMOVE & RESET
MB

FAIRMONT STREET

R&S BIKE RACK

ROCKWELL STREET

EXISTING STREET LIGHT
R&S LUMINAIRE
R&D STREET LIGHT POLE
(TYP)

PROP. ROCKWELL STREET
CONST. BASELINE

PROP. LAUREL STREET
CONST. BASELINE

LAUREL STREET

275–277 RIVER STREET CONDOMINIUM
275–277 RIVER STREET
MAP 126 LOT 140

CAMBRIDGE HOUSING AUTHORITY
261 RIVER STREET
MAP 126 LOT 167

241–255 RIVER STREET CONDOMINIUM
237–253 RIVER STREET
MAP 126 LOT 172

HAROLD H. BECKFORD
231 RIVER STREET
MAP 126 LOT 159

CAMBRIDGE HOUSING AUTHORITY
195–207 RIVER STREET
MAP 126 LOT 173

268 RIVER STREET
CONDOMINIUMS
268 RIVER STREET
MAP 127 LOT 143

250 RIVER STREET CONDOMINIUM
250 RIVER STREET
MAP 127 LOT 121

244 RIVER STREET CONDOMINIUM
244 RIVER STREET
MAP 127 LOT 122

JEANNE E. KOOPMAN
248 RIVER STREET
MAP 127 LOT 122

CAROLINE HUNTER
23 ROCKWELL STREET
MAP 127 LOT 123

NICHOLAS SHAPLYKO &
EKATODERINA SOROKINA
222 RIVER STREET
MAP 127 LOT 93

16–18 LAUREL STREET
CONDOMINIUM
16–18 LAUREL STREET
MAP 127 LOT 94

BENCHMARK: JN–14
EL=29.28

70+00 22 23 24 25 26 27

PC +84.85
PT +09.45
PC +58.08
PT +82.68

PLAN

0 20 50 100

SCALE: 1" = 20'

CONFORMED SET

HDR ENGINEERING, INC.
99 HIGH STREET, SUITE 2300
BOSTON, MASSACHUSETTS 02110–2378
(617) 357–7700

BSI ENGINEERING
CIVIL & SUBSURFACE UTILITY ENGINEERING
100 Hallet St
Boston, MA 02124
T: (617) 265 4200
F: (617) 209 1297
www.bsieng.com

FELDMAN LAND SURVEYORS
FELDMAN LAND SURVEYORS
152 HAMPDEN STREET
BOSTON, MASS. 02119
PHONE: (617)357-9740
www.feldmansurveyors.com

HUGH J. NEENAN CIVIL No. 34694 REGISTERED PROFESSIONAL ENGINEER COMMONWEALTH OF MASSACHUSETTS
Hugh J. Neenan
08-24-22

Scale			
Date			
Job No.			
Designed by			
Drawn by	0	CONFORMED SET	8/5/2022
Checked by	No.	Description	Date
Approved by	REVISIONS		

THE WORKS
CAMBRIDGE DEPARTMENT OF PUBLIC

Client	CITY OF CAMBRIDGE, MA	Sheet	DP1.03
Project	RIVER STREET INFRASTRUCTURE AND STREETSCAPE PROJECT	Total Sheets	381
Drawing	**DISPOSITION PLANS - 3**	File No.	

6:22:58 PM

File: C:\PWORKINGEAST01\D0786396\7113XXX_(DISPOSITION PLANS).DWG Plotted: 8/22/2022

SEE SHEET DP1.03

SEE SHEET DP1.05

HOWARD STREET

JAY STREET

LAUREL STREET

KELLY ROAD

RIVER STREET

EXISTING STREET LIGHT
R&S LUMINAIRE
R&D STREET LIGHT POLE
(TYP)

R&S BIKE RACK

EXISTING TREE TO REMOVE (TYP)

PC +58.08
PT +82.68

PI +32.88

PI +82.11

27
28
29
30
31

R&R MB
59 KELLY ROAD
N/F
BO HU
BK. 142, PG. 104
PARCEL ID: 125-101-59

PROP. RIVER STREET
CONST. BASELINE

R&D TRASH CAN

BENCHMARK: JN-12
EL=30.01

CALIFORNIA RIVER LLC
171-173 RIVER STREET
MAP 125 LOT 106

EDWARD SILVA
183 RIVER STREET
MAP 125 LOT 14

DAVID WISE
177-181 RIVER STREET
MAP 125 LOT 13

DOREEN O. LEWIS
175 RIVER STREET
MAP 125 LOT 105

CHRISTINE DILLON
169 RIVER STREET
MAP 125 LOT 11

DOUGLAS L. HAYDEN
& JOAN KARP
153 RIVER STREET
MAP 125 LOT 34

JEAN-MARY
IRREVOCABLE TRUST
147 RIVER STREET
MAP 125 LOT 33

CITY OF CAMBRIDGE
170 RIVER STREET
MAP 125 LOT 102

LILLIAN E. JONES
168 RIVER STREET
MAP 125 LOT 68

CLARENCE A. &
FRANCES H. COOPER
160 RIVER STREET
MAP 125 LOT 69

SHING-HUEY CHEN
LIVING TRUST
158 RIVER STREET
MAP 125 LOT 70

150-156
RIVER STREET LLC
150-156 RIVER STREET
MAP 125 LOT 71

LLOYD SHELDON
JOHNSON
148 RIVER STREET
MAP 125 LOT 72

EXISTING STREET LIGHT
R&S LUMINAIRE
R&D STREET LIGHT POLE
(TYP)

PROP. KELLY ROAD
CONST. BASELINE

PROP. LAUREL STREET
CONST. BASELINE

PLAN

0 20 50 100

SCALE: 1" = 20'

CONFORMED SET

HDR ENGINEERING, INC.
99 HIGH STREET, SUITE 2300
BOSTON, MASSACHUSETTS 02110-2378
(617) 357-7700

BSI ENGINEERING
CIVIL & SUBSURFACE UTILITY ENGINEERING
100 Hallet St
Boston, MA 02124
T: (617) 265 4200
F: (617) 209 1297
www.bsieng.com

FELDMAN LAND SURVEYORS
FELDMAN LAND SURVEYORS
152 HAMPDEN STREET
BOSTON, MASS. 02119
PHONE: (617)357-9740
www.feldmansurveyors.com

COMMONWEALTH OF MASSACHUSETTS
HUGH J. NEENAN
CIVIL
No. 34694
REGISTERED PROFESSIONAL ENGINEER
Hugh J. Neenan
08-24-22

Scale			
Date			
Job No.			
Designed by			
Drawn by	0	CONFORMED SET	8/5/2022
Checked by	No.	Description	Date
Approved by	REVISIONS		

THE WORKS
CAMBRIDGE DEPARTMENT OF PUBLIC WORKS

Client: CITY OF CAMBRIDGE, MA	Sheet: DP1.04
Project: RIVER STREET INFRASTRUCTURE AND STREETSCAPE PROJECT	Total Sheets: 381
Drawing: **DISPOSITION PLANS - 4**	File No.

File: C:\PW\WORKING\EAST01\D0786396\7113XXX_(DISPOSITION PLANS).DWG Plotted: 8/22/2022 6:23:13 PM

SEE SHEET DP1.04

SEE SHEET DP1.06

N

KINNAIRD STREET

RIVER STREET

PLEASANT STREET

PLEASANT PLACE

COTTAGE STREET

WILLIAM STREET

PROP. PLEASANT STREET NORTH CONST. BASELINE

PROP. RIVER STREET CONST. BASELINE

PROP. PLEASANT STREET SOUTH CONST. BASELINE

PROP. COTTAGE STREET CONST. BASELINE

EXISTING STREET LIGHT
R&S LUMINAIRE
R&D STREET LIGHT POLE
(TYP)

EXISTING TREE TO REMOVE (TYP)

REMOVE & RESET MB SEE NOTE 1

R&S BIKE RACK

R&S BIKE RACKS

R&S PILLAR

R&S PILLARS

R&D TRASH CAN

R&S BENCH

R&R FIRE BOX

R&R TUBMAN PLAQUE SEE STREETSCAPE PLANS

R&S TRASH CAN

R&S PM

PC +18.17

PT +41.20

PC +05.54

PT +17.06

PT +80.07

PC +65.41

82+51.98

90+17.80

100+00

101+16.21

80+00

BENCHMARK: JN-18
EL=30.48

BENCHMARK: BM-758
EL=32.02

133 RIVER STREET CONDOMINIUM
133 RIVER STREET
MAP 125 LOT 103

WEIWEN WANG & LAN FANG
135-139 RIVER STREET
MAP 125 LOT 32

ARTHUR N. DOBELIS
123 RIVER STREET
MAP 125 LOT 57

JENS RYBO & THERESA A. THOMPSON
115 RIVER STREET
MAP 125 LOT 56

109 RIVER STREET LOFTS CONDOMINIUM
109 RIVER STREET
MAP 125 LOT 132

113 RIVER STREET CONDOMINIUM
113 RIVER STREET
MAP 125 LOT 131

103 RIVER STREET LOFTS CONDOMINIUM
103 RIVER STREET
MAP 125 LOT 133

KATHERINE BENNETT & RICHARD P. BOUDREAU
39 PLEASANT STREET
MAP 125 LOT 51

THE KATHLEEN CORBETT REV TRUST
41 RIVER STREET
MAP 105 LOT 16

73-75-77 RIVER STREET CONDOMINIUM
73-75-77 RIVER STREET
MAP 105 LOT 17

THE TUAKOI TRUST
69 RIVER STREET
MAP 105 LOT 138

102 RIVER STREET CONDOMINIUM
102 RIVER STREET
MAP 105 LOT 111

GABRIEL FAMILY TRUST
92 RIVER STREET
MAP 105 LOT 112

HERMAN TUCKWOOD
92 RIVER STREET
MAP 105 LOT 107

84 RIVER STREET REALTY TRUST
84 RIVER STREET
MAP 105 LOT 114

148 RIVER STREET
MAP 125 LOT 72

RAVCO, LLC
53 PLEASANT STREET
MAP 125 LOT 73

CITY OF CAMBRIDGE PUBLIC WORKS DEPARTMENT
PLEASANT STREET
MAP 125 LOT 125

QUING SHENG GAO & CI SUN
44 PLEASANT STREET
MAP 104 LOT 88

PLAN

0 20 50 100

SCALE: 1" = 20'

NOTE:
1. EXISTING MAILBOX TO BE REMOVED AND RELOCATED TO NEW LOCATION AND COORDINATED WITH USPS AND ENGINEER.

CONFORMED SET

HDR ENGINEERING, INC.
99 HIGH STREET, SUITE 2300
BOSTON, MASSACHUSETTS 02110-2378
(617) 357-7700

BSI ENGINEERING
CIVIL & SUBSURFACE UTILITY ENGINEERING
100 Hallet St
Boston, MA 02124
T: (617) 265 4200
F: (617) 209 1297
www.bsieng.com

FELDMAN LAND SURVEYORS
FELDMAN LAND SURVEYORS
152 HAMPDEN STREET
BOSTON, MASS. 02119
PHONE: (617)357-9740
www.feldmansurveyors.com

COMMONWEALTH OF MASSACHUSETTS
HUGH J. NEENAN
CIVIL
No. 34694
REGISTERED PROFESSIONAL ENGINEER
Hugh J. Neenan
08-24-22

Scale			
Date			
Job No.			
Designed by			
Drawn by	0	CONFORMED SET	8/5/2022
Checked by	No.	Description	Date
Approved by	REVISIONS		

THE CAMBRIDGE DEPARTMENT OF PUBLIC WORKS

Client	CITY OF CAMBRIDGE, MA	Sheet	DP1.05
Project	RIVER STREET INFRASTRUCTURE AND STREETSCAPE PROJECT	Total Sheets	381
Drawing	**DISPOSITION PLANS - 5**	File No.	

File: C:\PWWORKING\EAST01\D07863961\7113XXX_(DISPOSITION PLANS).DWG Plotted: 8/22/2022 6:23:28 PM

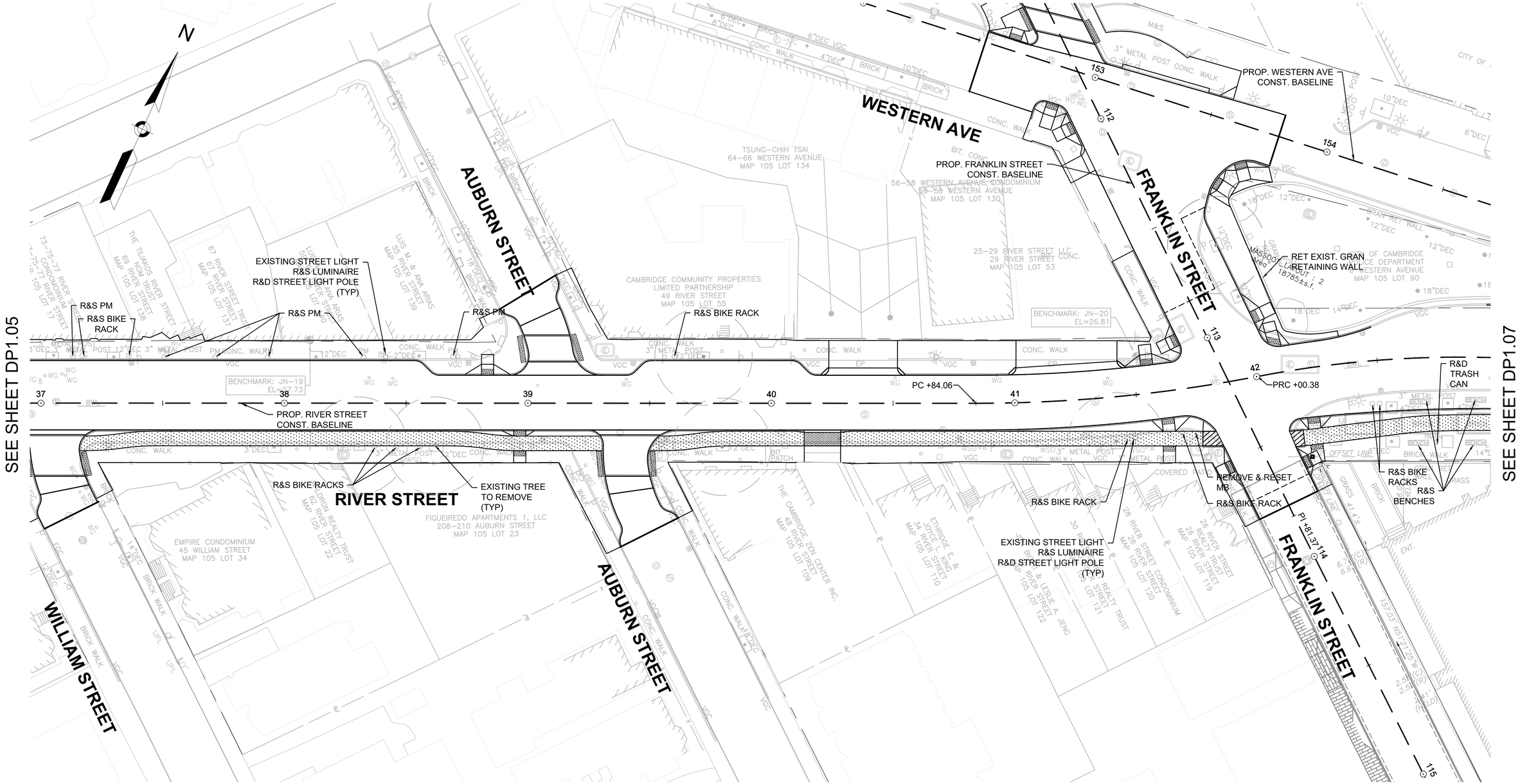

PLAN

0 20 50 100

SCALE: 1" = 20'

CONFORMED SET

HDR ENGINEERING, INC.
99 HIGH STREET, SUITE 2300
BOSTON, MASSACHUSETTS 02110-2378
(617) 357-7700

BSI ENGINEERING
CIVIL & SUBSURFACE UTILITY ENGINEERING
100 Hallet St
Boston, MA 02124
T: (617) 265 4200
F: (617) 209 1297
www.bsieng.com

FELDMAN LAND SURVEYORS
FELDMAN LAND SURVEYORS
152 HAMPDEN STREET
BOSTON, MASS. 02119
PHONE: (617)357-9740
www.feldmansurveyors.com

COMMONWEALTH OF MASSACHUSETTS HUGH J. NEENAN CIVIL No. 34694 REGISTERED PROFESSIONAL ENGINEER
Hugh J. Neenan
08-24-22

Scale			
Date			
Job No.			
Designed by			
Drawn by	0	CONFORMED SET	8/5/2022
Checked by	No.	Description	Date
Approved by		REVISIONS	

THE WORKS CAMBRIDGE DEPARTMENT OF PUBLIC

Client	CITY OF CAMBRIDGE, MA	Sheet DP1.06
Project	RIVER STREET INFRASTRUCTURE AND STREETSCAPE PROJECT	Total Sheets 381
Drawing	DISPOSITION PLANS - 6	File No.

File: C:\PWWORKING\EAST01\D0786396\7113XXX_(DISPOSITION PLANS).DWG Plotted: 8/22/2022 6:23:44 PM

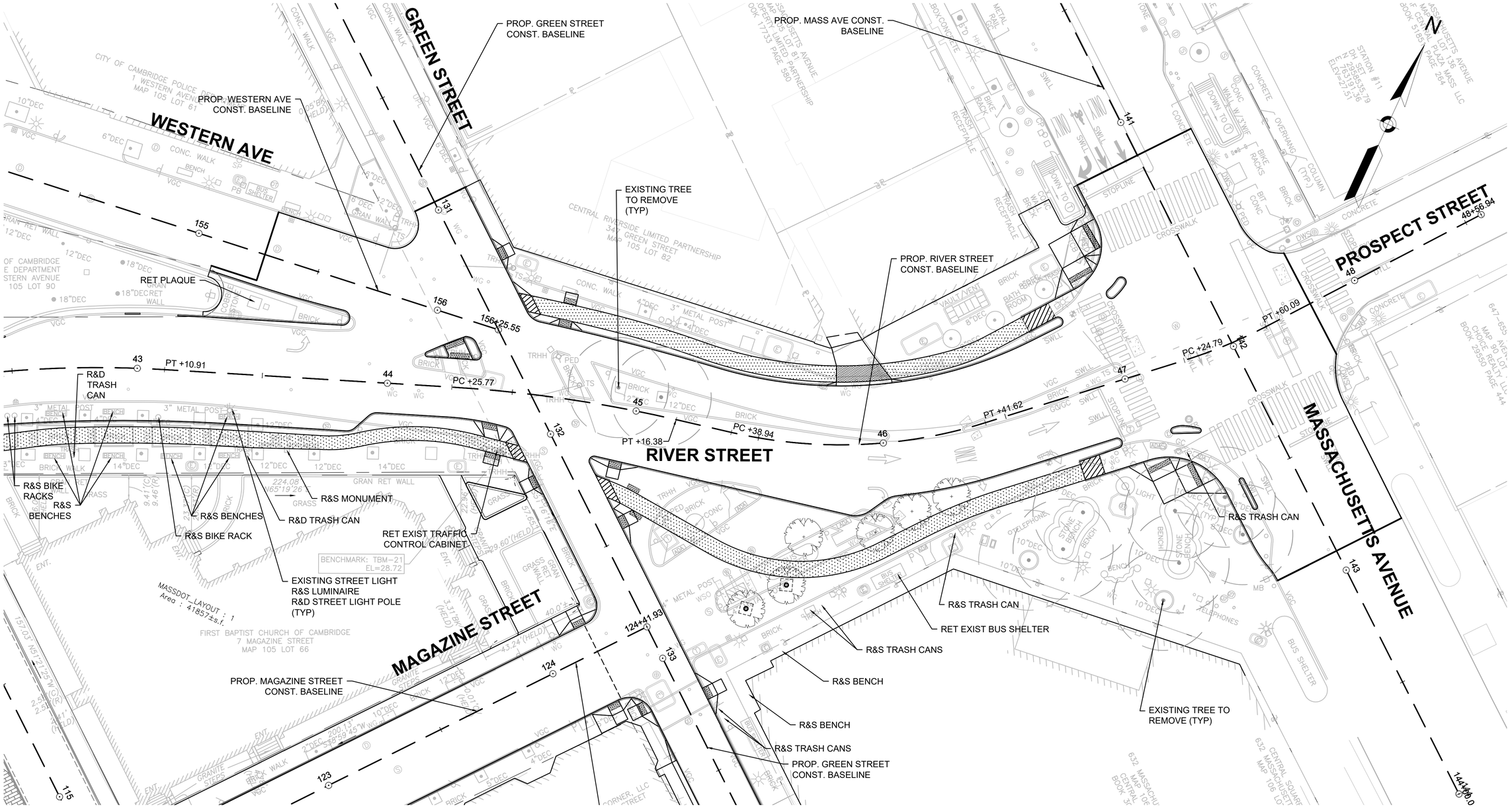

PLAN

0 20 50 100

SCALE: 1" = 20'

CONFORMED SET

HDR ENGINEERING, INC. 99 HIGH STREET, SUITE 2300 BOSTON, MASSACHUSETTS 02110-2378 (617) 357-7700	BSI ENGINEERING CIVIL & SUBSURFACE UTILITY ENGINEERING 100 Hallet St Boston, MA 02124 T: (617) 265 4200 F: (617) 209 1297 www.bsieng.com	FELDMAN LAND SURVEYORS FELDMAN LAND SURVEYORS 152 HAMPDEN STREET BOSTON, MASS. 02119 PHONE: (617)357-9740 www.feldmansurveyors.com	COMMONWEALTH OF MASSACHUSETTS HUGH J. NEENAN CIVIL No. 34694 REGISTERED PROFESSIONAL ENGINEER Hugh J. Neenan 08-24-22	

Scale			
Date			
Job No.			
Designed by			
Drawn by	0	CONFORMED SET	8/5/2022
Checked by	No.	Description	Date
Approved by	REVISIONS		

THE WORKS — CAMBRIDGE DEPARTMENT OF PUBLIC

Client	CITY OF CAMBRIDGE, MA	Sheet	DP1.07
Project	RIVER STREET INFRASTRUCTURE AND STREETSCAPE PROJECT	Total Sheets	381
Drawing	DISPOSITION PLANS - 7	File No.	

File: C:\PWWORKING\EAST01\D0786396\7113XXX_(DISPOSITION PLANS).DWG Plotted: 8/22/2022 6:23:56 PM

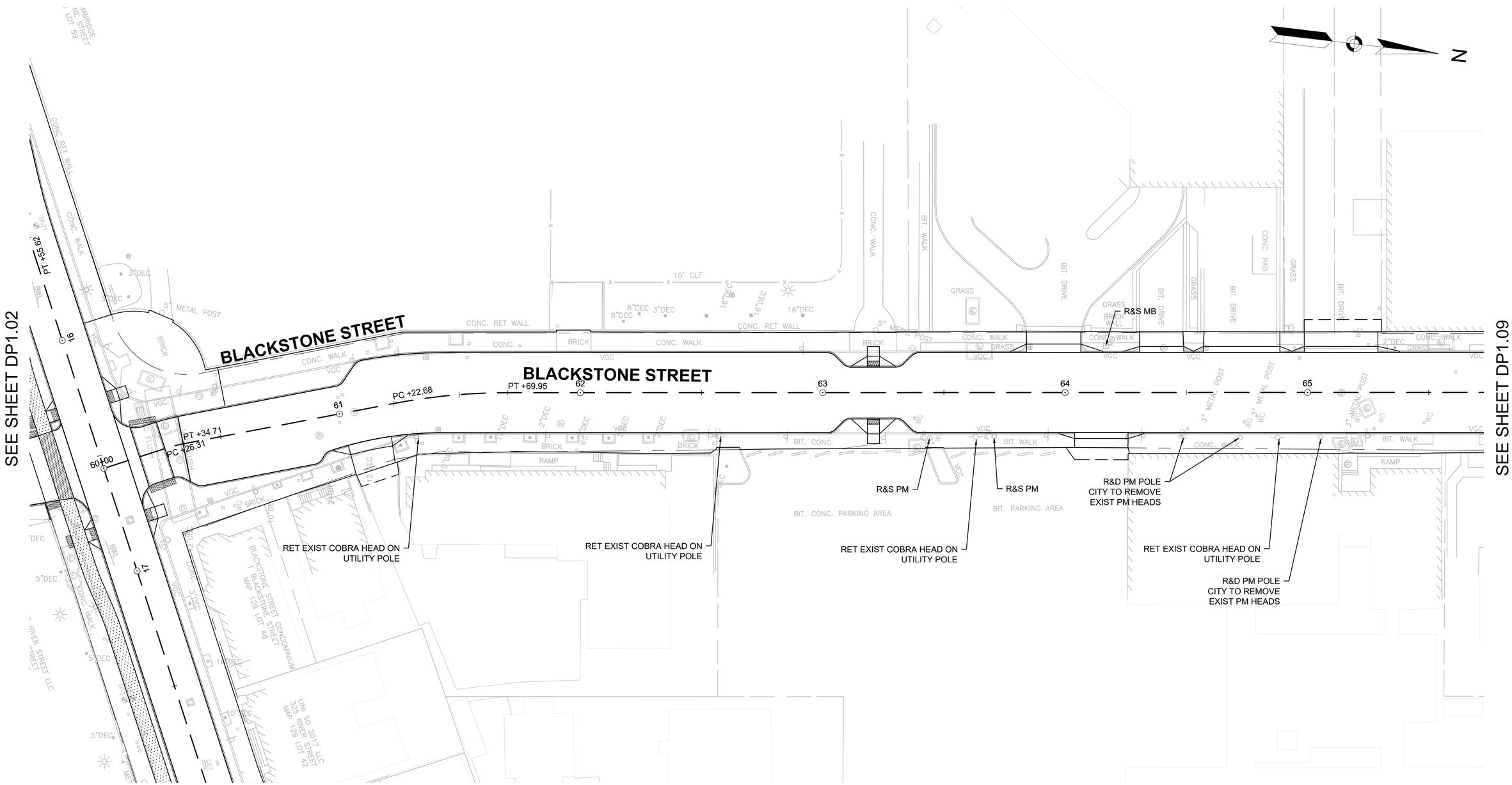

PLAN

0 20 50 100

SCALE: 1" = 20'

File: C:\PWWORKING\EAST01\D0786396\7113XXX_(DISPOSITION PLANS).DWG Plotted: 4/15/2022 2:41:26 PM

ISSUED FOR BID

HDR ENGINEERING, INC.
99 HIGH STREET, SUITE 2300
BOSTON, MASSACHUSETTS 02110-2378
(617) 357-7700

BSI ENGINEERING
CIVIL & SUBSURFACE UTILITY ENGINEERING
100 Hallet St
Boston, MA 02124
T: (617) 265 4200
F: (617) 209 1297
www.bsieng.com

FELDMAN LAND SURVEYORS
FELDMAN LAND SURVEYORS
152 HAMPDEN STREET
BOSTON, MASS. 02119
PHONE: (617)357-9740
www.feldmansurveyors.com

COMMONWEALTH OF MASSACHUSETTS
PHILIP FUSCO
CIVIL
No. 45868
REGISTERED PROFESSIONAL ENGINEER

Scale			
Date			
Job No.			
Designed by			
Drawn by			
Checked by	No.	Description	Date
Approved by	REVISIONS		

THE WORKS
CAMBRIDGE DEPARTMENT OF PUBLIC

Client	CITY OF CAMBRIDGE, MA
Project	RIVER STREET INFRASTRUCTURE AND STREETSCAPE PROJECT
Drawing	DISPOSITION PLANS - 8
Sheet	DP1.08
Total Sheets	381
File No.	

SEE SHEET DP1.08

BLACKSTONE STREET

CONC WALKWAY

GRASS

BRICK WALK

PLANTINGS

PROP. BLACKSTONE STREET
CONST. BASELINE

66 67 68 69 69+11.64

RET EXIST STREET LIGHT
MOUNTED TO EXIST UTILITY POLE

RET EXIST STREET LIGHT
MOUNTED TO EXIST UTILITY POLE

WESTERN AVENUE

N

PLAN

0 20 50 100

SCALE: 1" = 20'

ISSUED FOR BID

HDR ENGINEERING, INC.
99 HIGH STREET, SUITE 2300
BOSTON, MASSACHUSETTS 02110-2378
(617) 357-7700

BSI ENGINEERING
CIVIL & SUBSURFACE UTILITY ENGINEERING
100 Hallet St
Boston, MA 02124
T: (617) 265 4200
F: (617) 209 1297
www.bsieng.com

FELDMAN LAND SURVEYORS
FELDMAN LAND SURVEYORS
152 HAMPDEN STREET
BOSTON, MASS. 02119
PHONE: (617)357-9740
www.feldmansurveyors.com

COMMONWEALTH OF MASSACHUSETTS
PHILIP FUSCO
CIVIL
No. 45868
REGISTERED PROFESSIONAL ENGINEER

Scale			
Date			
Job No.			
Designed by			
Drawn by			
Checked by	No.	Description	Date
Approved by	REVISIONS		

THE WORKS — CAMBRIDGE DEPARTMENT OF PUBLIC

Client: CITY OF CAMBRIDGE, MA	Sheet: DP1.09
Project: RIVER STREET INFRASTRUCTURE AND STREETSCAPE PROJECT	Total Sheets: 381
Drawing: **DISPOSITION PLANS - 9**	File No.

File: C:\PW\WORKING\EAST01\D0786396\7113XXX_(DISPOSITION PLANS).DWG Plotted: 4/15/2022 2:41:36 PM

SEE SHEET DP1.07

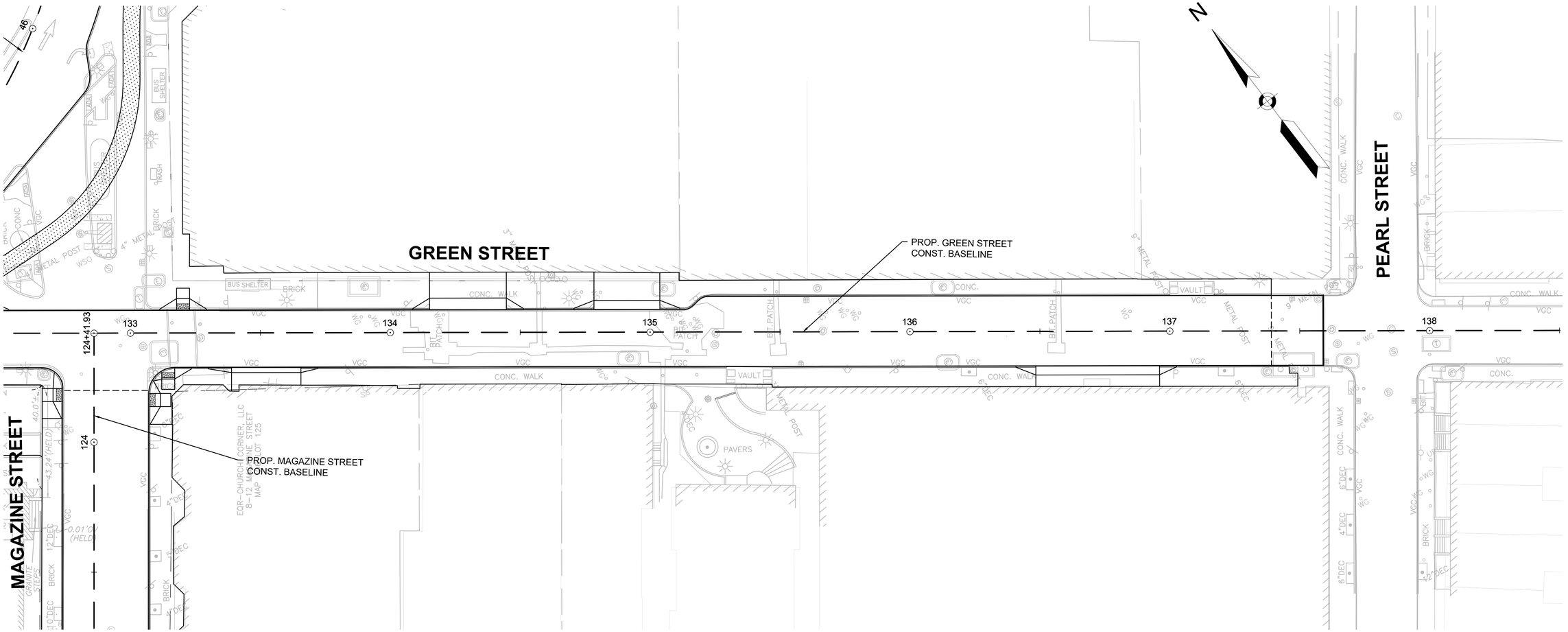

SEE SHEET DP1.11

PLAN

0 20 50 100

SCALE: 1" = 20'

ISSUED FOR BID

HDR ENGINEERING, INC.
99 HIGH STREET, SUITE 2300
BOSTON, MASSACHUSETTS 02110-2378
(617) 357-7700

BSI ENGINEERING
CIVIL & SUBSURFACE UTILITY ENGINEERING
100 Hallet St
Boston, MA 02124
T: (617) 265 4200
F: (617) 209 1297
www.bsieng.com

FELDMAN LAND SURVEYORS
FELDMAN LAND SURVEYORS
152 HAMPDEN STREET
BOSTON, MASS. 02119
PHONE: (617)357-9740
www.feldmansurveyors.com

COMMONWEALTH OF MASSACHUSETTS
PHILIP FUSCO
CIVIL
No. 45868
REGISTERED PROFESSIONAL ENGINEER

Scale			
Date			
Job No.			
Designed by			
Drawn by			
Checked by	No.	Description	Date
Approved by	REVISIONS		

THE WORKS — CAMBRIDGE DEPARTMENT OF PUBLIC WORKS

Client	CITY OF CAMBRIDGE, MA
Project	RIVER STREET INFRASTRUCTURE AND STREETSCAPE PROJECT
Drawing	**DISPOSITION PLANS - 10**
Sheet	DP1.10
Total Sheets	381
File No.	

File: C:\PWWORKING\EAST01\D07863961\7113XXX_(DISPOSITION PLANS).DWG Plotted: 4/15/2022 2:41:46 PM

SEE SHEET DP1.10

SEE SHEET DP1.07

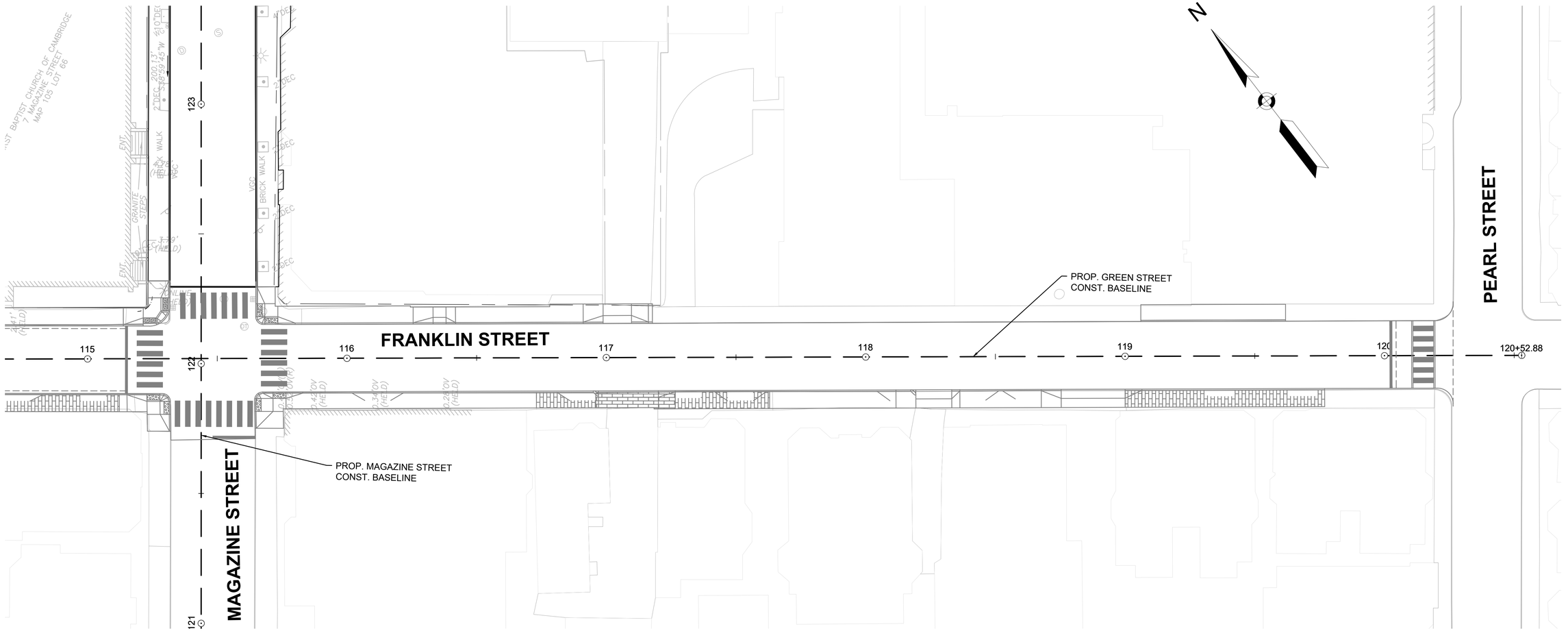

PLAN

0 20 50 100

SCALE: 1" = 20'

ISSUED FOR BID

HDR ENGINEERING, INC.
99 HIGH STREET, SUITE 2300
BOSTON, MASSACHUSETTS 02110–2378
(617) 357–7700

BSI ENGINEERING
CIVIL & SUBSURFACE UTILITY ENGINEERING
100 Hallet St
Boston, MA 02124
T: (617) 265 4200
F: (617) 209 1297
www.bsieng.com

FELDMAN LAND SURVEYORS
FELDMAN LAND SURVEYORS
152 HAMPDEN STREET
BOSTON, MASS. 02119
PHONE: (617)357-9740
www.feldmansurveyors.com

COMMONWEALTH OF MASSACHUSETTS
PHILIP FUSCO
CIVIL
No. 45868
REGISTERED PROFESSIONAL ENGINEER

Scale			
Date			
Job No.			
Designed by			
Drawn by			
Checked by	No.	Description	Date
Approved by	REVISIONS		

THE WORKS — CAMBRIDGE DEPARTMENT OF PUBLIC WORKS

Client	CITY OF CAMBRIDGE, MA	Sheet	DP1.11
Project	RIVER STREET INFRASTRUCTURE AND STREETSCAPE PROJECT	Total Sheets	381
Drawing	**DISPOSITION PLANS - 11**	File No.	

File: C:\PWWORKING\EAST01\D07863961713XXX_(DISPOSITION PLANS).DWG Plotted: 4/15/2022 2:41:56 PM

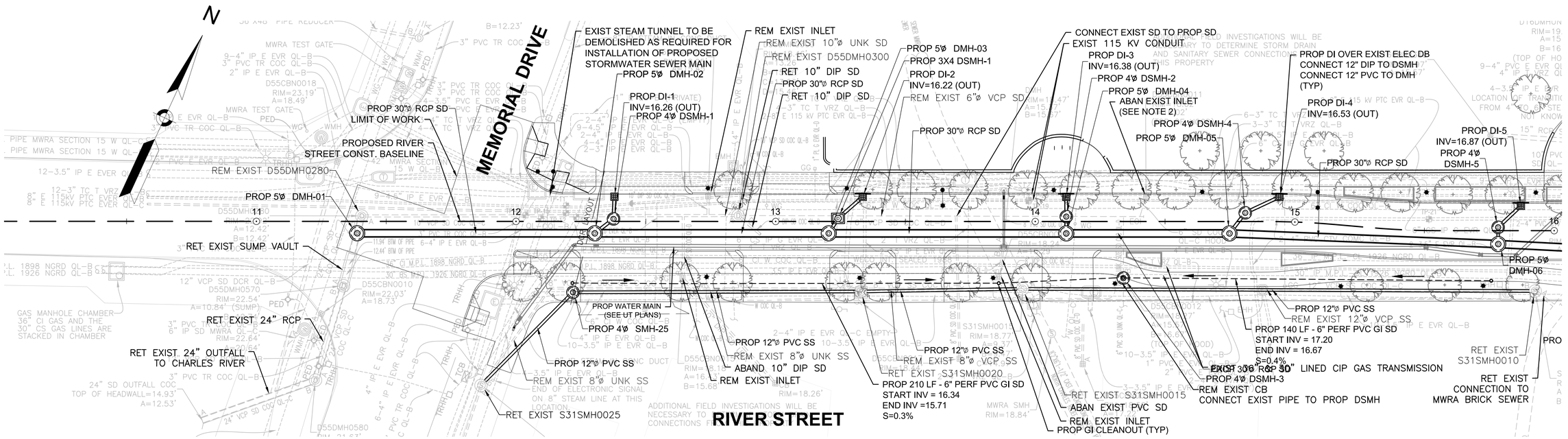

HELICAL PIER FOUNDATION SYSTEM TO BE INSTALLED FOR NEW DRAIN AND SEWER ONLY. SLIP LINING OF EXISTING PIPE WILL NOT RECEIVE HELICAL PIER INSTALL. SEE DETAILS ON SHEET CD-1.02.

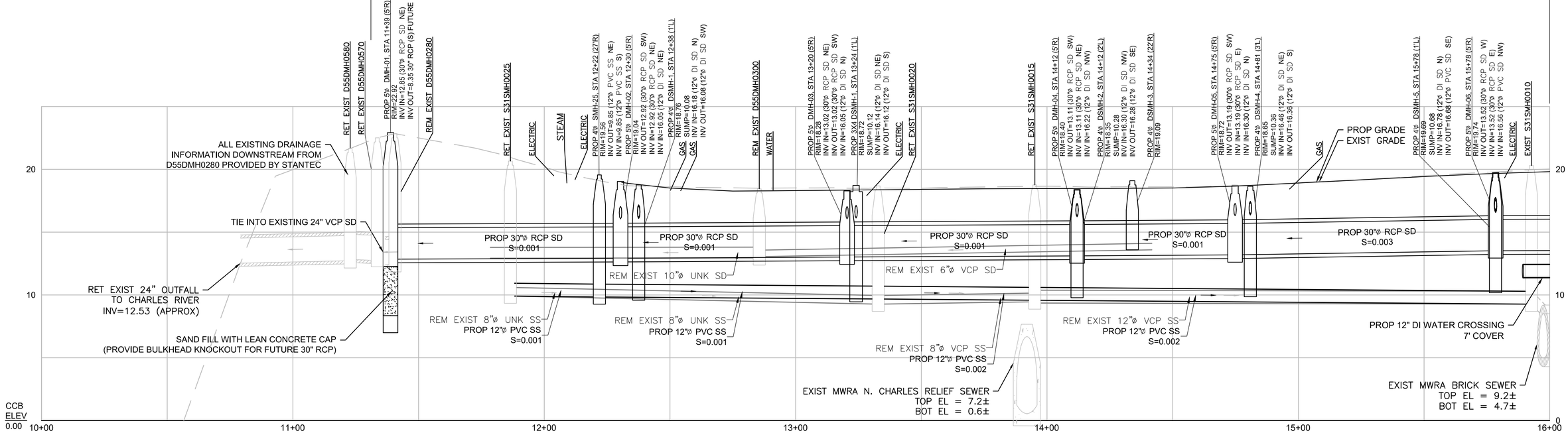

HOR. SCALE IN FEET
20 0 20 40
VER. SCALE IN FEET
4 0 4 8

PLAN AND PROFILE - RIVER STREET

NOTE:
1. SEE SHEET CD1.06 FOR DRAINAGE INLET SCHEDULE.
2. THE CONTRACTOR SHALL TAKE ALL NECESSARY AND REQUIRED PRECAUTIONS TO PROTECT THE EXISTING ELECTRICAL UTILITY SERVICE (AS SHOWN ON THIS PLAN) DURING STRUCTURE ABANDONMENT. THE CONTRACTOR SHALL BACKFILL THIS STRUCTURE AS SPECIFIED IN THE SPECIFICATIONS AND AS APPROVED BY THE ENGINEER.

ISSUED FOR BID

HDR ENGINEERING, INC.
99 HIGH STREET, SUITE 2300
BOSTON, MASSACHUSETTS 02110-2378
(617) 357-7700

COMMONWEALTH OF MASSACHUSETTS
HUGH J. NEENAN
CIVIL
No. 34694
REGISTERED PROFESSIONAL ENGINEER
Hugh J. Neenan
05-02-22

Scale			
Date			
Job No.			
Designed by			
Drawn by			
Checked by	No.	Description	Date
Approved by	REVISIONS		

THE WORKS — CAMBRIDGE DEPARTMENT OF PUBLIC WORKS

Client	CITY OF CAMBRIDGE, MA
Project	RIVER STREET INFRASTRUCTURE AND STREETSCAPE PROJECT
Drawing	**CIVIL CONSTRUCTION PLAN AND PROFILE - 1**
Sheet	C1.01
Total Sheets	381
File No.	

File: C:\PWWORKING\EAST01\D0786396\I7113XXX_(CIVIL CONSTRUCTION PLAN PROFILE).DWG Plotted: 5/2/2022 3:02:45 PM

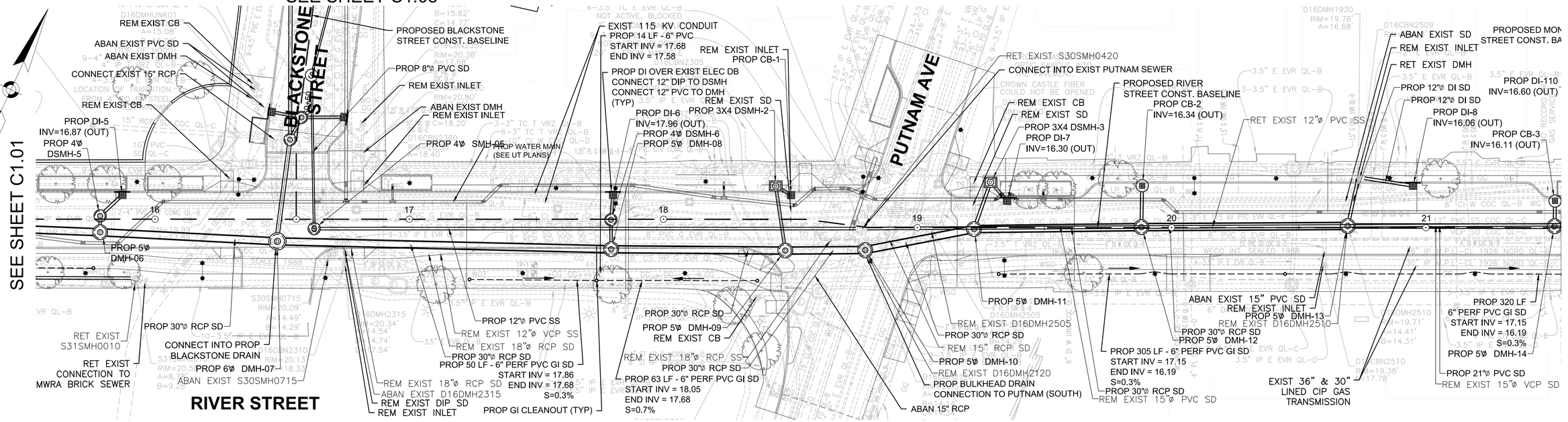

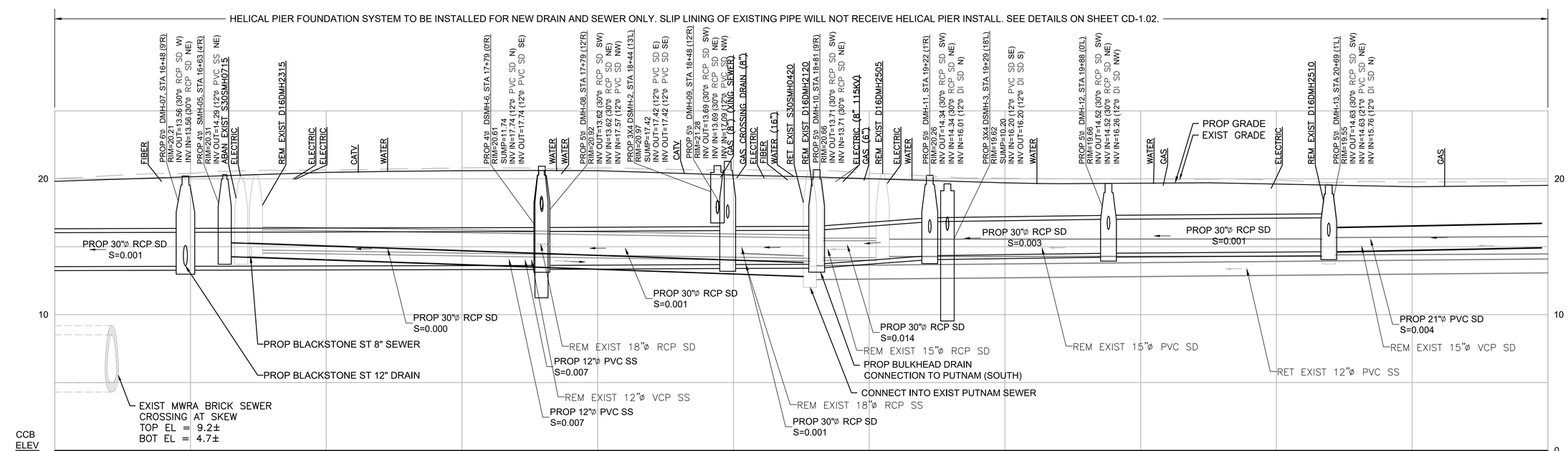

PLAN AND PROFILE - RIVER STREET

HOR. SCALE IN FEET
20 0 20 40
VER. SCALE IN FEET
4 0 4 8

NOTE:
1. SEE SHEET CD1.06 FOR DRAINAGE INLET SCHEDULE.
2. NO CASTINGS TO BE PLACED WITHIN LIMITS OF PROPOSED BLUE BIKE STATION.

ISSUED FOR BID

HDR ENGINEERING, INC.
99 HIGH STREET, SUITE 2300
BOSTON, MASSACHUSETTS 02110-2378
(617) 357-7700

HUGH J. NEENAN CIVIL No. 34694 REGISTERED PROFESSIONAL ENGINEER COMMONWEALTH OF MASSACHUSETTS
Hugh J. Neenan
05-02-22

Scale			
Date			
Job No.			
Designed by			
Drawn by			
Checked by	No.	Description	Date
Approved by	REVISIONS		

THE WORKS — CAMBRIDGE DEPARTMENT OF PUBLIC

Client	CITY OF CAMBRIDGE, MA	Sheet	C1.02
Project	RIVER STREET INFRASTRUCTURE AND STREETSCAPE PROJECT	Total Sheets	381
Drawing	**CIVIL CONSTRUCTION PLAN AND PROFILE - 2**	File No.	

File: C:\PWWORKING\EAST01\D0786396\7113XXX_(CIVIL CONSTRUCTION PLAN PROFILE).DWG Plotted: 5/2/2022 3:03:06 PM

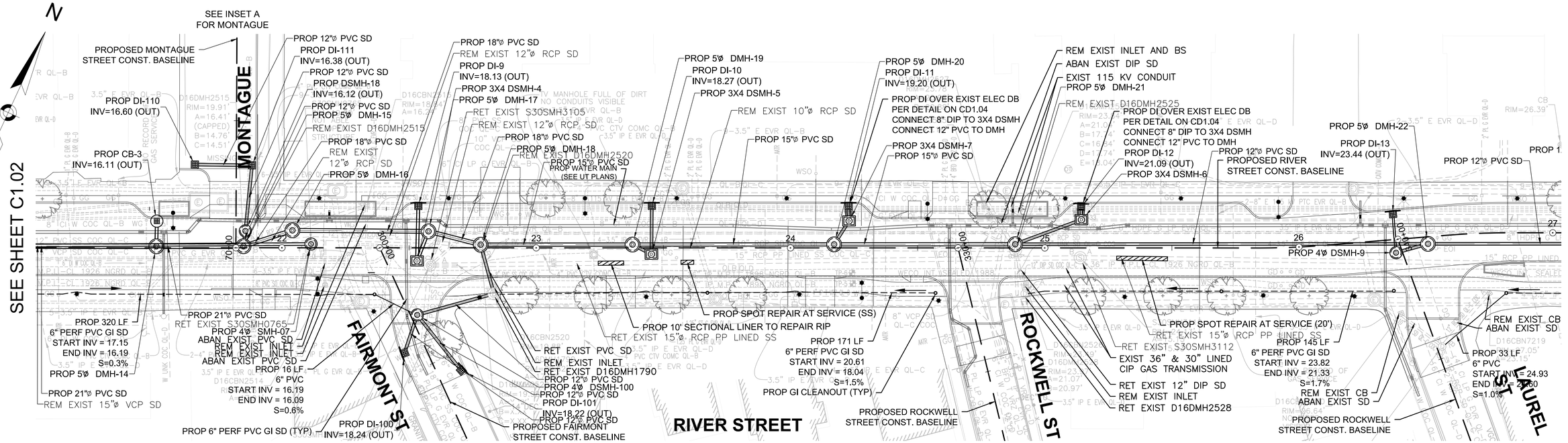

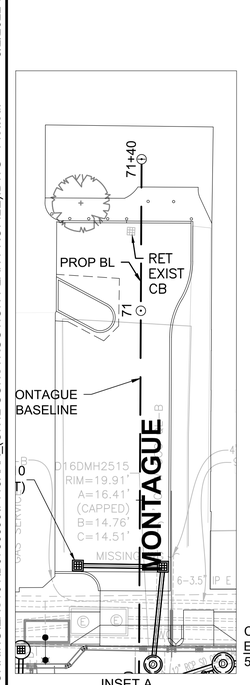

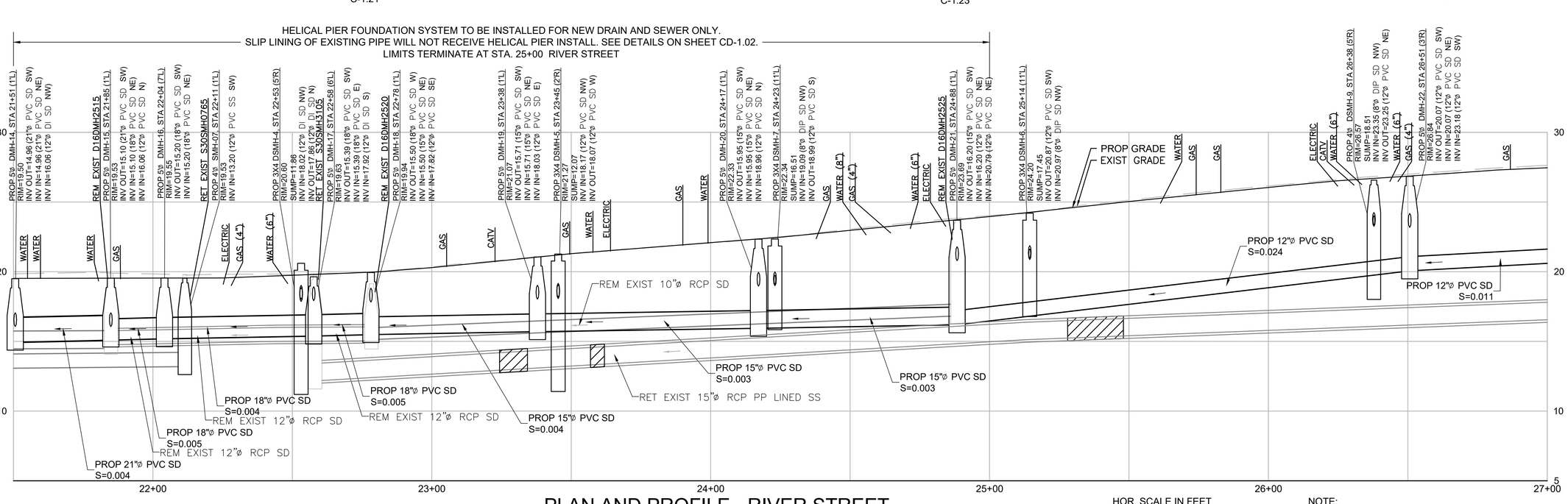

PLAN AND PROFILE - RIVER STREET

HOR. SCALE IN FEET
20 0 20 40
VER. SCALE IN FEET
4 0 4 8

NOTE:
1. SEE SHEET CD1.06 FOR DRAINAGE INLET SCHEDULE.

ISSUED FOR BID

HDR ENGINEERING, INC.
99 HIGH STREET, SUITE 2300
BOSTON, MASSACHUSETTS 02110-2378
(617) 357-7700

COMMONWEALTH OF MASSACHUSETTS
HUGH J. NEENAN
CIVIL
No. 34694
REGISTERED PROFESSIONAL ENGINEER
Hugh J. Neenan
05-02-22

Scale			
Date			
Job No.			
Designed by			
Drawn by			
Checked by	No.	Description	Date
Approved by	REVISIONS		

THE WORKS — CAMBRIDGE DEPARTMENT OF PUBLIC WORKS

Client	CITY OF CAMBRIDGE, MA
Project	RIVER STREET INFRASTRUCTURE AND STREETSCAPE PROJECT
Drawing	CIVIL CONSTRUCTION PLAN AND PROFILE - 3
Sheet	C1.03
Total Sheets	381
File No.	

5/2/2022 3:03:59 PM
File: C:\PWWORKING\EAST\D1\D0786396\I7113XXX_(CIVIL CONSTRUCTION PLAN PROFILE).DWG Plotted: 5/2/2022

SEE SHEET C1.03

SEE SHEET C1.05

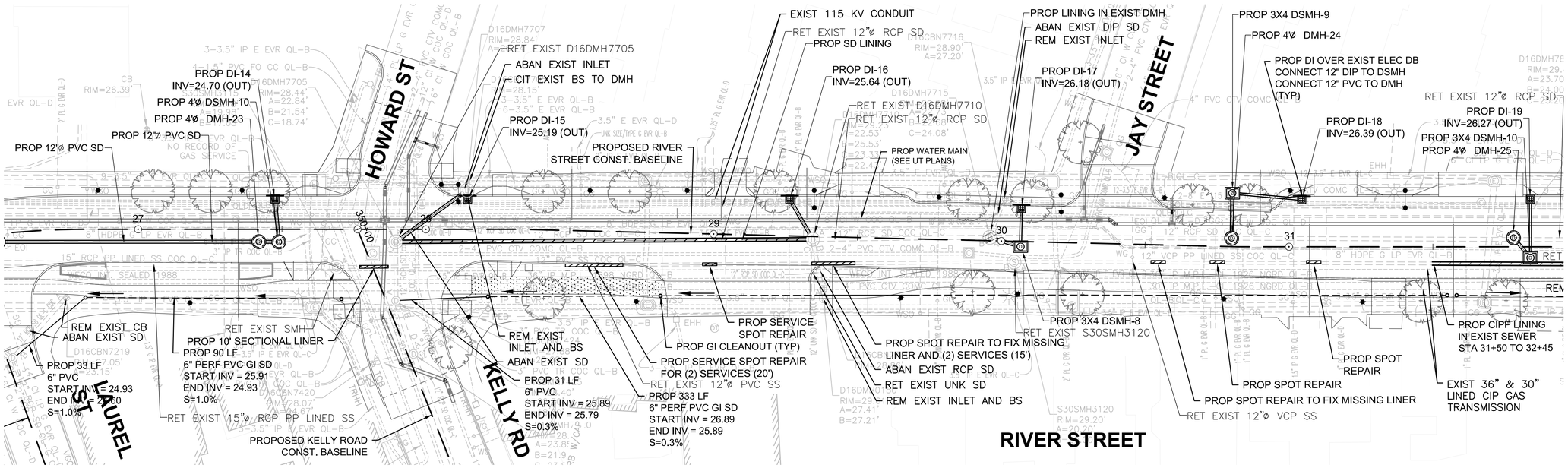

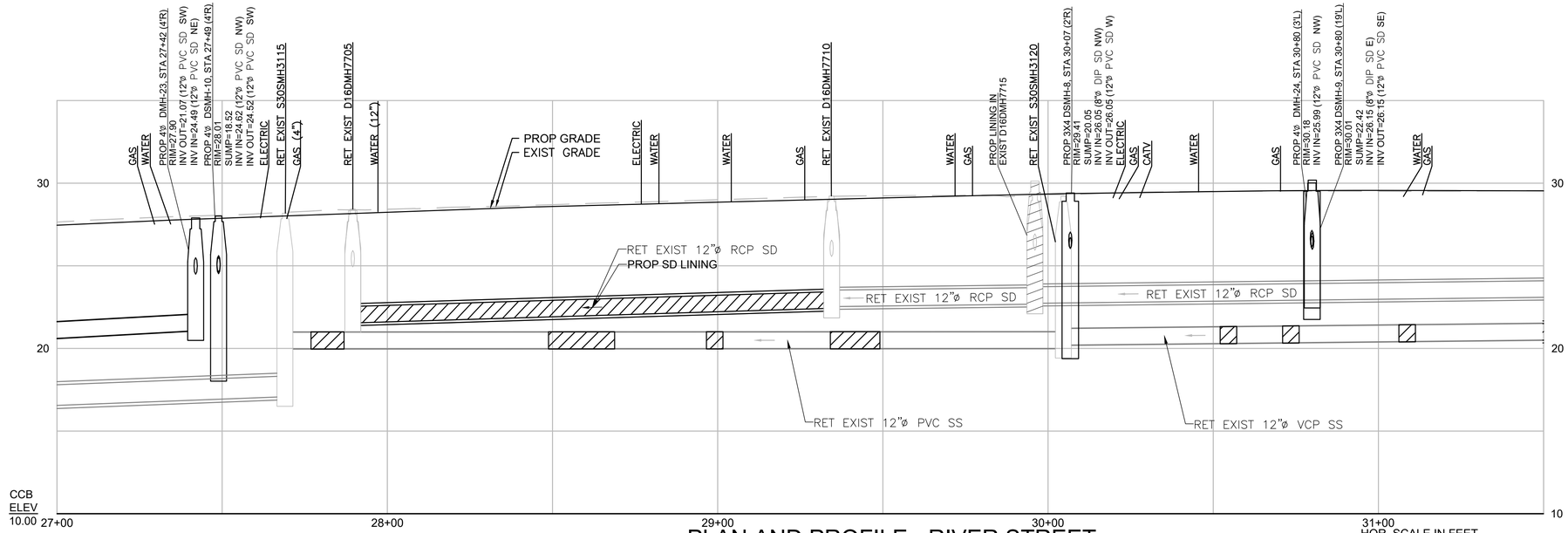

PLAN AND PROFILE - RIVER STREET

HOR. SCALE IN FEET
20 0 20 40
VER. SCALE IN FEET
4 0 4 8

NOTE:
1. SEE SHEET CD1.06 FOR DRAINAGE INLET SCHEDULE.

ISSUED FOR BID

HDR ENGINEERING, INC.
99 HIGH STREET, SUITE 2300
BOSTON, MASSACHUSETTS 02110-2378
(617) 357-7700

COMMONWEALTH OF MASSACHUSETTS
HUGH J. NEENAN
CIVIL
No. 34694
REGISTERED PROFESSIONAL ENGINEER
Hugh J. Neenan
05-02-22

Scale			
Date			
Job No.			
Designed by			
Drawn by			
Checked by	No.	Description	Date
Approved by	REVISIONS		

CAMBRIDGE DEPARTMENT OF PUBLIC WORKS

Client	CITY OF CAMBRIDGE, MA	Sheet	C1.04
Project	RIVER STREET INFRASTRUCTURE AND STREETSCAPE PROJECT	Total Sheets	381
Drawing	**CIVIL CONSTRUCTION PLAN AND PROFILE - 4**	File No.	

File: C:\PW\WORKING\EAST01\D0786396\7113XXX_(CIVIL CONSTRUCTION PLAN PROFILE).DWG Plotted: 5/2/2022 3:03:27 PM

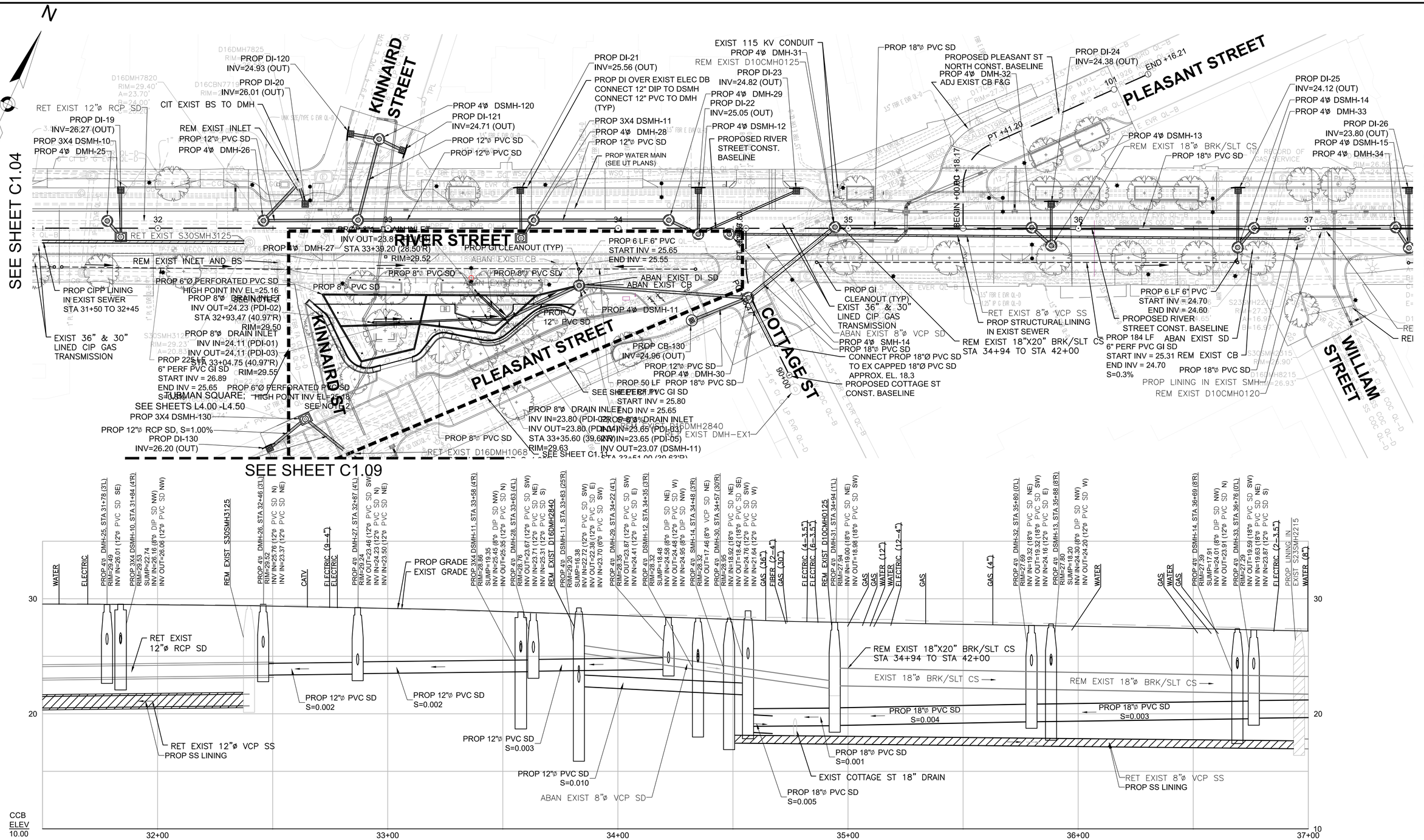

PLAN AND PROFILE - RIVER STREET

HOR. SCALE IN FEET
20 0 20 40
VER. SCALE IN FEET
4 0 4 8

NOTE:
1. SEE SHEET CD1.06 FOR DRAINAGE INLET SCHEDULE.

ISSUED FOR BID

5/2/2022 3:04:19 PM

File: C:\PWWORKING\EAST01\D0786396\7113XXX_(CIVIL CONSTRUCTION PLAN PROFILE).DWG Plotted:

HDR ENGINEERING, INC.
99 HIGH STREET, SUITE 2300
BOSTON, MASSACHUSETTS 02110-2378
(617) 357-7700

COMMONWEALTH OF MASSACHUSETTS
HUGH J. NEENAN
CIVIL
No. 34694
REGISTERED PROFESSIONAL ENGINEER
Hugh J. Neenan
05-02-22

Scale			
Date			
Job No.			
Designed by			
Drawn by			
Checked by	No.	Description	Date
Approved by	REVISIONS		

THE WORKS — CAMBRIDGE DEPARTMENT OF PUBLIC WORKS

Client: CITY OF CAMBRIDGE, MA	Sheet: C1.05
Project: RIVER STREET INFRASTRUCTURE AND STREETSCAPE PROJECT	Total Sheets: 381
Drawing: **CIVIL CONSTRUCTION PLAN AND PROFILE - 5**	File No.

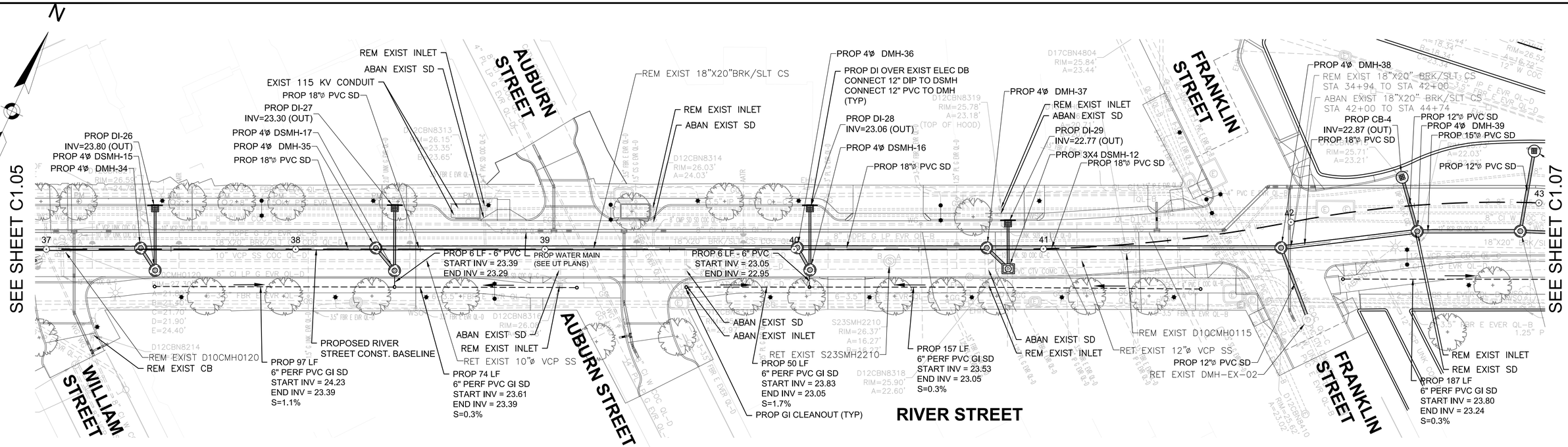

PLAN AND PROFILE - RIVER STREET

HOR. SCALE IN FEET
20 0 20 40
VER. SCALE IN FEET
4 0 4 8

NOTE:
1. SEE SHEET CD1.06 FOR DRAINAGE INLET SCHEDULE.

ISSUED FOR BID

HDR ENGINEERING, INC.
99 HIGH STREET, SUITE 2300
BOSTON, MASSACHUSETTS 02110-2378
(617) 357-7700

HUGH J. NEENAN CIVIL No. 34694 REGISTERED PROFESSIONAL ENGINEER COMMONWEALTH OF MASSACHUSETTS
Hugh J. Neenan
05-02-22

Scale			
Date			
Job No.			
Designed by			
Drawn by			
Checked by	No.	Description	Date
Approved by	REVISIONS		

THE WORKS — CAMBRIDGE DEPARTMENT OF PUBLIC WORKS

Client	CITY OF CAMBRIDGE, MA	Sheet	C1.06
Project	RIVER STREET INFRASTRUCTURE AND STREETSCAPE PROJECT	Total Sheets	381
Drawing	**CIVIL CONSTRUCTION PLAN AND PROFILE - 6**	File No.	

File: C:\PWWORKING\EAST01\D0786396\7113XXX_(CIVIL CONSTRUCTION PLAN PROFILE).DWG Plotted: 5/2/2022 3:04:39 PM

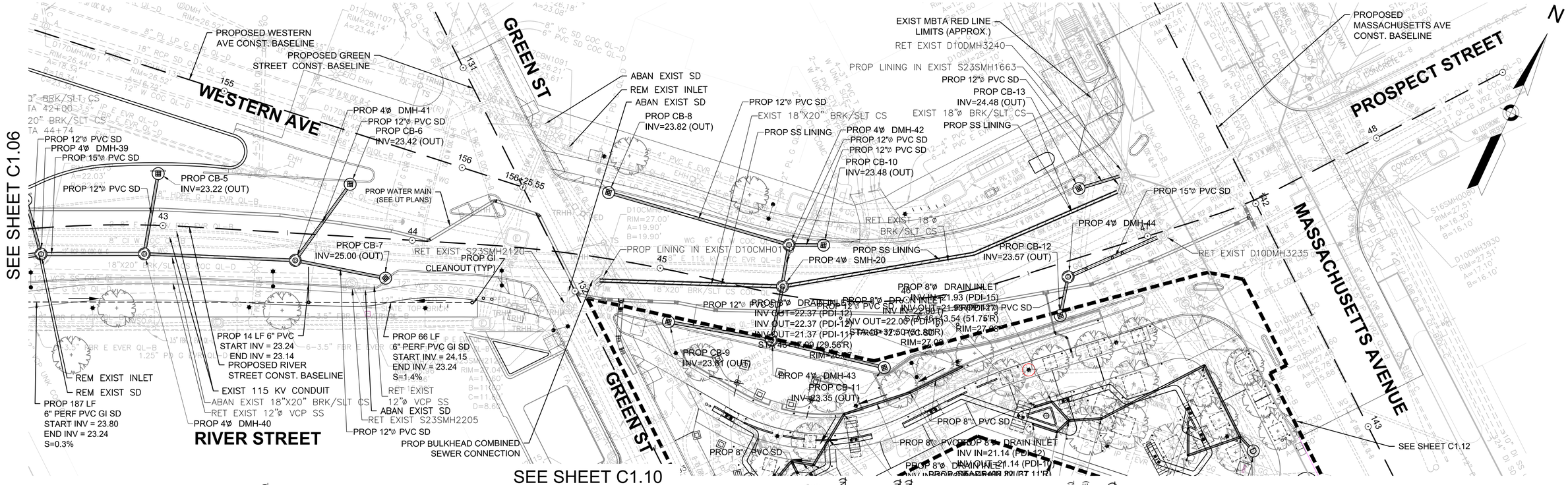

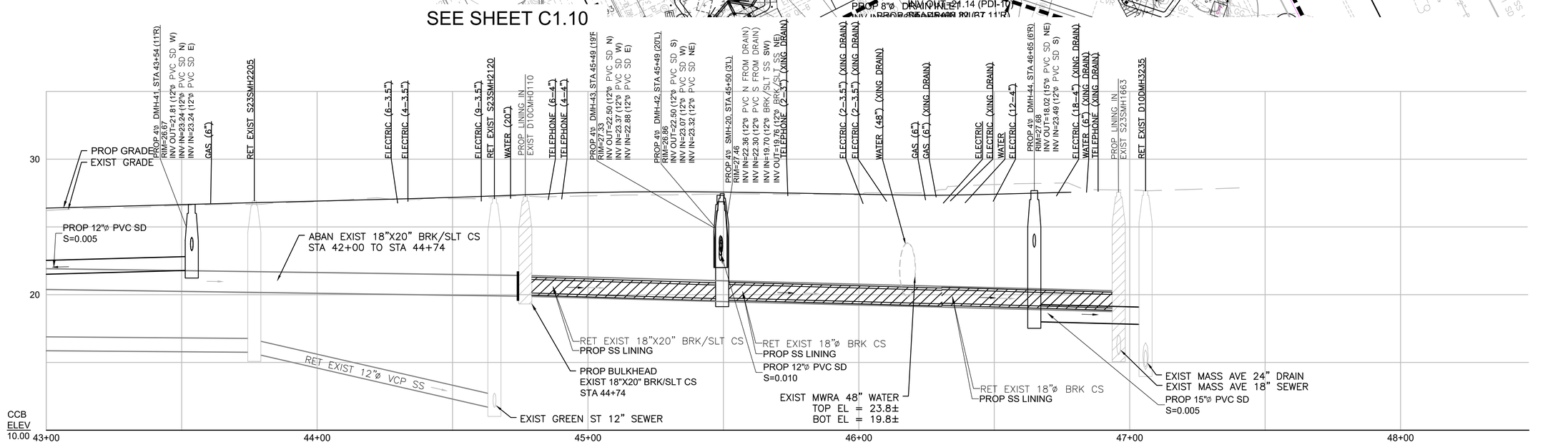

PLAN AND PROFILE - RIVER STREET

HOR. SCALE IN FEET
20 0 20 40
VER. SCALE IN FEET
4 0 4 8

NOTE:
1. SEE SHEET CD1.06 FOR DRAINAGE INLET SCHEDULE.

ISSUED FOR BID

HDR ENGINEERING, INC.
99 HIGH STREET, SUITE 2300
BOSTON, MASSACHUSETTS 02110-2378
(617) 357-7700

COMMONWEALTH OF MASSACHUSETTS
HUGH J. NEENAN
CIVIL
No. 34694
REGISTERED PROFESSIONAL ENGINEER
Hugh J. Neenan
05-02-22

Scale			
Date			
Job No.			
Designed by			
Drawn by			
Checked by	No.	Description	Date
Approved by	REVISIONS		

THE WORKS — CAMBRIDGE DEPARTMENT OF PUBLIC WORKS

Client: CITY OF CAMBRIDGE, MA	Sheet: C1.07
Project: RIVER STREET INFRASTRUCTURE AND STREETSCAPE PROJECT	Total Sheets: 381
Drawing: **CIVIL CONSTRUCTION PLAN AND PROFILE - 7**	File No.

File: C:\PWWORKING\EAST01\D0786396\I7113XXX_(CIVIL CONSTRUCTION PLAN PROFILE).DWG Plotted: 5/2/2022 3:04:58 PM

SEE SHEET C1.02

SEE SHEET C1.09

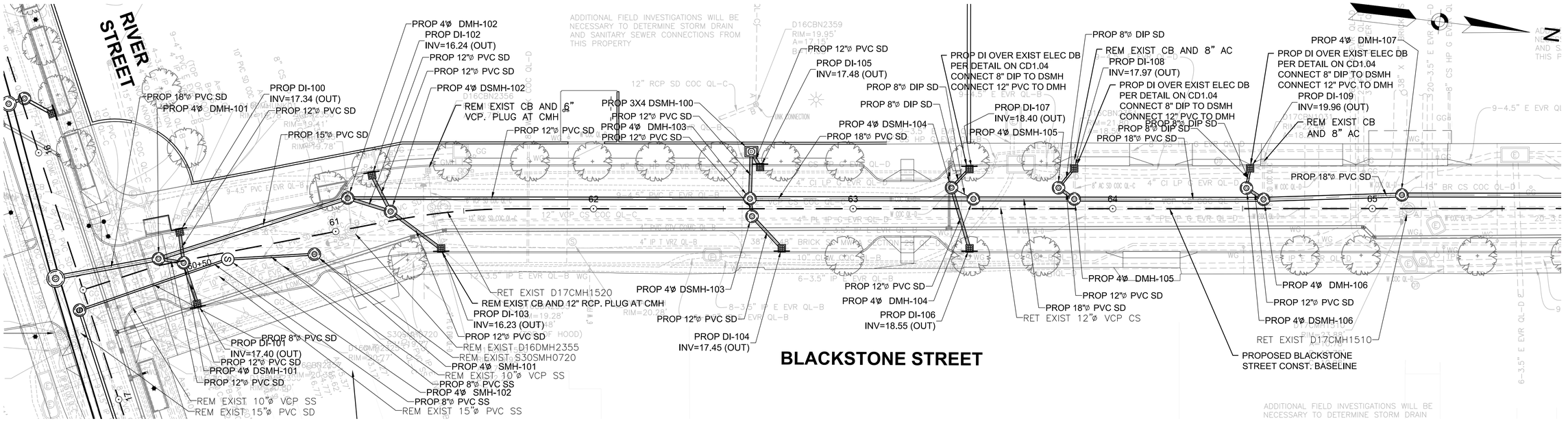

HELICAL PIER FOUNDATION SYSTEM TO BE INSTALLED FOR NEW DRAIN AND SEWER ONLY. SLIP LINING OF EXISTING PIPE WILL NOT RECEIVE HELICAL PIER INSTALL. SEE DETAILS ON SHEET CD-1.02.

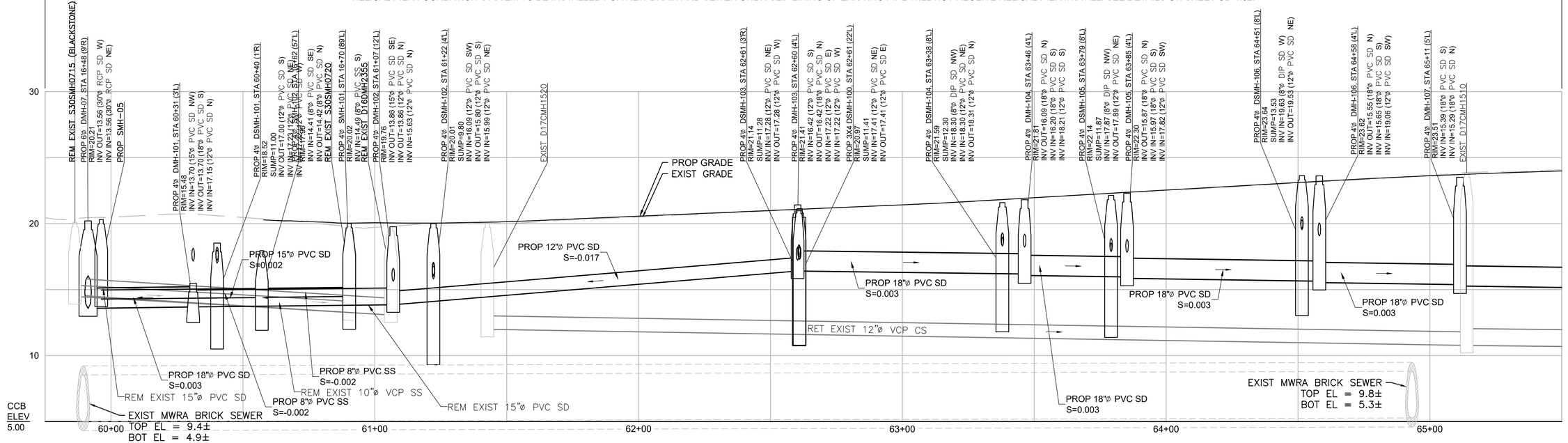

PLAN AND PROFILE - BLACKSTONE STREET

HOR. SCALE IN FEET
20 0 20 40
VER. SCALE IN FEET
4 0 4 8

NOTE:
1. SEE SHEET CD1.06 FOR DRAINAGE INLET SCHEDULE.

ISSUED FOR BID

HDR ENGINEERING, INC.
99 HIGH STREET, SUITE 2300
BOSTON, MASSACHUSETTS 02110-2378
(617) 357-7700

COMMONWEALTH OF MASSACHUSETTS
HUGH J. NEENAN
CIVIL
No. 34694
REGISTERED PROFESSIONAL ENGINEER
Hugh J. Neenan
05-02-22

Scale			
Date			
Job No.			
Designed by			
Drawn by			
Checked by	No.	Description	Date
Approved by		REVISIONS	

CAMBRIDGE DEPARTMENT OF PUBLIC WORKS

Client: CITY OF CAMBRIDGE, MA	Sheet: C1.08
Project: RIVER STREET INFRASTRUCTURE AND STREETSCAPE PROJECT	Total Sheets: 381
Drawing: CIVIL CONSTRUCTION PLAN AND PROFILE - 8	File No.

File: C:\PWWORKING\EAST\01\D0786396\7113XXX_(CIVIL CONSTRUCTION PLAN PROFILE).DWG Plotted: 5/2/2022 3:05:18 PM

SEE SHEET C1.08

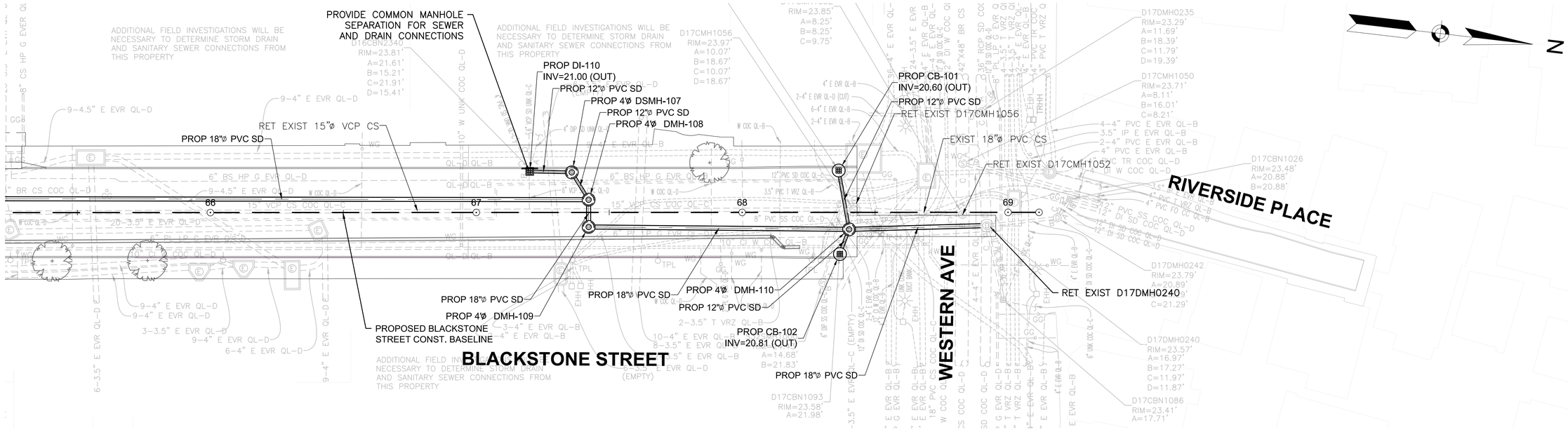

SEE SHEET C1.05

HELICAL PIER FOUNDATION SYSTEM TO BE INSTALLED FOR NEW DRAIN AND SEWER ONLY. SLIP LINING OF EXISTING PIPE WILL NOT RECEIVE HELICAL PIER INSTALL. SEE DETAILS ON SHEET CD-1.02.

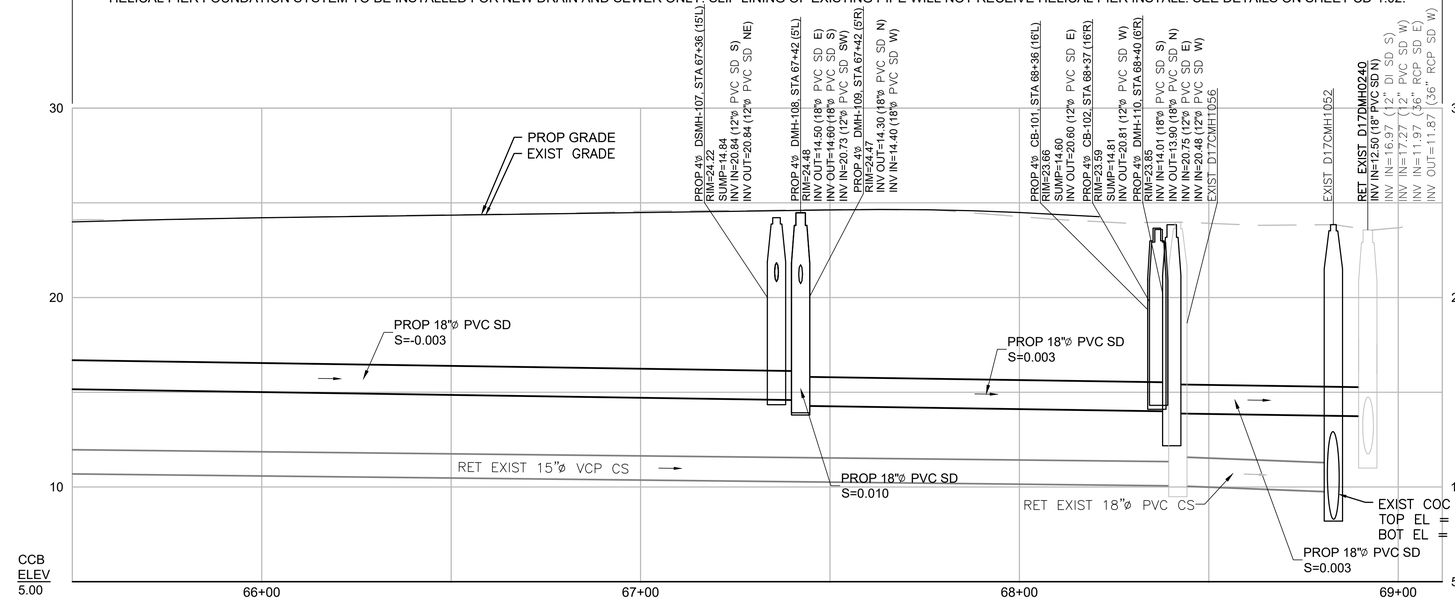

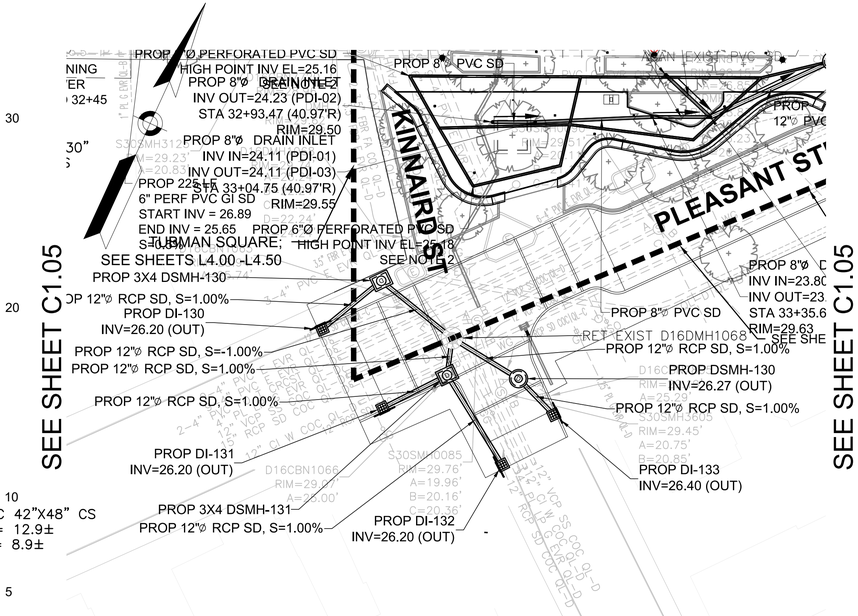

SEE SHEET C1.05

PLAN AND PROFILE - BLACKSTONE STREET

HOR. SCALE IN FEET
20 0 20 40
VER. SCALE IN FEET
4 0 4 8

NOTE:
1. SEE SHEET CD1.06 FOR DRAINAGE INLET SCHEDULE.

ISSUED FOR BID

HDR ENGINEERING, INC.
99 HIGH STREET, SUITE 2300
BOSTON, MASSACHUSETTS 02110-2378
(617) 357-7700

HUGH J. NEENAN CIVIL No. 34694 REGISTERED PROFESSIONAL ENGINEER
COMMONWEALTH OF MASSACHUSETTS
Hugh J. Neenan
05-02-22

Scale			
Date			
Job No.			
Designed by			
Drawn by			
Checked by	No.	Description	Date
Approved by	REVISIONS		

THE WORKS — CAMBRIDGE DEPARTMENT OF PUBLIC WORKS

Client	CITY OF CAMBRIDGE, MA
Project	RIVER STREET INFRASTRUCTURE AND STREETSCAPE PROJECT
Drawing	CIVIL CONSTRUCTION PLAN AND PROFILE - 9
Sheet	C1.09
Total Sheets	381
File No.	

File: C:\PWWORKING\EAST\D1D0786396\I7113XXX_(CIVIL CONSTRUCTION PLAN PROFILE).DWG Plotted: 5/2/2022 3:05:48 PM

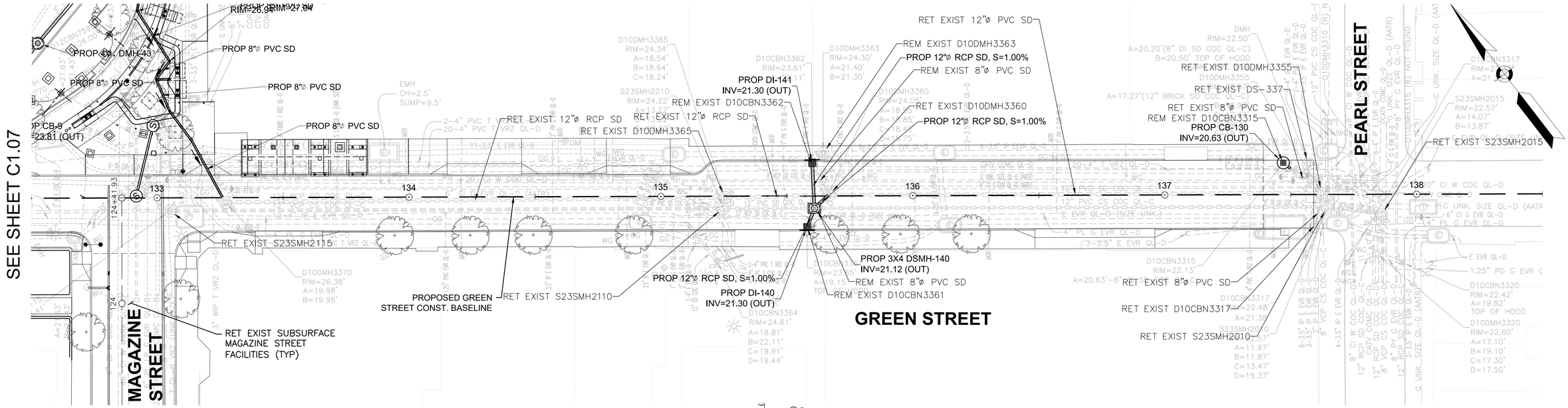

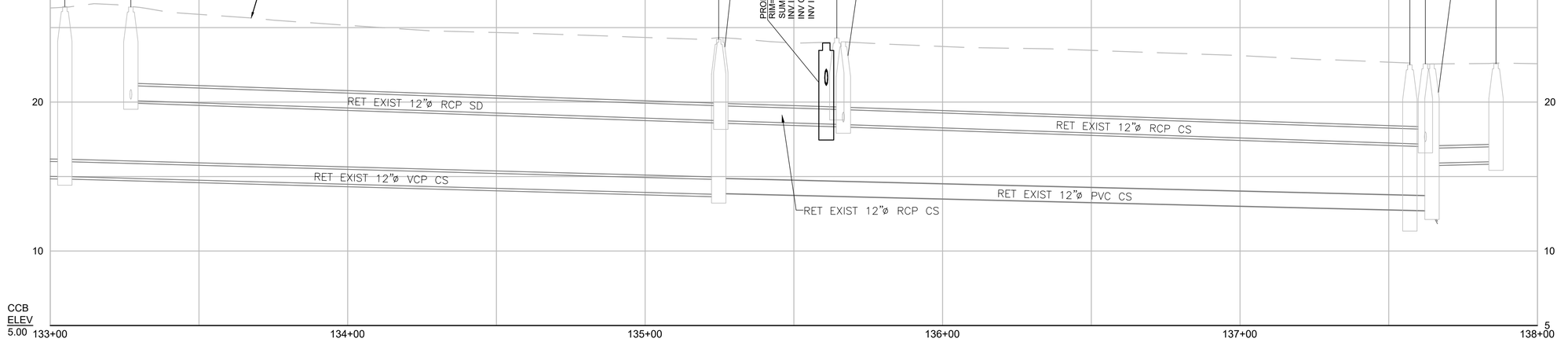

PLAN AND PROFILE - GREEN STREET

HOR. SCALE IN FEET
20 0 20 40
4 0 4 8
VER. SCALE IN FEET

NOTE:
1. SEE SHEET CD1.06 FOR DRAINAGE INLET SCHEDULE.

ISSUED FOR BID

HDR ENGINEERING, INC.
99 HIGH STREET, SUITE 2300
BOSTON, MASSACHUSETTS 02110-2378
(617) 357-7700

COMMONWEALTH OF MASSACHUSETTS
HUGH J. NEENAN
CIVIL
No. 34694
REGISTERED PROFESSIONAL ENGINEER
Hugh J. Neenan
05-02-22

Scale			
Date			
Job No.			
Designed by			
Drawn by			
Checked by	No.	Description	Date
Approved by	REVISIONS		

CAMBRIDGE DEPARTMENT OF PUBLIC THE WORKS

Client: CITY OF CAMBRIDGE, MA	Sheet: C1.10
Project: RIVER STREET INFRASTRUCTURE AND STREETSCAPE PROJECT	Total Sheets: 381
Drawing: **CIVIL CONSTRUCTION PLAN AND PROFILE - 10**	File No.

File: C:\PW\WORKING\EAST01\D0786396\7113XXX_(CIVIL CONSTRUCTION PLAN PROFILE).DWG Plotted: 5/2/2022 3:06:08 PM

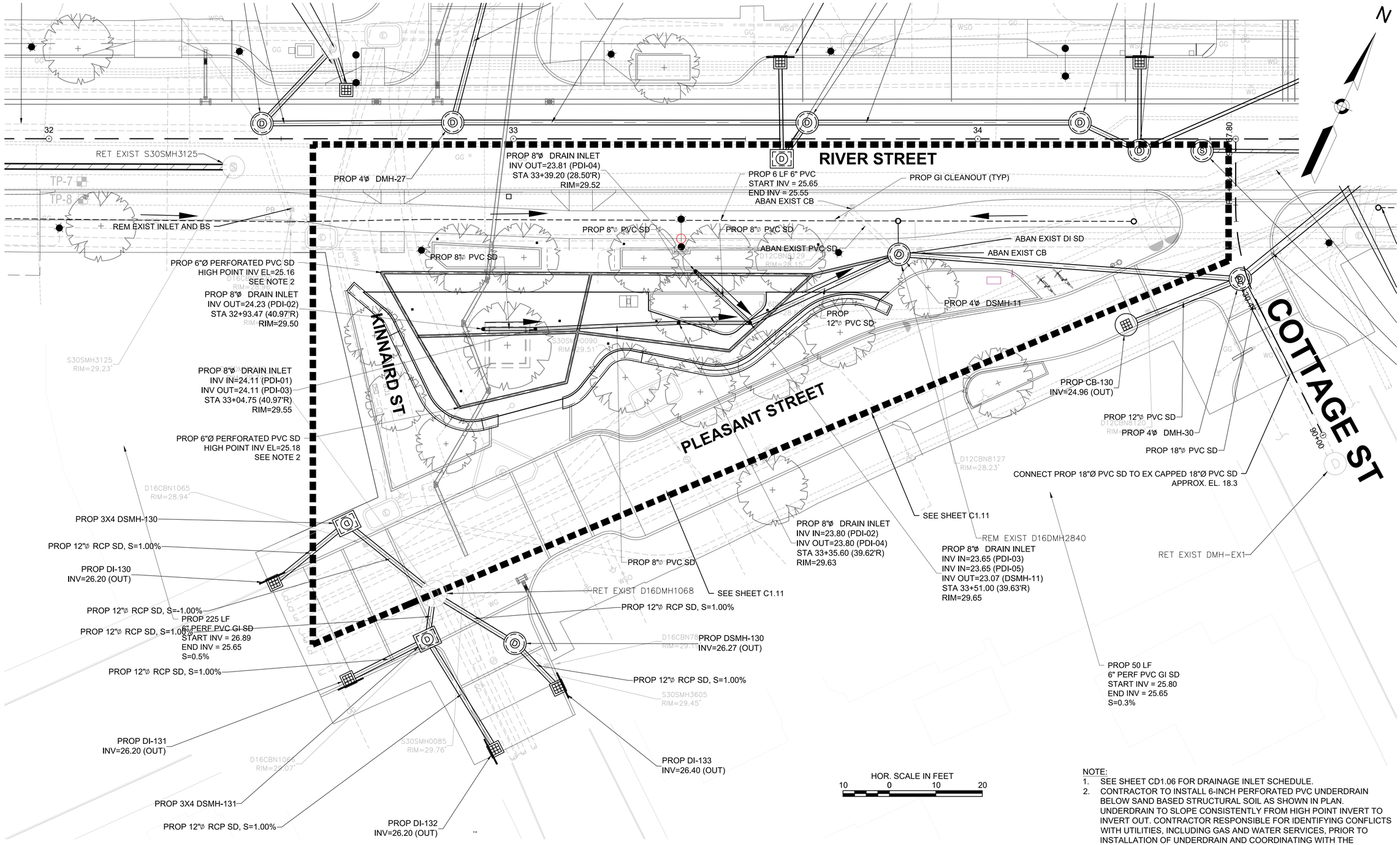

NOTE:
1. SEE SHEET CD1.06 FOR DRAINAGE INLET SCHEDULE.
2. CONTRACTOR TO INSTALL 6-INCH PERFORATED PVC UNDERDRAIN BELOW SAND BASED STRUCTURAL SOIL AS SHOWN IN PLAN. UNDERDRAIN TO SLOPE CONSISTENTLY FROM HIGH POINT INVERT TO INVERT OUT. CONTRACTOR RESPONSIBLE FOR IDENTIFYING CONFLICTS WITH UTILITIES, INCLUDING GAS AND WATER SERVICES, PRIOR TO INSTALLATION OF UNDERDRAIN AND COORDINATING WITH THE NECESSARY UTILITY OWNER FOR RELOCATION.

PLAN - TUBMAN PLAZA

ISSUED FOR BID

HDR ENGINEERING, INC.
99 HIGH STREET, SUITE 2300
BOSTON, MASSACHUSETTS 02110-2378
(617) 357-7700

COMMONWEALTH OF MASSACHUSETTS
HUGH J. NEENAN
CIVIL
No. 34694
REGISTERED PROFESSIONAL ENGINEER
Hugh J. Neenan
05-02-22

Scale			
Date			
Job No.			
Designed by			
Drawn by			
Checked by	No.	Description	Date
Approved by	REVISIONS		

CAMBRIDGE DEPARTMENT OF PUBLIC WORKS

Client: CITY OF CAMBRIDGE, MA	Sheet: C1.11
Project: RIVER STREET INFRASTRUCTURE AND STREETSCAPE PROJECT	Total Sheets: 381
Drawing: **CIVIL CONSTRUCTION PLAN AND PROFILE - 11**	File No.

File: C:\PW\WORKING\EAST01\D0786396\7113XXX_(CIVIL CONSTRUCTION PLAN PROFILE).DWG Plotted: 5/2/2022 3:06:21 PM

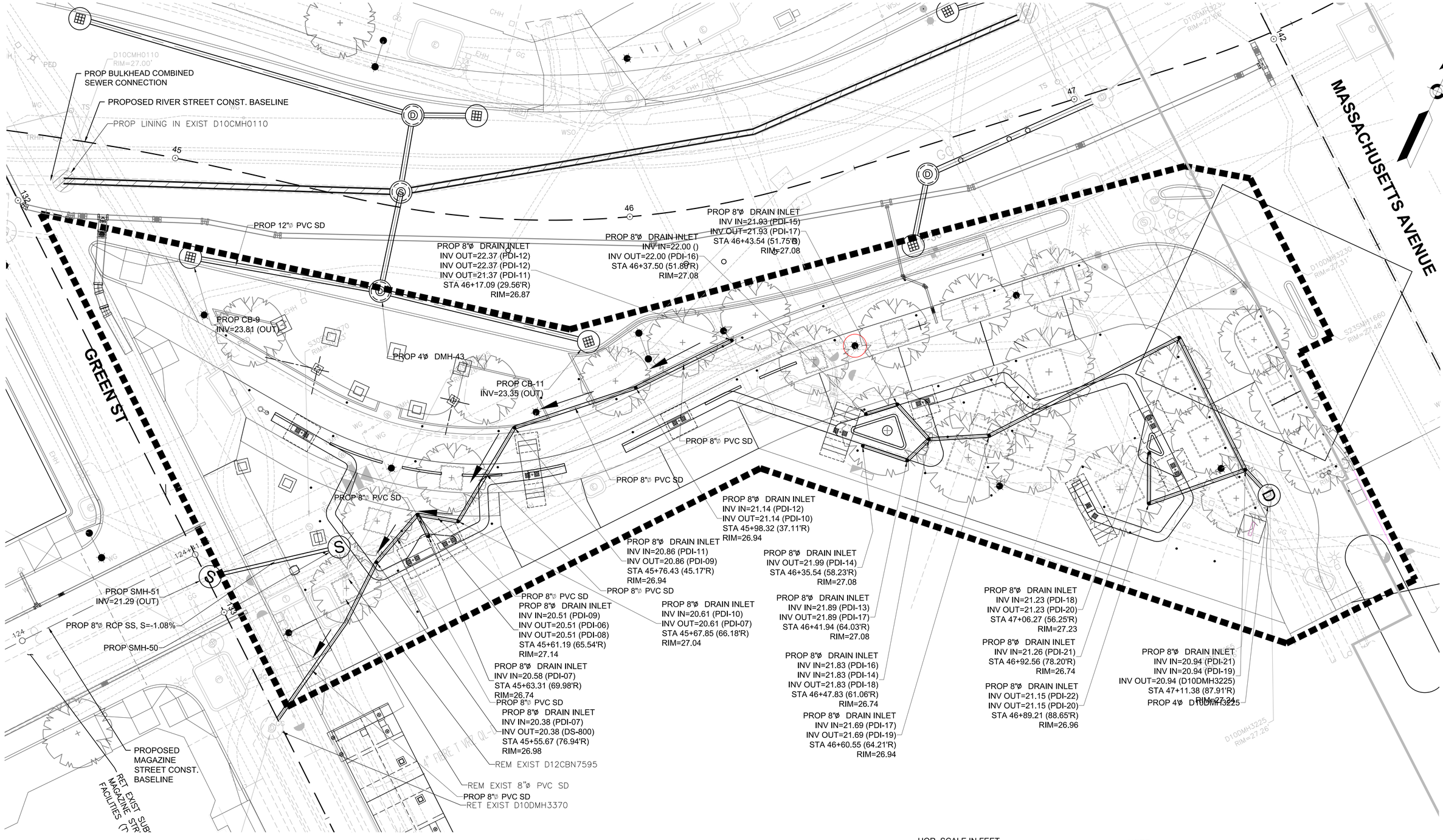

PLAN - CARL BARROW PLAZA

HOR. SCALE IN FEET
10 0 10 20

NOTE:
1. SEE SHEET CD1.06 FOR DRAINAGE INLET SCHEDULE.

ISSUED FOR BID

HDR ENGINEERING, INC.
99 HIGH STREET, SUITE 2300
BOSTON, MASSACHUSETTS 02110-2378
(617) 357-7700

COMMONWEALTH OF MASSACHUSETTS
HUGH J. NEENAN
CIVIL
No. 34694
REGISTERED PROFESSIONAL ENGINEER
Hugh J. Neenan
05-02-22

Scale			
Date			
Job No.			
Designed by			
Drawn by			
Checked by	No.	Description	Date
Approved by	REVISIONS		

CAMBRIDGE DEPARTMENT OF PUBLIC WORKS

Client: CITY OF CAMBRIDGE, MA	Sheet: C1.12
Project: RIVER STREET INFRASTRUCTURE AND STREETSCAPE PROJECT	Total Sheets: 381
Drawing: **CIVIL CONSTRUCTION PLAN AND PROFILE - 12**	File No.

File: C:\PWWORKING\EAST01\D0786396\7113XXX_(CIVIL CONSTRUCTION PLAN PROFILE).DWG Plotted: 5/2/2022 3:06:34 PM

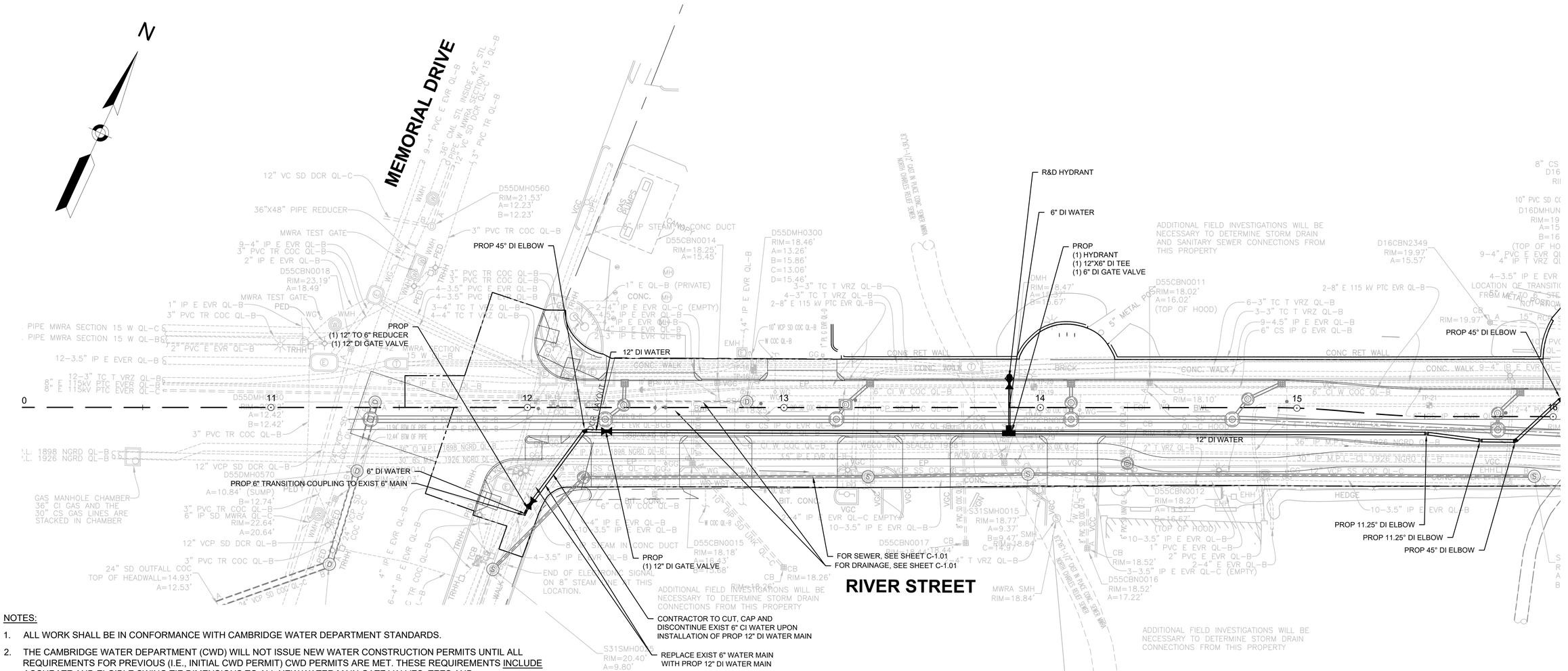

NOTES:

1. ALL WORK SHALL BE IN CONFORMANCE WITH CAMBRIDGE WATER DEPARTMENT STANDARDS.
2. THE CAMBRIDGE WATER DEPARTMENT (CWD) WILL NOT ISSUE NEW WATER CONSTRUCTION PERMITS UNTIL ALL REQUIREMENTS FOR PREVIOUS (I.E., INITIAL CWD PERMIT) CWD PERMITS ARE MET. THESE REQUIREMENTS INCLUDE ACCURATE AND ELGIBLE SWING TIE DIMENSIONS TO ALL NEW WATER MAIN GATE VALVES, TEES AND ELBOWS, REQUIRED CWD "SIGN OFF'S" ON THE CONTRACTOR'S COPY OF THE CWD EXECUTES PERMIT (WHEN PERMITTED WORK IS COMPLETE), TEST DOCUMENTATION THAT INCLUDES MASSACHUSETTS STATE CERTIFIED INITIAL CHLORINATION AND BACTERIA TESTING OF NEW WATER MAIN WORK, AND PRESSURE TEST RESULTS OF NEW WATER MAIN WORK. THE CONTRACTOR IS HEREBY ADVISED, THAT THE CWD WILL NOT BE RESPONSIBLE FOR THE CONTRACTOR'S SLIP IN PROJECT SCHEDULE IF THESE REQUIREMENTS FOR PERMITS ARE NOT FOLLOWED.
3. UNLESS OTHERWISE, NOTED, WATER MAINS SHALL BE INSTALLED WITH MINIMUM 5.0' COVER.
4. CONTRACTOR TO PROVIDE 1" CHLORINATION TAP AT ALL LOCATIONS WHERE PROPOSED WATER MAIN CONNECTS TO EXISTING WATER MAIN.
5. ALL ELBOWS, TEES, AND CONNECTIONS TO BE PROPERLY RETAINED PER THE CITY OF CAMBRIDGE WATER DEPARTMENT STANDARDS.
6. IF LOCATION OF EXISTING CURB STOP IS INACCESSIBLE FOR REPLACEMENT, CONTRACTOR TO COORDINATE WITH CWD TO DETERMINE LOCATION OF NEW CURB STOP PRIOR TO INSTALLATION.
7. ALL WATER SERVICE TO BE VERIFIED BY CONTRACTOR AND CONNECTED TO NEW WATER MAIN. EXISTING LEAD SERVICES IN THE STREET SHALL BE REMOVED AND REPLACED TO THE METER. CONTRACTOR SHALL CONDUCT TWO TEST PITS PER LEAD SERVICE. ONE AT THE CONNECTION AT THE MAIN AND OTHER WITHIN EXISTING SIDEWALK. ALL OTHER NON-COPPER SERVICES AND SERVICES UNDER 1" IN DIAMETER SHALL BE REPLACED TO THE BACK OF SIDEWALK WITH 1" SERVICES. ADDITIONAL LOCATIONS TO BE VERIFIED BY THE CONTRACTOR IN THE FIELD.
8. FOR WATER SERVICES GREATER THAN 1" IN SIZE, CONTRACTOR TO INSTALL VALVE AT THE MAIN PER DETAILS. WATER SERVICES 1-1/4" IN SIZE SHALL BE REPLACED TO THE BACK OF SIDEWALK WITH 1-1/2" SERVICES. ADDITIONAL LOCATIONS TO BE VERIFIED BY CONTRACTOR IN THE FIELD.
9. EXISTING WATER MAIN TO BE ABANDONED AFTER PROPOSED WATER MAIN IS INSTALLED.

PLAN

0 20 50 100

SCALE: 1" = 20'

ISSUED FOR BID

HDR ENGINEERING, INC.
99 HIGH STREET, SUITE 2300
BOSTON, MASSACHUSETTS 02110-2378
(617) 357-7700

COMMONWEALTH OF MASSACHUSETTS
PHILIP FUSCO
CIVIL
No. 45868
REGISTERED PROFESSIONAL ENGINEER

Scale			
Date			
Job No.			
Designed by			
Drawn by			
Checked by	No.	Description	Date
Approved by	REVISIONS		

THE WORKS — CAMBRIDGE DEPARTMENT OF PUBLIC

Client: CITY OF CAMBRIDGE, MA

Project: RIVER STREET
INFRASTRUCTURE AND STREETSCAPE PROJECT

Drawing: **WATER MAIN AND UTILITY COORDINATION PLANS - 1**

Sheet: U1.01

Total Sheets: 381

File No.

File: C:\PWWORKING\EAST01\D0786396\7113XXX_(UTILITY COORDINATION PLANS).DWG Plotted: 4/15/2022 2:52:03 PM

SEE SHEET U1.08

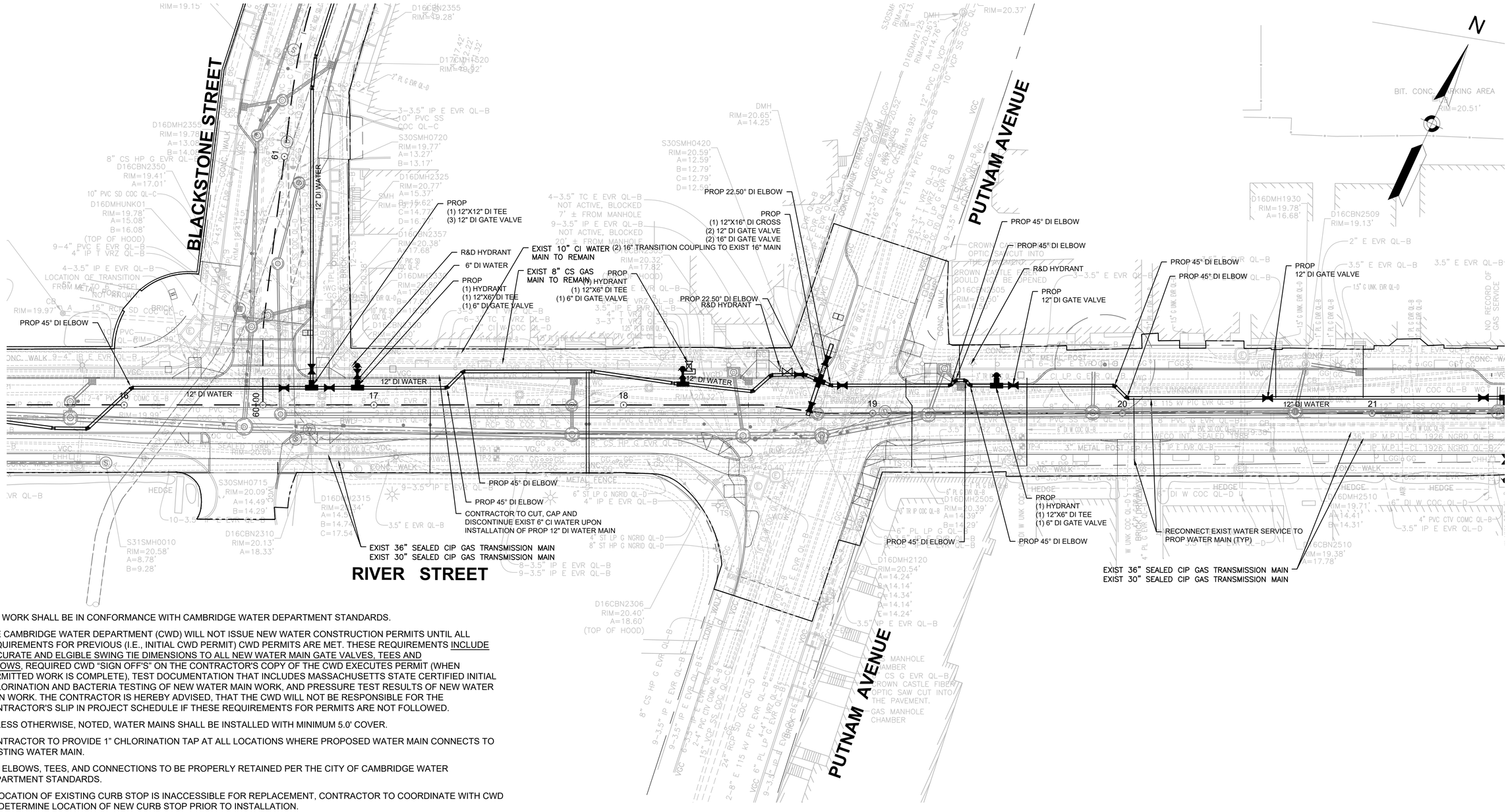

NOTES:

1. ALL WORK SHALL BE IN CONFORMANCE WITH CAMBRIDGE WATER DEPARTMENT STANDARDS.
2. THE CAMBRIDGE WATER DEPARTMENT (CWD) WILL NOT ISSUE NEW WATER CONSTRUCTION PERMITS UNTIL ALL REQUIREMENTS FOR PREVIOUS (I.E., INITIAL CWD PERMIT) CWD PERMITS ARE MET. THESE REQUIREMENTS INCLUDE ACCURATE AND ELGIBLE SWING TIE DIMENSIONS TO ALL NEW WATER MAIN GATE VALVES, TEES AND ELBOWS, REQUIRED CWD "SIGN OFF'S" ON THE CONTRACTOR'S COPY OF THE CWD EXECUTES PERMIT (WHEN PERMITTED WORK IS COMPLETE), TEST DOCUMENTATION THAT INCLUDES MASSACHUSETTS STATE CERTIFIED INITIAL CHLORINATION AND BACTERIA TESTING OF NEW WATER MAIN WORK, AND PRESSURE TEST RESULTS OF NEW WATER MAIN WORK. THE CONTRACTOR IS HEREBY ADVISED, THAT THE CWD WILL NOT BE RESPONSIBLE FOR THE CONTRACTOR'S SLIP IN PROJECT SCHEDULE IF THESE REQUIREMENTS FOR PERMITS ARE NOT FOLLOWED.
3. UNLESS OTHERWISE, NOTED, WATER MAINS SHALL BE INSTALLED WITH MINIMUM 5.0' COVER.
4. CONTRACTOR TO PROVIDE 1" CHLORINATION TAP AT ALL LOCATIONS WHERE PROPOSED WATER MAIN CONNECTS TO EXISTING WATER MAIN.
5. ALL ELBOWS, TEES, AND CONNECTIONS TO BE PROPERLY RETAINED PER THE CITY OF CAMBRIDGE WATER DEPARTMENT STANDARDS.
6. IF LOCATION OF EXISTING CURB STOP IS INACCESSIBLE FOR REPLACEMENT, CONTRACTOR TO COORDINATE WITH CWD TO DETERMINE LOCATION OF NEW CURB STOP PRIOR TO INSTALLATION.
7. ALL WATER SERVICE TO BE VERIFIED BY CONTRACTOR AND CONNECTED TO NEW WATER MAIN. EXISTING LEAD SERVICES IN THE STREET SHALL BE REMOVED AND REPLACED TO THE METER. CONTRACTOR SHALL CONDUCT TWO TEST PITS PER LEAD SERVICE. ONE AT THE CONNECTION AT THE MAIN AND OTHER WITHIN EXISTING SIDEWALK. ALL OTHER NON-COPPER SERVICES AND SERVICES UNDER 1" IN DIAMETER SHALL BE REPLACED TO THE BACK OF SIDEWALK WITH 1" SERVICES. ADDITIONAL LOCATIONS TO BE VERIFIED BY THE CONTRACTOR IN THE FIELD.
8. FOR WATER SERVICES GREATER THAN 1" IN SIZE, CONTRACTOR TO INSTALL VALVE AT THE MAIN PER DETAILS. WATER SERVICES 1-1/4" IN SIZE SHALL BE REPLACED TO THE BACK OF SIDEWALK WITH 1-1/2" SERVICES. ADDITIONAL LOCATIONS TO BE VERIFIED BY CONTRACTOR IN THE FIELD.
9. EXISTING WATER MAIN TO BE ABANDONED AFTER PROPOSED WATER MAIN IS INSTALLED.

PLAN

0 20 50 100

SCALE: 1" = 20'

ISSUED FOR BID

HDR ENGINEERING, INC.
99 HIGH STREET, SUITE 2300
BOSTON, MASSACHUSETTS 02110-2378
(617) 357-7700

COMMONWEALTH OF MASSACHUSETTS
PHILIP FUSCO
CIVIL
No. 45868
REGISTERED PROFESSIONAL ENGINEER

Scale			
Date			
Job No.			
Designed by			
Drawn by			
Checked by	No.	Description	Date
Approved by	REVISIONS		

THE WORKS — CAMBRIDGE DEPARTMENT OF PUBLIC WORKS

Client: CITY OF CAMBRIDGE, MA

Project: RIVER STREET
INFRASTRUCTURE AND STREETSCAPE PROJECT

Drawing: **WATER MAIN AND UTILITY COORDINATION PLANS - 2**

Sheet: U1.02

Total Sheets: 381

File No.

File: C:\PWWORKING\EAST01\D0786396\7113XXX_(UTILITY COORDINATION PLANS).DWG Plotted: 4/15/2022 2:52:16 PM

NOTES:

1. ALL WORK SHALL BE IN CONFORMANCE WITH CAMBRIDGE WATER DEPARTMENT STANDARDS.
2. THE CAMBRIDGE WATER DEPARTMENT (CWD) WILL NOT ISSUE NEW WATER CONSTRUCTION PERMITS UNTIL ALL REQUIREMENTS FOR PREVIOUS (I.E., INITIAL CWD PERMIT) CWD PERMITS ARE MET. THESE REQUIREMENTS INCLUDE ACCURATE AND ELGIBLE SWING TIE DIMENSIONS TO ALL NEW WATER MAIN GATE VALVES, TEES AND ELBOWS, REQUIRED CWD "SIGN OFF'S" ON THE CONTRACTOR'S COPY OF THE CWD EXECUTES PERMIT (WHEN PERMITTED WORK IS COMPLETE), TEST DOCUMENTATION THAT INCLUDES MASSACHUSETTS STATE CERTIFIED INITIAL CHLORINATION AND BACTERIA TESTING OF NEW WATER MAIN WORK, AND PRESSURE TEST RESULTS OF NEW WATER MAIN WORK. THE CONTRACTOR IS HEREBY ADVISED, THAT THE CWD WILL NOT BE RESPONSIBLE FOR THE CONTRACTOR'S SLIP IN PROJECT SCHEDULE IF THESE REQUIREMENTS FOR PERMITS ARE NOT FOLLOWED.
3. UNLESS OTHERWISE, NOTED, WATER MAINS SHALL BE INSTALLED WITH MINIMUM 5.0' COVER.
4. CONTRACTOR TO PROVIDE 1" CHLORINATION TAP AT ALL LOCATIONS WHERE PROPOSED WATER MAIN CONNECTS TO EXISTING WATER MAIN.
5. ALL ELBOWS, TEES, AND CONNECTIONS TO BE PROPERLY RETAINED PER THE CITY OF CAMBRIDGE WATER DEPARTMENT STANDARDS.
6. IF LOCATION OF EXISTING CURB STOP IS INACCESSIBLE FOR REPLACEMENT, CONTRACTOR TO COORDINATE WITH CWD TO DETERMINE LOCATION OF NEW CURB STOP PRIOR TO INSTALLATION.
7. ALL WATER SERVICE TO BE VERIFIED BY CONTRACTOR AND CONNECTED TO NEW WATER MAIN. EXISTING LEAD SERVICES IN THE STREET SHALL BE REMOVED AND REPLACED TO THE METER. CONTRACTOR SHALL CONDUCT TWO TEST PITS PER LEAD SERVICE. ONE AT THE CONNECTION AT THE MAIN AND OTHER WITHIN EXISTING SIDEWALK. ALL OTHER NON-COPPER SERVICES AND SERVICES UNDER 1" IN DIAMETER SHALL BE REPLACED TO THE BACK OF SIDEWALK WITH 1" SERVICES. ADDITIONAL LOCATIONS TO BE VERIFIED BY THE CONTRACTOR IN THE FIELD.
8. FOR WATER SERVICES GREATER THAN 1" IN SIZE, CONTRACTOR TO INSTALL VALVE AT THE MAIN PER DETAILS. WATER SERVICES 1-1/4" IN SIZE SHALL BE REPLACED TO THE BACK OF SIDEWALK WITH 1-1/2" SERVICES. ADDITIONAL LOCATIONS TO BE VERIFIED BY CONTRACTOR IN THE FIELD.
9. EXISTING WATER MAIN TO BE ABANDONED AFTER PROPOSED WATER MAIN IS INSTALLED.

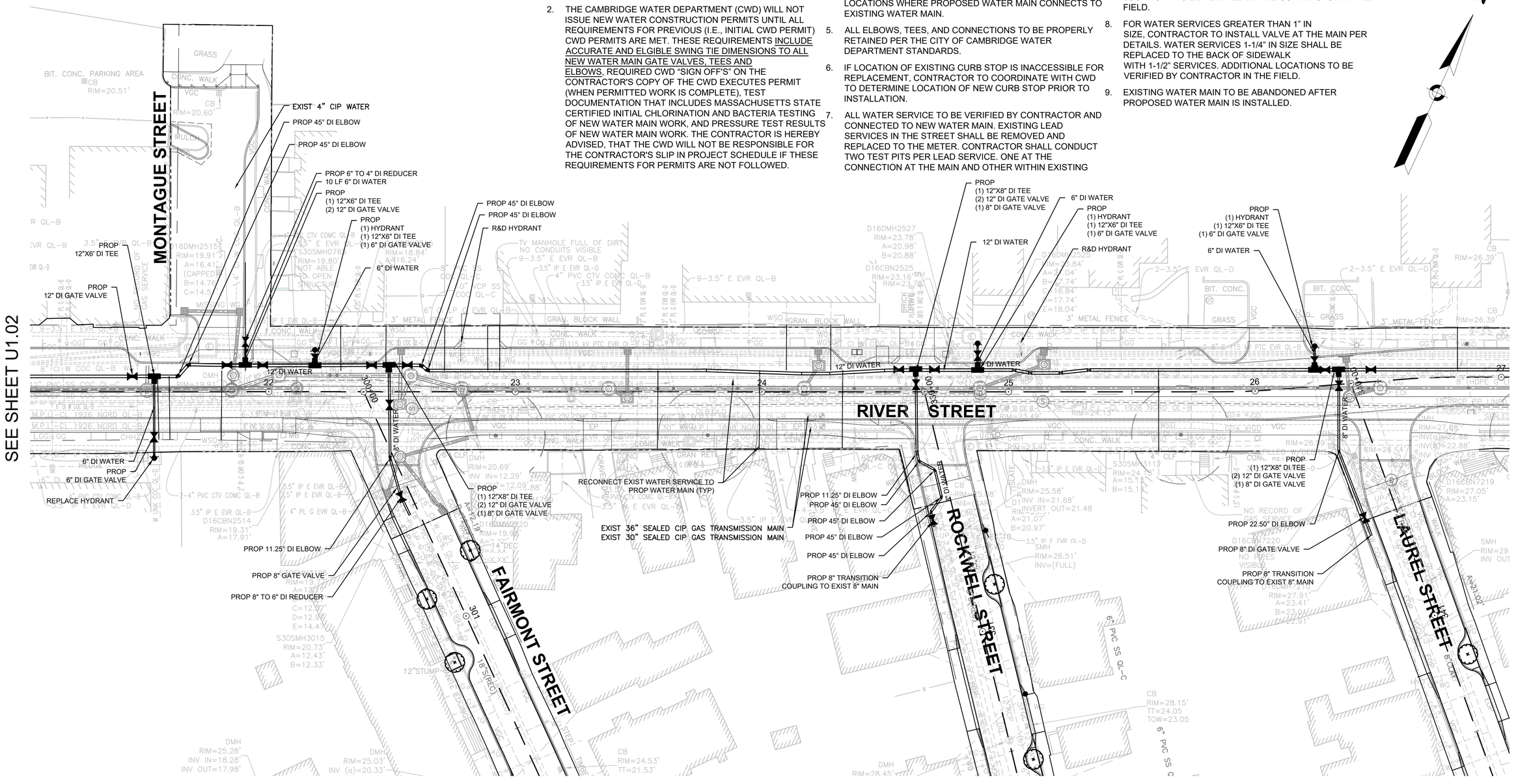

PLAN

0 20 50 100

SCALE: 1" = 20'

ISSUED FOR BID

HDR ENGINEERING, INC.
99 HIGH STREET, SUITE 2300
BOSTON, MASSACHUSETTS 02110-2378
(617) 357-7700

PHILIP FUSCO CIVIL No. 45868 REGISTERED PROFESSIONAL ENGINEER
COMMONWEALTH OF MASSACHUSETTS

Scale			
Date			
Job No.			
Designed by			
Drawn by			
Checked by	No.	Description	Date
Approved by	REVISIONS		

THE WORKS — CAMBRIDGE DEPARTMENT OF PUBLIC

Client: CITY OF CAMBRIDGE, MA

Project: RIVER STREET INFRASTRUCTURE AND STREETSCAPE PROJECT

Drawing: **WATER MAIN AND UTILITY COORDINATION PLANS - 3**

Sheet: U1.03

Total Sheets: 381

File No.

File: C:\PWWORKING\EAST01\D0786396\7113XXX_(UTILITY COORDINATION PLANS).DWG Plotted: 4/15/2022 2:52:31 PM

SEE SHEET U1.03

SEE SHEET U1.05

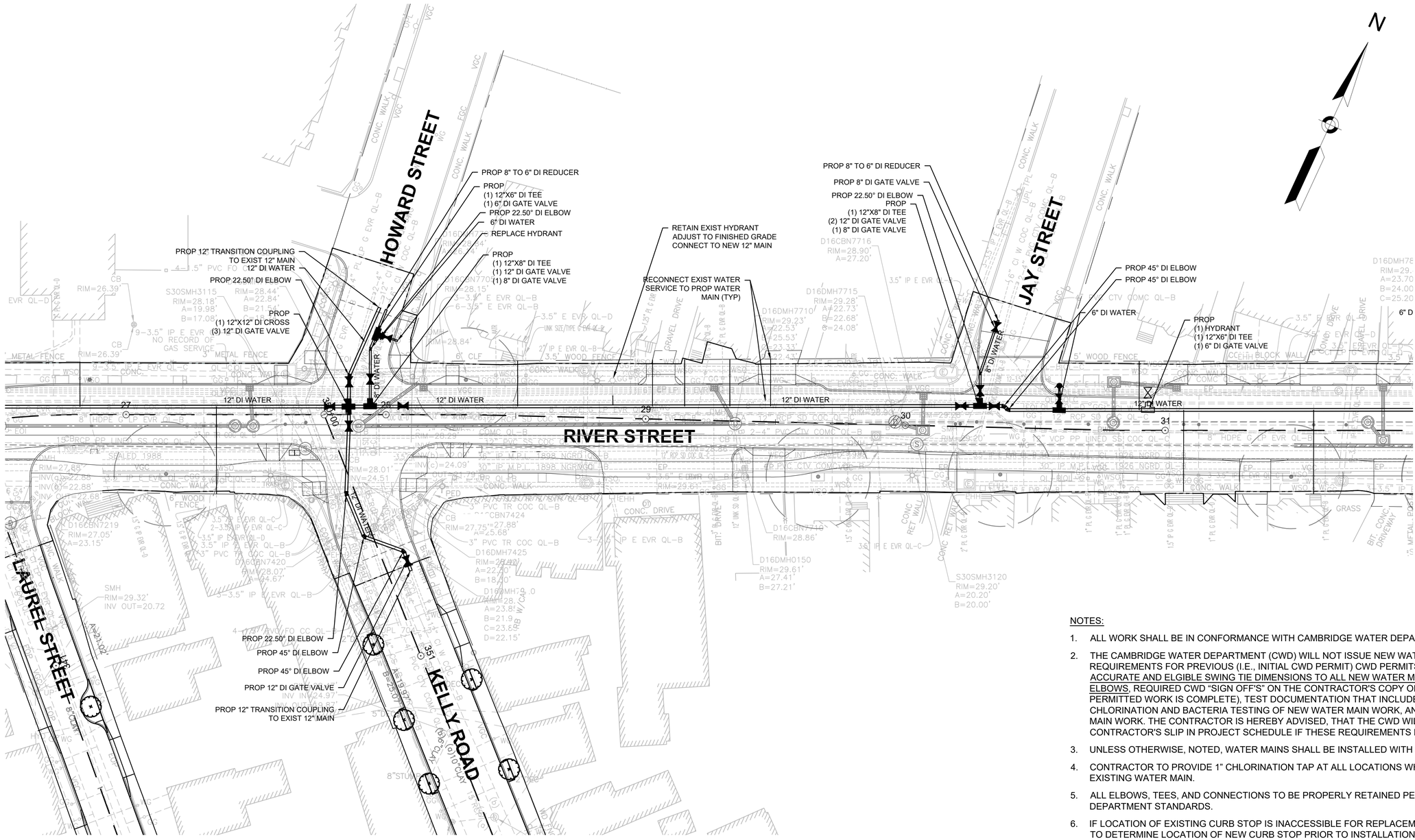

PLAN

0 20 50 100

SCALE: 1" = 20'

NOTES:

1. ALL WORK SHALL BE IN CONFORMANCE WITH CAMBRIDGE WATER DEPARTMENT STANDARDS.
2. THE CAMBRIDGE WATER DEPARTMENT (CWD) WILL NOT ISSUE NEW WATER CONSTRUCTION PERMITS UNTIL ALL REQUIREMENTS FOR PREVIOUS (I.E., INITIAL CWD PERMIT) CWD PERMITS ARE MET. THESE REQUIREMENTS INCLUDE ACCURATE AND ELGIBLE SWING TIE DIMENSIONS TO ALL NEW WATER MAIN GATE VALVES, TEES AND ELBOWS, REQUIRED CWD "SIGN OFF'S" ON THE CONTRACTOR'S COPY OF THE CWD EXECUTES PERMIT (WHEN PERMITTED WORK IS COMPLETE), TEST DOCUMENTATION THAT INCLUDES MASSACHUSETTS STATE CERTIFIED INITIAL CHLORINATION AND BACTERIA TESTING OF NEW WATER MAIN WORK, AND PRESSURE TEST RESULTS OF NEW WATER MAIN WORK. THE CONTRACTOR IS HEREBY ADVISED, THAT THE CWD WILL NOT BE RESPONSIBLE FOR THE CONTRACTOR'S SLIP IN PROJECT SCHEDULE IF THESE REQUIREMENTS FOR PERMITS ARE NOT FOLLOWED.
3. UNLESS OTHERWISE, NOTED, WATER MAINS SHALL BE INSTALLED WITH MINIMUM 5.0' COVER.
4. CONTRACTOR TO PROVIDE 1" CHLORINATION TAP AT ALL LOCATIONS WHERE PROPOSED WATER MAIN CONNECTS TO EXISTING WATER MAIN.
5. ALL ELBOWS, TEES, AND CONNECTIONS TO BE PROPERLY RETAINED PER THE CITY OF CAMBRIDGE WATER DEPARTMENT STANDARDS.
6. IF LOCATION OF EXISTING CURB STOP IS INACCESSIBLE FOR REPLACEMENT, CONTRACTOR TO COORDINATE WITH CWD TO DETERMINE LOCATION OF NEW CURB STOP PRIOR TO INSTALLATION.
7. ALL WATER SERVICE TO BE VERIFIED BY CONTRACTOR AND CONNECTED TO NEW WATER MAIN. EXISTING LEAD SERVICES IN THE STREET SHALL BE REMOVED AND REPLACED TO THE METER. CONTRACTOR SHALL CONDUCT TWO TEST PITS PER LEAD SERVICE. ONE AT THE CONNECTION AT THE MAIN AND OTHER WITHIN EXISTING SIDEWALK. ALL OTHER NON-COPPER SERVICES AND SERVICES UNDER 1" IN DIAMETER SHALL BE REPLACED TO THE BACK OF SIDEWALK WITH 1" SERVICES. ADDITIONAL LOCATIONS TO BE VERIFIED BY THE CONTRACTOR IN THE FIELD.
8. FOR WATER SERVICES GREATER THAN 1" IN SIZE, CONTRACTOR TO INSTALL VALVE AT THE MAIN PER DETAILS. WATER SERVICES 1-1/4" IN SIZE SHALL BE REPLACED TO THE BACK OF SIDEWALK WITH 1-1/2" SERVICES. ADDITIONAL LOCATIONS TO BE VERIFIED BY CONTRACTOR IN THE FIELD.
9. EXISTING WATER MAIN TO BE ABANDONED AFTER PROPOSED WATER MAIN IS INSTALLED.

ISSUED FOR BID

HDR ENGINEERING, INC.
99 HIGH STREET, SUITE 2300
BOSTON, MASSACHUSETTS 02110-2378
(617) 357-7700

COMMONWEALTH OF MASSACHUSETTS
PHILIP FUSCO
CIVIL
No. 45868
REGISTERED PROFESSIONAL ENGINEER

Scale			
Date			
Job No.			
Designed by			
Drawn by			
Checked by	No.	Description	Date
Approved by	REVISIONS		

THE WORKS — CAMBRIDGE DEPARTMENT OF PUBLIC

Client	CITY OF CAMBRIDGE, MA	Sheet	U1.04
Project	RIVER STREET INFRASTRUCTURE AND STREETSCAPE PROJECT	Total Sheets	381
Drawing	**WATER MAIN AND UTILITY COORDINATION PLANS - 4**	File No.	

File: C:\PWWORKINGIEAST01\D0786396\7113XXX_(UTILITY COORDINATION PLANS).DWG Plotted: 4/15/2022 2:52:46 PM

NOTES:

1. ALL WORK SHALL BE IN CONFORMANCE WITH CAMBRIDGE WATER DEPARTMENT STANDARDS.
2. THE CAMBRIDGE WATER DEPARTMENT (CWD) WILL NOT ISSUE NEW WATER CONSTRUCTION PERMITS UNTIL ALL REQUIREMENTS FOR PREVIOUS (I.E., INITIAL CWD PERMIT) CWD PERMITS ARE MET. THESE REQUIREMENTS INCLUDE ACCURATE AND ELGIBLE SWING TIE DIMENSIONS TO ALL NEW WATER MAIN GATE VALVES, TEES AND ELBOWS, REQUIRED CWD "SIGN OFF'S" ON THE CONTRACTOR'S COPY OF THE CWD EXECUTES PERMIT (WHEN PERMITTED WORK IS COMPLETE), TEST DOCUMENTATION THAT INCLUDES MASSACHUSETTS STATE CERTIFIED INITIAL CHLORINATION AND BACTERIA TESTING OF NEW WATER MAIN WORK, AND PRESSURE TEST RESULTS OF NEW WATER MAIN WORK. THE CONTRACTOR IS HEREBY ADVISED, THAT THE CWD WILL NOT BE RESPONSIBLE FOR THE CONTRACTOR'S SLIP IN PROJECT SCHEDULE IF THESE REQUIREMENTS FOR PERMITS ARE NOT FOLLOWED.
3. UNLESS OTHERWISE, NOTED, WATER MAINS SHALL BE INSTALLED WITH MINIMUM 5.0' COVER.
4. CONTRACTOR TO PROVIDE 1" CHLORINATION TAP AT ALL LOCATIONS WHERE PROPOSED WATER MAIN CONNECTS TO EXISTING WATER MAIN.
5. ALL ELBOWS, TEES, AND CONNECTIONS TO BE PROPERLY RETAINED PER THE CITY OF CAMBRIDGE WATER DEPARTMENT STANDARDS.
6. IF LOCATION OF EXISTING CURB STOP IS INACCESSIBLE FOR REPLACEMENT, CONTRACTOR TO COORDINATE WITH CWD TO DETERMINE LOCATION OF NEW CURB STOP PRIOR TO INSTALLATION.
7. ALL WATER SERVICE TO BE VERIFIED BY CONTRACTOR AND CONNECTED TO NEW WATER MAIN. EXISTING LEAD SERVICES IN THE STREET SHALL BE REMOVED AND REPLACED TO THE METER. CONTRACTOR SHALL CONDUCT TWO TEST PITS PER LEAD SERVICE. ONE AT THE CONNECTION AT THE MAIN AND OTHER WITHIN EXISTING SIDEWALK. ALL OTHER NON-COPPER SERVICES AND SERVICES UNDER 1" IN DIAMETER SHALL BE REPLACED TO THE BACK OF SIDEWALK WITH 1" SERVICES. ADDITIONAL LOCATIONS TO BE VERIFIED BY THE CONTRACTOR IN THE FIELD.
8. FOR WATER SERVICES GREATER THAN 1" IN SIZE, CONTRACTOR TO INSTALL VALVE AT THE MAIN PER DETAILS. WATER SERVICES 1-1/4" IN SIZE SHALL BE REPLACED TO THE BACK OF SIDEWALK WITH 1-1/2" SERVICES. ADDITIONAL LOCATIONS TO BE VERIFIED BY CONTRACTOR IN THE FIELD.
9. EXISTING WATER MAIN TO BE ABANDONED AFTER PROPOSED WATER MAIN IS INSTALLED.

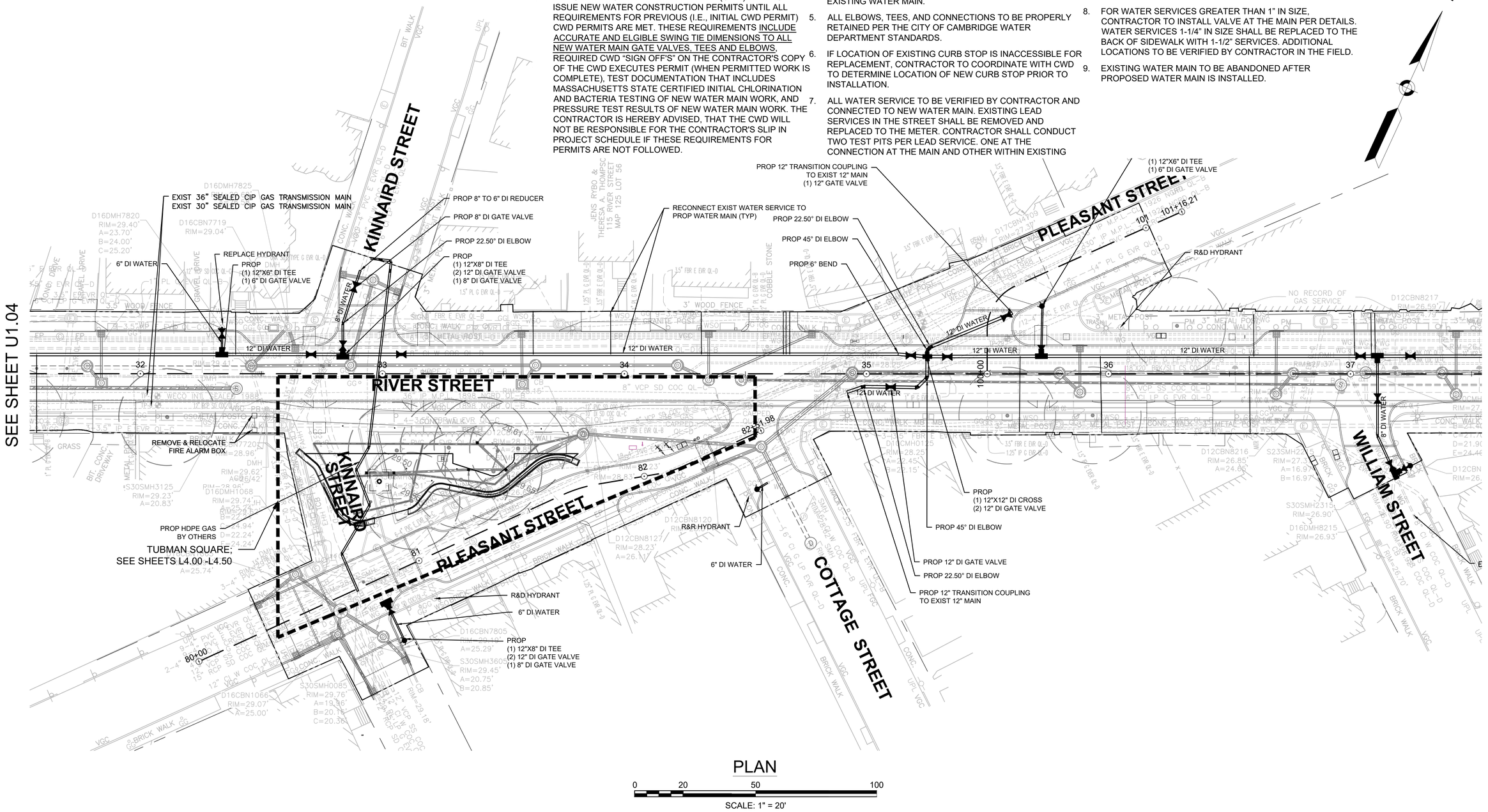

PLAN

0 20 50 100

SCALE: 1" = 20'

CONFORMED SET

HDR ENGINEERING, INC.
99 HIGH STREET, SUITE 2300
BOSTON, MASSACHUSETTS 02110-2378
(617) 357-7700

COMMONWEALTH OF MASSACHUSETTS HUGH J. NEENAN CIVIL No. 34694 REGISTERED PROFESSIONAL ENGINEER
Hugh J. Neenan
08-24-22

Scale			
Date			
Job No.			
Designed by			
Drawn by	0	CONFORMED SET	8/5/2022
Checked by	No.	Description	Date
Approved by	REVISIONS		

THE WORKS — CAMBRIDGE DEPARTMENT OF PUBLIC WORKS

Client	CITY OF CAMBRIDGE, MA	Sheet	U1.05
Project	RIVER STREET INFRASTRUCTURE AND STREETSCAPE PROJECT	Total Sheets	381
Drawing	**WATER MAIN AND UTILITY COORDINATION PLANS - 5**	File No.	

File: C:\PWWORKING\EAST01\D0786396\7113XXX_(UTILITY COORDINATION PLANS).DWG Plotted: 8/22/2022 5:42:19 PM

SEE SHEET U1.05

SEE SHEET U1.07

N

WESTERN AVENUE

AUBURN STREET

RIVER STREET

WILLIAM STREET

FRANKLIN STREET

AUBURN STREET

PROP 8" TRANSITION COUPLING TO EXIST 8" MAIN
PROP 8" DI GATE VALVE
PROP 22.50° DI ELBOW
PROP
(1) 12"X8" DI TEE
(2) 12" DI GATE VALVE
(1) 8" DI GATE VALVE
EXIST 8" CIP WATER
PROP
(1) 12"X8" DI TEE
(2) 12" DI GATE VALVE
(1) 8" DI GATE VALVE
PROP 45° DI ELBOW
PROP 45° DI ELBOW
R&D HYDRANT
PROP
(1) HYDRANT
(1) 12"X6" DI TEE
(1) 6" DI GATE VALVE
PROP
(1) 12"X8" DI TEE
(2) 12" DI GATE VALVE
(1) 8" DI GATE VALVE
12" DI WATER
12" DI WATER
12" DI WATER
12" DI WATER
8" DI WATER
PROP 22.50° DI ELBOW
R&D HYDRANT
PROP 12" DI GATE VALVE
6" DI WATER
PROP
(1) HYDRANT
(1) 12"x6" DI TEE
(1) 6" DI GATE VALVE
PROP 8" TRANSITION COUPLING TO EXIST 8" MAIN
EXIST 8" CIP WATER
PROP
(1) 12"X8" DI TEE
(1) 12" DI GATE VALVE
(1) 8" DI GATE VALVE
R&D HYDRANT
PROP 11.25° DI ELBOW
8" DI WATER
6" DI WATER
PROP
(1) HYDRANT
(1) 8"X6" DI TEE
(1) 6" DI GATE VALVE
PROP 11.25° DI ELBOW
PROP 8" DI GATE VALVE
PROP 8" TRANSITION COUPLING TO EXIST 8" MAIN
RECONNECT EXIST WATER SERVICE TO PROP WATER MAIN (TYP)
PROP 22.50° DI ELBOW
PROP 8" DI GATE VALVE
PROP 8" TO 2" DI REDUCER

37 38 39 40 41 42

PLAN

0 20 50 100

SCALE: 1" = 20'

NOTES:

1. ALL WORK SHALL BE IN CONFORMANCE WITH CAMBRIDGE WATER DEPARTMENT STANDARDS.
2. THE CAMBRIDGE WATER DEPARTMENT (CWD) WILL NOT ISSUE NEW WATER CONSTRUCTION PERMITS UNTIL ALL REQUIREMENTS FOR PREVIOUS (I.E., INITIAL CWD PERMIT) CWD PERMITS ARE MET. THESE REQUIREMENTS INCLUDE ACCURATE AND ELGIBLE SWING TIE DIMENSIONS TO ALL NEW WATER MAIN GATE VALVES, TEES AND ELBOWS, REQUIRED CWD "SIGN OFF'S" ON THE CONTRACTOR'S COPY OF THE CWD EXECUTES PERMIT (WHEN PERMITTED WORK IS COMPLETE), TEST DOCUMENTATION THAT INCLUDES MASSACHUSETTS STATE CERTIFIED INITIAL CHLORINATION AND BACTERIA TESTING OF NEW WATER MAIN WORK, AND PRESSURE TEST RESULTS OF NEW WATER MAIN WORK. THE CONTRACTOR IS HEREBY ADVISED, THAT THE CWD WILL NOT BE RESPONSIBLE FOR THE CONTRACTOR'S SLIP IN PROJECT SCHEDULE IF THESE REQUIREMENTS FOR PERMITS ARE NOT FOLLOWED.
3. UNLESS OTHERWISE, NOTED, WATER MAINS SHALL BE INSTALLED WITH MINIMUM 5.0' COVER.
4. CONTRACTOR TO PROVIDE 1" CHLORINATION TAP AT ALL LOCATIONS WHERE PROPOSED WATER MAIN CONNECTS TO EXISTING WATER MAIN.
5. ALL ELBOWS, TEES, AND CONNECTIONS TO BE PROPERLY RETAINED PER THE CITY OF CAMBRIDGE WATER DEPARTMENT STANDARDS.
6. IF LOCATION OF EXISTING CURB STOP IS INACCESSIBLE FOR REPLACEMENT, CONTRACTOR TO COORDINATE WITH CWD TO DETERMINE LOCATION OF NEW CURB STOP PRIOR TO INSTALLATION.
7. ALL WATER SERVICE TO BE VERIFIED BY CONTRACTOR AND CONNECTED TO NEW WATER MAIN. EXISTING LEAD SERVICES IN THE STREET SHALL BE REMOVED AND REPLACED TO THE METER. CONTRACTOR SHALL CONDUCT TWO TEST PITS PER LEAD SERVICE. ONE AT THE CONNECTION AT THE MAIN AND OTHER WITHIN EXISTING SIDEWALK. ALL OTHER NON-COPPER SERVICES AND SERVICES UNDER 1" IN DIAMETER SHALL BE REPLACED TO THE BACK OF SIDEWALK WITH 1" SERVICES. ADDITIONAL LOCATIONS TO BE VERIFIED BY THE CONTRACTOR IN THE FIELD.
8. FOR WATER SERVICES GREATER THAN 1" IN SIZE, CONTRACTOR TO INSTALL VALVE AT THE MAIN PER DETAILS. WATER SERVICES 1-1/4" IN SIZE SHALL BE REPLACED TO THE BACK OF SIDEWALK WITH 1-1/2" SERVICES. ADDITIONAL LOCATIONS TO BE VERIFIED BY CONTRACTOR IN THE FIELD.
9. EXISTING WATER MAIN TO BE ABANDONED AFTER PROPOSED WATER MAIN IS INSTALLED.

ISSUED FOR BID

HDR
HDR ENGINEERING, INC.
99 HIGH STREET, SUITE 2300
BOSTON, MASSACHUSETTS 02110-2378
(617) 357-7700

COMMONWEALTH OF MASSACHUSETTS
PHILIP FUSCO
CIVIL
No. 45868
REGISTERED PROFESSIONAL ENGINEER

Scale			
Date			
Job No.			
Designed by			
Drawn by			
Checked by	No.	Description	Date
Approved by	REVISIONS		

THE WORKS
CAMBRIDGE DEPARTMENT OF PUBLIC WORKS

Client: CITY OF CAMBRIDGE, MA

Project: RIVER STREET
INFRASTRUCTURE AND STREETSCAPE PROJECT

Drawing: **WATER MAIN AND UTILITY COORDINATION PLANS - 6**

Sheet: U1.06

Total Sheets: 381

File No.

File: C:\PWWORKING\EAST01\D0786396\7113XXX_(UTILITY COORDINATION PLANS).DWG Plotted: 4/15/2022 2:53:17 PM

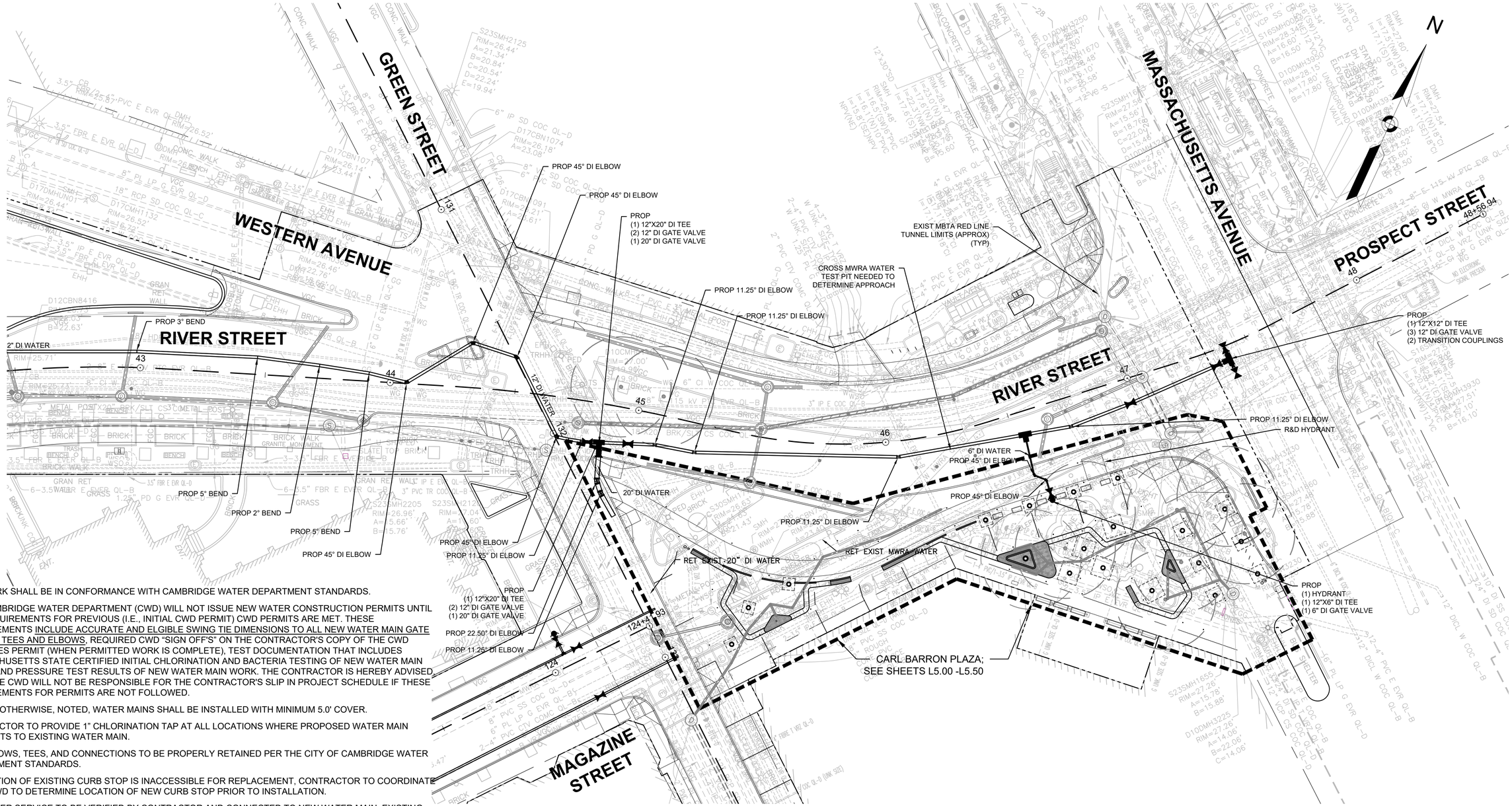

SEE SHEET U1.06

SEE SHEET U1.10

NOTES:

1. ALL WORK SHALL BE IN CONFORMANCE WITH CAMBRIDGE WATER DEPARTMENT STANDARDS.
2. THE CAMBRIDGE WATER DEPARTMENT (CWD) WILL NOT ISSUE NEW WATER CONSTRUCTION PERMITS UNTIL ALL REQUIREMENTS FOR PREVIOUS (I.E., INITIAL CWD PERMIT) CWD PERMITS ARE MET. THESE REQUIREMENTS INCLUDE ACCURATE AND ELGIBLE SWING TIE DIMENSIONS TO ALL NEW WATER MAIN GATE VALVES, TEES AND ELBOWS, REQUIRED CWD "SIGN OFF'S" ON THE CONTRACTOR'S COPY OF THE CWD EXECUTES PERMIT (WHEN PERMITTED WORK IS COMPLETE), TEST DOCUMENTATION THAT INCLUDES MASSACHUSETTS STATE CERTIFIED INITIAL CHLORINATION AND BACTERIA TESTING OF NEW WATER MAIN WORK, AND PRESSURE TEST RESULTS OF NEW WATER MAIN WORK. THE CONTRACTOR IS HEREBY ADVISED THAT THE CWD WILL NOT BE RESPONSIBLE FOR THE CONTRACTOR'S SLIP IN PROJECT SCHEDULE IF THESE REQUIREMENTS FOR PERMITS ARE NOT FOLLOWED.
3. UNLESS OTHERWISE, NOTED, WATER MAINS SHALL BE INSTALLED WITH MINIMUM 5.0' COVER.
4. CONTRACTOR TO PROVIDE 1" CHLORINATION TAP AT ALL LOCATIONS WHERE PROPOSED WATER MAIN CONNECTS TO EXISTING WATER MAIN.
5. ALL ELBOWS, TEES, AND CONNECTIONS TO BE PROPERLY RETAINED PER THE CITY OF CAMBRIDGE WATER DEPARTMENT STANDARDS.
6. IF LOCATION OF EXISTING CURB STOP IS INACCESSIBLE FOR REPLACEMENT, CONTRACTOR TO COORDINATE WITH CWD TO DETERMINE LOCATION OF NEW CURB STOP PRIOR TO INSTALLATION.
7. ALL WATER SERVICE TO BE VERIFIED BY CONTRACTOR AND CONNECTED TO NEW WATER MAIN. EXISTING LEAD SERVICES IN THE STREET SHALL BE REMOVED AND REPLACED TO THE METER. CONTRACTOR SHALL CONDUCT TWO TEST PITS PER LEAD SERVICE. ONE AT THE CONNECTION AT THE MAIN AND OTHER WITHIN EXISTING SIDEWALK. ALL OTHER NON-COPPER SERVICES AND SERVICES UNDER 1" IN DIAMETER SHALL BE REPLACED TO THE BACK OF SIDEWALK WITH 1" SERVICES. ADDITIONAL LOCATIONS TO BE VERIFIED BY THE CONTRACTOR IN THE FIELD.
8. FOR WATER SERVICES GREATER THAN 1" IN SIZE, CONTRACTOR TO INSTALL VALVE AT THE MAIN PER DETAILS. WATER SERVICES 1-1/4" IN SIZE SHALL BE REPLACED TO THE BACK OF SIDEWALK WITH 1-1/2" SERVICES. ADDITIONAL LOCATIONS TO BE VERIFIED BY CONTRACTOR IN THE FIELD.
9. EXISTING WATER MAIN TO BE ABANDONED AFTER PROPOSED WATER MAIN IS INSTALLED.

PLAN

0 20 50 100

SCALE: 1" = 20'

ISSUED FOR BID

HDR ENGINEERING, INC.
99 HIGH STREET, SUITE 2300
BOSTON, MASSACHUSETTS 02110-2378
(617) 357-7700

COMMONWEALTH OF MASSACHUSETTS
PHILIP FUSCO
CIVIL
No. 45868
REGISTERED PROFESSIONAL ENGINEER

Scale			
Date			
Job No.			
Designed by			
Drawn by			
Checked by	No.	Description	Date
Approved by	REVISIONS		

THE WORKS — CAMBRIDGE DEPARTMENT OF PUBLIC WORKS

Client: CITY OF CAMBRIDGE, MA	Sheet: U1.07
Project: RIVER STREET INFRASTRUCTURE AND STREETSCAPE PROJECT	Total Sheets: 381
Drawing: **WATER MAIN AND UTILITY COORDINATION PLANS - 7**	File No.

File: C:\PWWORKING\EAST01\D0786396\7113XXX_(UTILITY COORDINATION PLANS).DWG Plotted: 4/15/2022 2:53:33 PM

SEE SHEET U1.02

SEE SHEET U1.09

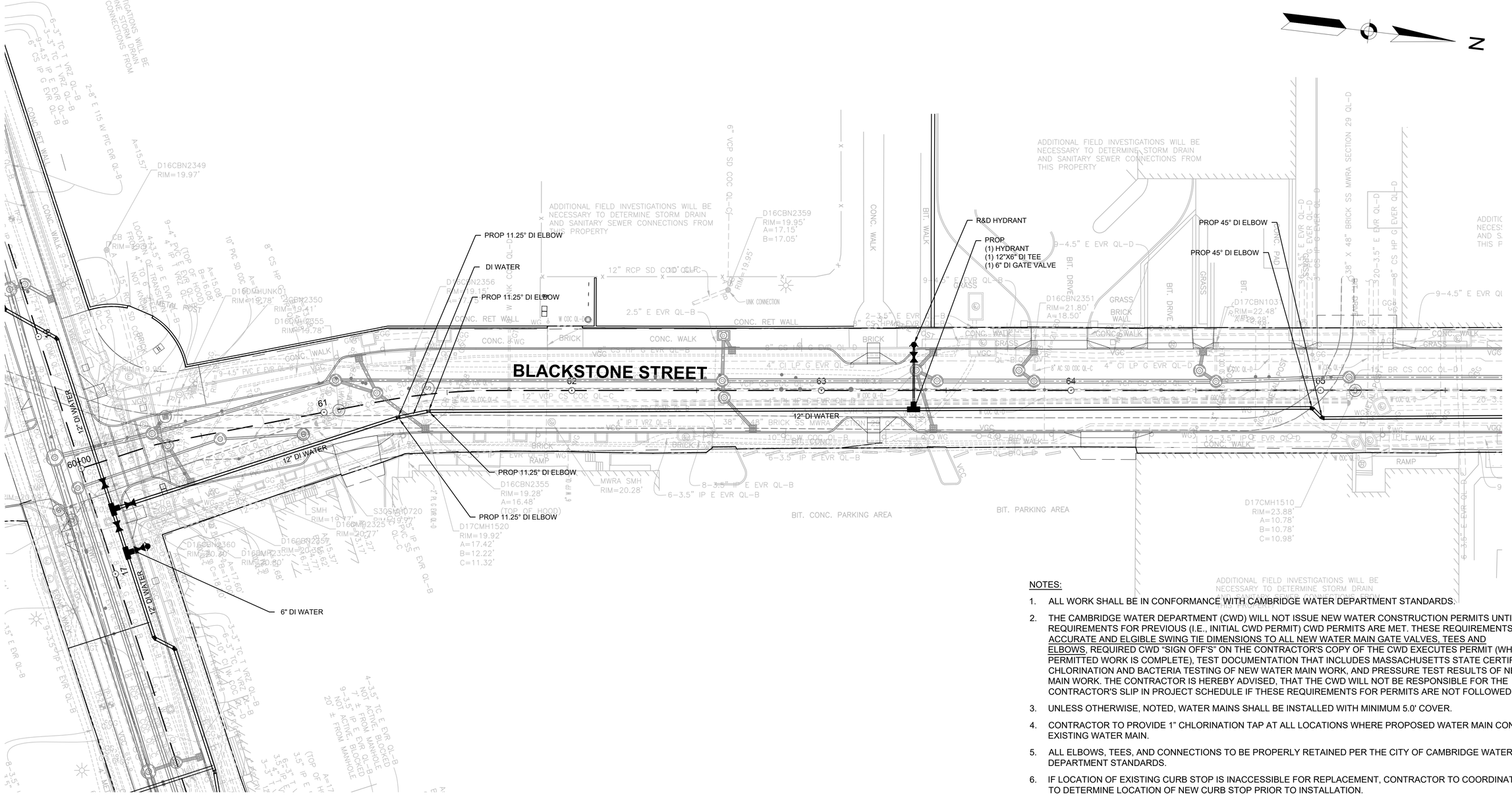

PLAN

0 20 50 100

SCALE: 1" = 20'

NOTES:

1. ALL WORK SHALL BE IN CONFORMANCE WITH CAMBRIDGE WATER DEPARTMENT STANDARDS.
2. THE CAMBRIDGE WATER DEPARTMENT (CWD) WILL NOT ISSUE NEW WATER CONSTRUCTION PERMITS UNTIL ALL REQUIREMENTS FOR PREVIOUS (I.E., INITIAL CWD PERMIT) CWD PERMITS ARE MET. THESE REQUIREMENTS INCLUDE ACCURATE AND ELGIBLE SWING TIE DIMENSIONS TO ALL NEW WATER MAIN GATE VALVES, TEES AND ELBOWS, REQUIRED CWD "SIGN OFF'S" ON THE CONTRACTOR'S COPY OF THE CWD EXECUTES PERMIT (WHEN PERMITTED WORK IS COMPLETE), TEST DOCUMENTATION THAT INCLUDES MASSACHUSETTS STATE CERTIFIED INITIAL CHLORINATION AND BACTERIA TESTING OF NEW WATER MAIN WORK, AND PRESSURE TEST RESULTS OF NEW WATER MAIN WORK. THE CONTRACTOR IS HEREBY ADVISED, THAT THE CWD WILL NOT BE RESPONSIBLE FOR THE CONTRACTOR'S SLIP IN PROJECT SCHEDULE IF THESE REQUIREMENTS FOR PERMITS ARE NOT FOLLOWED.
3. UNLESS OTHERWISE, NOTED, WATER MAINS SHALL BE INSTALLED WITH MINIMUM 5.0' COVER.
4. CONTRACTOR TO PROVIDE 1" CHLORINATION TAP AT ALL LOCATIONS WHERE PROPOSED WATER MAIN CONNECTS TO EXISTING WATER MAIN.
5. ALL ELBOWS, TEES, AND CONNECTIONS TO BE PROPERLY RETAINED PER THE CITY OF CAMBRIDGE WATER DEPARTMENT STANDARDS.
6. IF LOCATION OF EXISTING CURB STOP IS INACCESSIBLE FOR REPLACEMENT, CONTRACTOR TO COORDINATE WITH CWD TO DETERMINE LOCATION OF NEW CURB STOP PRIOR TO INSTALLATION.
7. ALL WATER SERVICE TO BE VERIFIED BY CONTRACTOR AND CONNECTED TO NEW WATER MAIN. EXISTING LEAD SERVICES IN THE STREET SHALL BE REMOVED AND REPLACED TO THE METER. CONTRACTOR SHALL CONDUCT TWO TEST PITS PER LEAD SERVICE. ONE AT THE CONNECTION AT THE MAIN AND OTHER WITHIN EXISTING SIDEWALK. ALL OTHER NON-COPPER SERVICES AND SERVICES UNDER 1" IN DIAMETER SHALL BE REPLACED TO THE BACK OF SIDEWALK WITH 1" SERVICES. ADDITIONAL LOCATIONS TO BE VERIFIED BY THE CONTRACTOR IN THE FIELD.
8. FOR WATER SERVICES GREATER THAN 1" IN SIZE, CONTRACTOR TO INSTALL VALVE AT THE MAIN PER DETAILS. WATER SERVICES 1-1/4" IN SIZE SHALL BE REPLACED TO THE BACK OF SIDEWALK WITH 1-1/2" SERVICES. ADDITIONAL LOCATIONS TO BE VERIFIED BY CONTRACTOR IN THE FIELD.
9. EXISTING WATER MAIN TO BE ABANDONED AFTER PROPOSED WATER MAIN IS INSTALLED.

ISSUED FOR BID

HDR ENGINEERING, INC.
99 HIGH STREET, SUITE 2300
BOSTON, MASSACHUSETTS 02110-2378
(617) 357-7700

COMMONWEALTH OF MASSACHUSETTS
PHILIP FUSCO
CIVIL
No. 45868
REGISTERED PROFESSIONAL ENGINEER

Scale			
Date			
Job No.			
Designed by			
Drawn by			
Checked by	No.	Description	Date
Approved by	REVISIONS		

THE WORKS — CAMBRIDGE DEPARTMENT OF PUBLIC

Client: CITY OF CAMBRIDGE, MA	Sheet: U1.08
Project: RIVER STREET INFRASTRUCTURE AND STREETSCAPE PROJECT	Total Sheets: 381
Drawing: **WATER MAIN AND UTILITY COORDINATION PLANS - 8**	File No.

File: C:\PW\WORKING\EAST01\D0786396\7113XXX_(UTILITY COORDINATION PLANS).DWG Plotted: 4/15/2022 2:53:46 PM

SEE SHEET U1.08

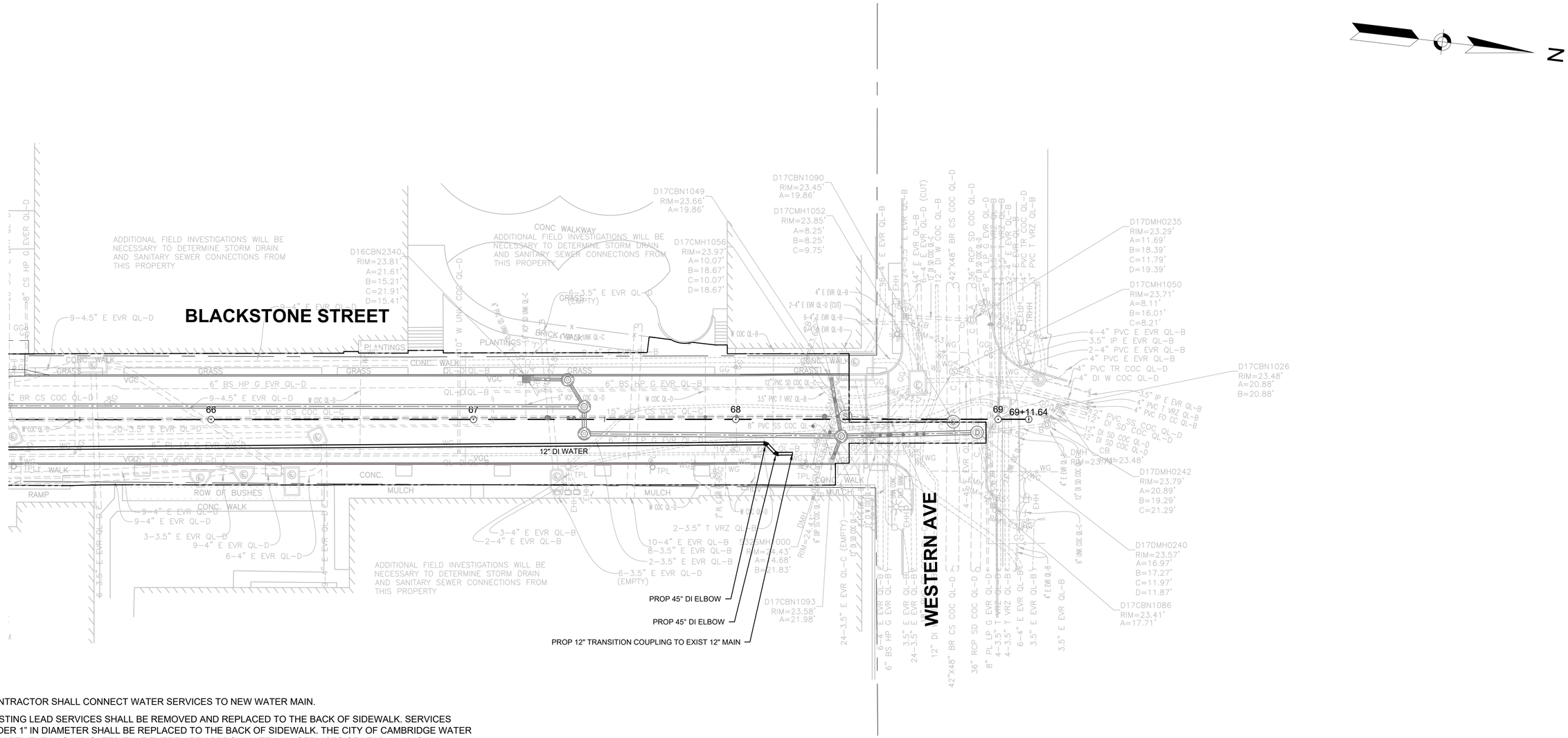

NOTES:

1. CONTRACTOR SHALL CONNECT WATER SERVICES TO NEW WATER MAIN.
2. EXISTING LEAD SERVICES SHALL BE REMOVED AND REPLACED TO THE BACK OF SIDEWALK. SERVICES UNDER 1" IN DIAMETER SHALL BE REPLACED TO THE BACK OF SIDEWALK. THE CITY OF CAMBRIDGE WATER DEPARTMENT HAS INDICATED THAT THERE ARE APPROXIMATELY 60 SERVICES OF LEAD, UNKNOWN MATERIAL, AND/OR ¾" SIZE WATER SERVICES WITHIN THE LIMITS OF THE PROJECT.
3. FOR WATER SERVICES GREATER THAN 1.5" IN SIZE, CONTRACTOR TO INSTALL GATE VALVE AT MAIN.
4. UNLESS OTHERWISE NOTED, WATER MAINS SHALL BE INSTALLED WITH MINIMUM 5.5' COVER FROM MEMORIAL DRIVE TO KINNAIRD STREET FROM EXISTING GRADE. WATER MAIN ELEVATIONS LISTED IN THE DRAWINGS REFER TO TOP OF WATER MAIN. UNLESS OTHERWISE INDICATED IN CONTRACT DRAWINGS OR APPROVED BY THE CAMBRIDGE WATER DEPARTMENT, WATER MAIN INSTALLED OUTSIDE RANGE OF 5'-7' COVER REQUIRES APROVAL FROM CWD.
5. CONTRACTOR TO PROVIDE 1" CHLORINATION TAP AT ALL LOCATIONS WHERE PROP. WATER MAIN CONNECTS TO EXISTING WATER MAIN.
6. WATER GATES, BOXES, HYDRANTS SHALL BE INSTALLED TO EXISTING GRADE AND ADJUSTED TO FINAL GRADE ELEVATIONS DURING SURFACE RESTORATION WORK.
7. ALL NEW AND RELOCATED HYDRANTS TO BE FLOW TESTED IN COORDINATION WITH THE CWD AND PAINTED PER THE CWD SPECIFICATIONS. CONTRACTOR TO COORDINATE WITH CWD FOR PAINT SPECIFICATIONS/COLOR.
8. REFER TO ROADWAY SHEETS FOR FINAL GRADES. CONTRACTOR TO COORDINATE STRUCTURE ADJUSTMENT WITH NSTAR ELECTRIC, VERIZON, COMCAST, OR ANY OTHER UTILITY COMPANIES.
9. EXISTING WATER MAIN TO BE ABANDONED AFTER PROPOSED WATER MAIN IS INSTALLED.

PLAN

0 20 50 100

SCALE: 1" = 20'

ISSUED FOR BID

HDR ENGINEERING, INC.
99 HIGH STREET, SUITE 2300
BOSTON, MASSACHUSETTS 02110-2378
(617) 357-7700

COMMONWEALTH OF MASSACHUSETTS
PHILIP FUSCO
CIVIL
No. 45868
REGISTERED PROFESSIONAL ENGINEER

Scale			
Date			
Job No.			
Designed by			
Drawn by			
Checked by	No.	Description	Date
Approved by	REVISIONS		

CAMBRIDGE DEPARTMENT OF PUBLIC WORKS

Client: CITY OF CAMBRIDGE, MA

Project: RIVER STREET
INFRASTRUCTURE AND STREETSCAPE PROJECT

Drawing: **WATER MAIN AND UTILITY COORDINATION PLANS - 9**

Sheet: U1.09

Total Sheets: 381

File No.

File: C:\PW\WORKING\EAST01\D0786396\7113XXX_(UTILITY COORDINATION PLANS).DWG Plotted: 4/15/2022 2:54:01 PM

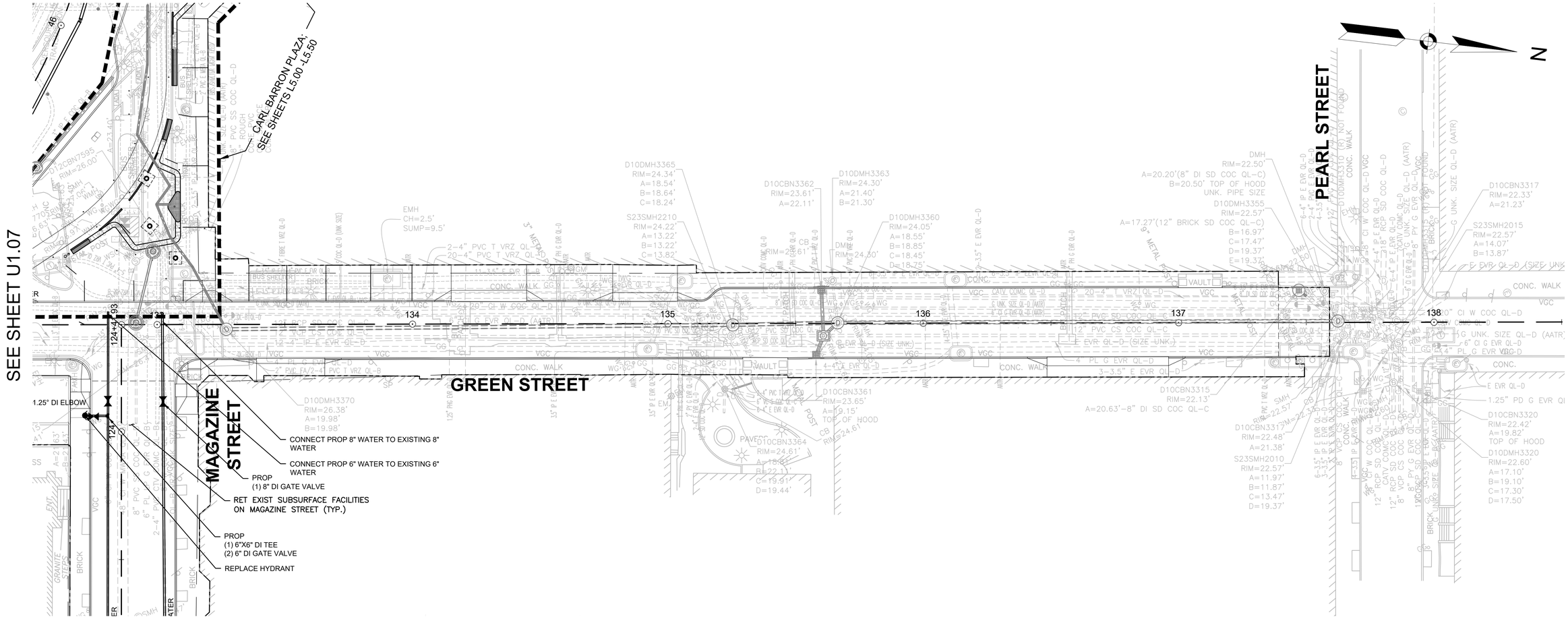

NOTES:

1. CONTRACTOR SHALL CONNECT WATER SERVICES TO NEW WATER MAIN.
2. EXISTING LEAD SERVICES SHALL BE REMOVED AND REPLACED TO THE BACK OF SIDEWALK. SERVICES UNDER 1" IN DIAMETER SHALL BE REPLACED TO THE BACK OF SIDEWALK. THE CITY OF CAMBRIDGE WATER DEPARTMENT HAS INDICATED THAT THERE ARE APPROXIMATELY 60 SERVICES OF LEAD, UNKNOWN MATERIAL, AND/OR ¾" SIZE WATER SERVICES WITHIN THE LIMITS OF THE PROJECT.
3. FOR WATER SERVICES GREATER THAN 1.5" IN SIZE, CONTRACTOR TO INSTALL GATE VALVE AT MAIN.
4. UNLESS OTHERWISE NOTED, WATER MAINS SHALL BE INSTALLED WITH MINIMUM 5.5' COVER FROM MEMORIAL DRIVE TO KINNAIRD STREET FROM EXISTING GRADE. WATER MAIN ELEVATIONS LISTED IN THE DRAWINGS REFER TO TOP OF WATER MAIN. UNLESS OTHERWISE INDICATED IN CONTRACT DRAWINGS OR APPROVED BY THE CAMBRIDGE WATER DEPARTMENT, WATER MAIN INSTALLED OUTSIDE RANGE OF 5'-7' COVER REQUIRES APROVAL FROM CWD.
5. CONTRACTOR TO PROVIDE 1" CHLORINATION TAP AT ALL LOCATIONS WHERE PROP. WATER MAIN CONNECTS TO EXISTING WATER MAIN.
6. WATER GATES, BOXES, HYDRANTS SHALL BE INSTALLED TO EXISTING GRADE AND ADJUSTED TO FINAL GRADE ELEVATIONS DURING SURFACE RESTORATION WORK.
7. ALL NEW AND RELOCATED HYDRANTS TO BE FLOW TESTED IN COORDINATION WITH THE CWD AND PAINTED PER THE CWD SPECIFICATIONS. CONTRACTOR TO COORDINATE WITH CWD FOR PAINT SPECIFICATIONS/COLOR.
8. REFER TO ROADWAY SHEETS FOR FINAL GRADES. CONTRACTOR TO COORDINATE STRUCTURE ADJUSTMENT WITH NSTAR ELECTRIC, VERIZON, COMCAST, OR ANY OTHER UTILITY COMPANIES.
9. EXISTING WATER MAIN TO BE ABANDONED AFTER PROPOSED WATER MAIN IS INSTALLED.

PLAN

0 20 50 100

SCALE: 1" = 20'

ISSUED FOR BID

HDR ENGINEERING, INC.
99 HIGH STREET, SUITE 2300
BOSTON, MASSACHUSETTS 02110-2378
(617) 357-7700

PHILIP FUSCO CIVIL No. 45868 REGISTERED PROFESSIONAL ENGINEER
COMMONWEALTH OF MASSACHUSETTS

Scale			
Date			
Job No.			
Designed by			
Drawn by			
Checked by	No.	Description	Date
Approved by	REVISIONS		

THE WORKS — CAMBRIDGE DEPARTMENT OF PUBLIC WORKS

Client: CITY OF CAMBRIDGE, MA	Sheet: U1.10
Project: RIVER STREET INFRASTRUCTURE AND STREETSCAPE PROJECT	Total Sheets: 381
Drawing: **WATER MAIN AND UTILITY COORDINATION PLANS - 10**	File No.

File: C:\PW\WORKING\EAST01\D0786396\7113XXX_(UTILITY COORDINATION PLANS).DWG Plotted: 4/15/2022 2:54:16 PM

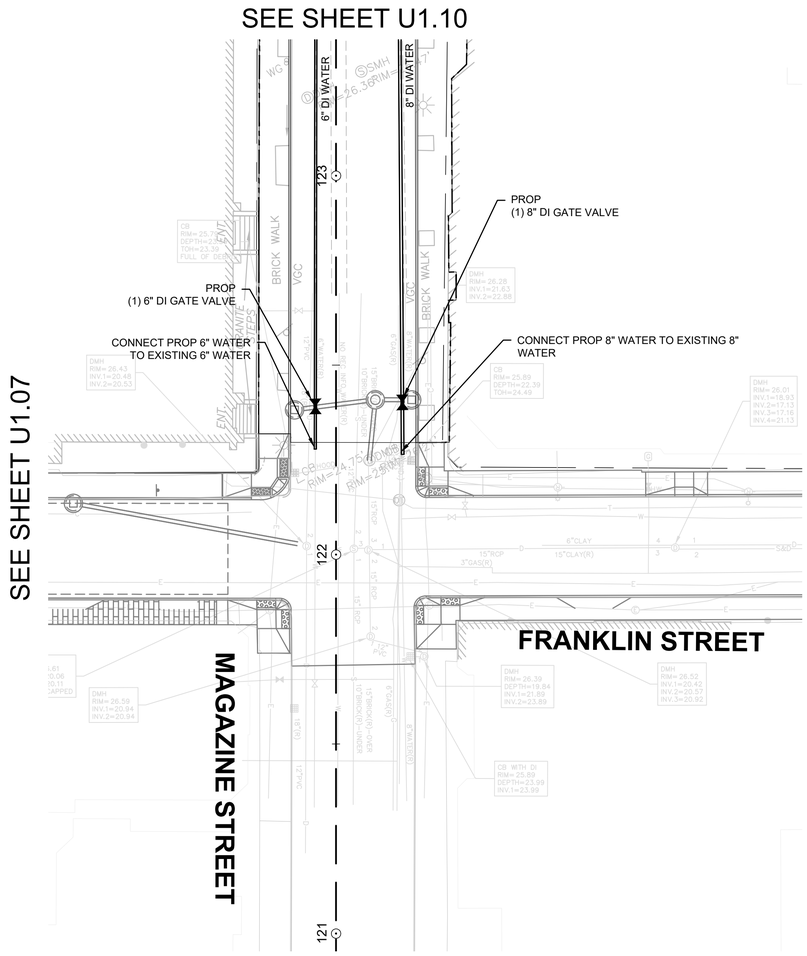

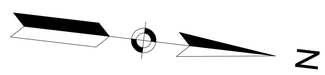

NOTES:

1. CONTRACTOR SHALL CONNECT WATER SERVICES TO NEW WATER MAIN.
2. EXISTING LEAD SERVICES SHALL BE REMOVED AND REPLACED TO THE BACK OF SIDEWALK. SERVICES UNDER 1" IN DIAMETER SHALL BE REPLACED TO THE BACK OF SIDEWALK. THE CITY OF CAMBRIDGE WATER DEPARTMENT HAS INDICATED THAT THERE ARE APPROXIMATELY 60 SERVICES OF LEAD, UNKNOWN MATERIAL, AND/OR ¾" SIZE WATER SERVICES WITHIN THE LIMITS OF THE PROJECT.
3. FOR WATER SERVICES GREATER THAN 1.5" IN SIZE, CONTRACTOR TO INSTALL GATE VALVE AT MAIN.
4. UNLESS OTHERWISE NOTED, WATER MAINS SHALL BE INSTALLED WITH MINIMUM 5.5' COVER FROM MEMORIAL DRIVE TO KINNAIRD STREET FROM EXISTING GRADE. WATER MAIN ELEVATIONS LISTED IN THE DRAWINGS REFER TO TOP OF WATER MAIN. UNLESS OTHERWISE INDICATED IN CONTRACT DRAWINGS OR APPROVED BY THE CAMBRIDGE WATER DEPARTMENT, WATER MAIN INSTALLED OUTSIDE RANGE OF 5'-7' COVER REQUIRES APROVAL FROM CWD.
5. CONTRACTOR TO PROVIDE 1" CHLORINATION TAP AT ALL LOCATIONS WHERE PROP. WATER MAIN CONNECTS TO EXISTING WATER MAIN.
6. WATER GATES, BOXES, HYDRANTS SHALL BE INSTALLED TO EXISTING GRADE AND ADJUSTED TO FINAL GRADE ELEVATIONS DURING SURFACE RESTORATION WORK.
7. ALL NEW AND RELOCATED HYDRANTS TO BE FLOW TESTED IN COORDINATION WITH THE CWD AND PAINTED PER THE CWD SPECIFICATIONS. CONTRACTOR TO COORDINATE WITH CWD FOR PAINT SPECIFICATIONS/COLOR.
8. REFER TO ROADWAY SHEETS FOR FINAL GRADES. CONTRACTOR TO COORDINATE STRUCTURE ADJUSTMENT WITH NSTAR ELECTRIC, VERIZON, COMCAST, OR ANY OTHER UTILITY COMPANIES.

PLAN

0 20 50 100

SCALE: 1" = 20'

ISSUED FOR BID

HDR ENGINEERING, INC.
99 HIGH STREET, SUITE 2300
BOSTON, MASSACHUSETTS 02110–2378
(617) 357–7700

COMMONWEALTH OF MASSACHUSETTS
PHILIP FUSCO CIVIL No. 45868
REGISTERED PROFESSIONAL ENGINEER

Scale			
Date			
Job No.			
Designed by			
Drawn by			
Checked by	No.	Description	Date
Approved by	REVISIONS		

THE WORKS — CAMBRIDGE DEPARTMENT OF PUBLIC

Client: CITY OF CAMBRIDGE, MA

Project: RIVER STREET
INFRASTRUCTURE AND STREETSCAPE PROJECT

Drawing: **WATER MAIN AND UTILITY COORDINATION PLANS - 11**

Sheet: U1.11

Total Sheets: 381

File No.

4/15/2022 2:54:31 PM

File: C:\PWWORKING\EAST\D1D0786396\7113XXX_(UTILITY COORDINATION PLANS).DWG Plotted:

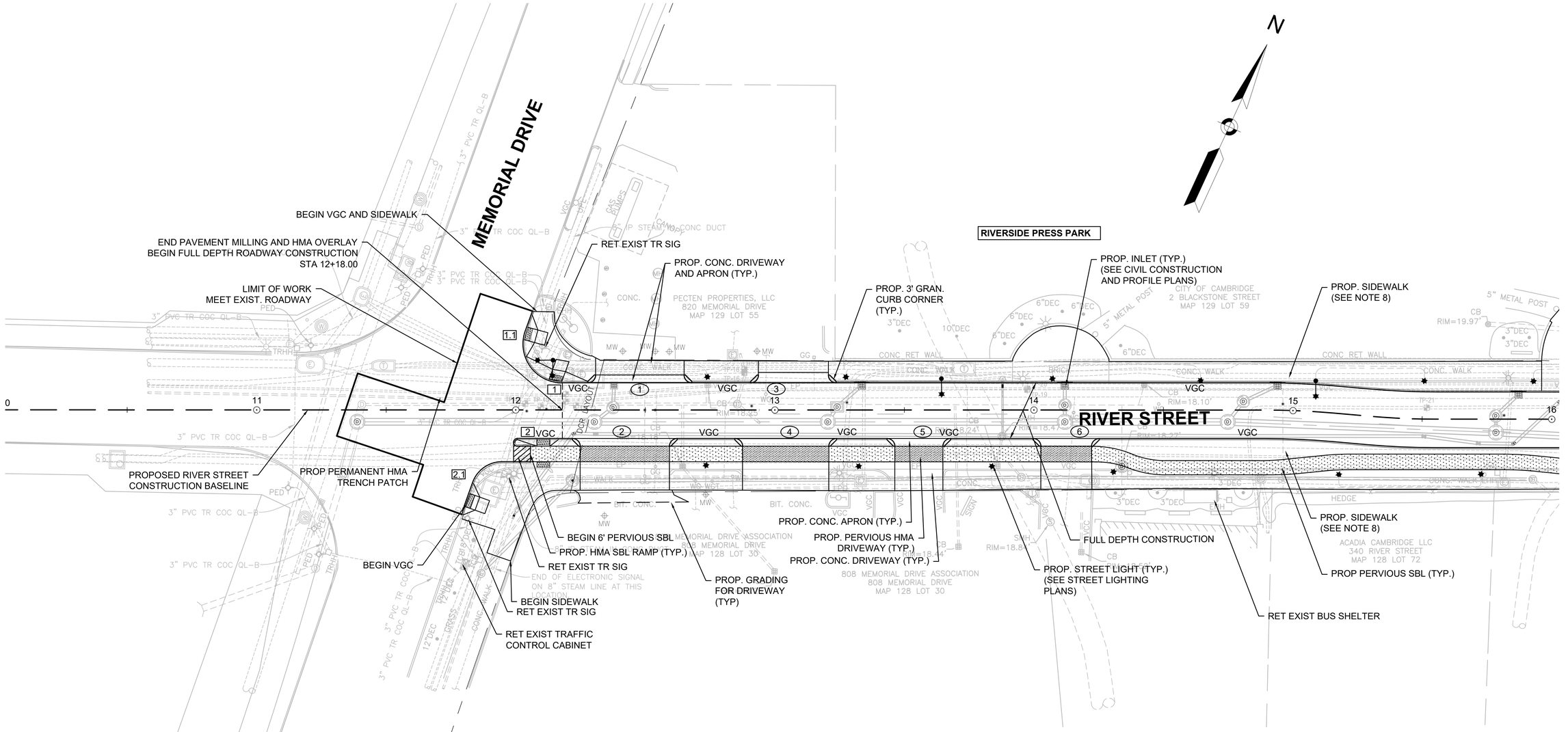

LEGEND:

- 9 — RAMP NUMBER
- 10 — DRIVEWAY NUMBER
- PERMEABLE ASPHALT
- PERMEABLE ASPHALT DRIVEWAY
- HMA SBL RAMP

PLAN

0 20 50 100

SCALE: 1" = 20'

NOTES:

1. SEE DETAILS FOR CURB INSTALLATION, PEDESTRIAN RAMP, DRIVEWAY, AND SIDEWALK CONSTRUCTION DETAILS.
2. CONTRACTOR SHALL ADJUST EXISTING CITY OWNED UTILITY COVERS AND CASTINGS TO RE-GRADED SURFACES. THE CONTRACTOR TO COORDINATE WITH RESPECTIVE UTILITIES COMPANIES FOR GAS/TELECOM/CABLE/ELECTRIC.
3. ALL VERTICAL GRANITE CURBING MEETING THE SPECIFICATIONS AND WITH APPROVAL OF THE OWNER SHALL BE REMOVED AND RESET UNLESS OTHERWISE NOTED.
4. ALL EXISTING FEATURES AT BACK OF SIDEWALK SHALL REMAIN IN PLACE UNLESS OTHERWISE NOTED. DAMAGES OR DISLODGING OF FEATURES AT BACK OF SIDEWALK SHALL BE REPAIRED/REPLACED BY THE CONTRACTOR AT NO ADDITIONAL COST TO THE PRIVATE PROPERTY OWNER OR OWNERS.
5. CONTRACTOR SHALL MATCH THE EXISTING GRADE AT THE LIMIT OF PROPOSED COLD PLANE AND OVERLAY. THE JOINT BETWEEN EXISTING AND PROPOSED PAVEMENT SHALL BE TREATED WITH INFRARED PAVEMENT SEALANT AND HOT POURED RUBBERIZED ASPHALT SEALER.
6. CONTRACTOR SHALL REMOVE ALL EXISTING SIGNS FROM UTILITY POLES. REFER TO SHEETS TR-1.01 TO TR-1.10 FOR PROPOSED SIGNS AND THEIR LOCATIONS.
7. CONTRACTOR SHALL NOT PERFORM ANY WORK ON PRIVATE PROPERTY UNTIL A SIGNED RIGHT-OF-ENTRY (ROE) IS RECEIVED BY DPW FROM THE PROPERTY OWNER. THE CONTRACTOR IS RESPONSIBLE FOR COORDINATING WITH THE PROPERTY OWNER.
8. SEE STREETSCAPE PLANS FOR SIDEWALK MATERIALS, PLANTINGS, AND STREET FURNISHINGS

ISSUED FOR BID

HDR ENGINEERING, INC.
99 HIGH STREET, SUITE 2300
BOSTON, MASSACHUSETTS 02110-2378
(617) 357-7700

PHILIP FUSCO CIVIL No. 45868 REGISTERED PROFESSIONAL ENGINEER COMMONWEALTH OF MASSACHUSETTS

Scale			
Date			
Job No.			
Designed by			
Drawn by			
Checked by	No.	Description	Date
Approved by	REVISIONS		

THE WORKS — CAMBRIDGE DEPARTMENT OF PUBLIC WORKS

Client: CITY OF CAMBRIDGE, MA	Sheet: R-1.01
Project: RIVER STREET INFRASTRUCTURE AND STREETSCAPE PROJECT	Total Sheets: 381
Drawing: **ROADWAY CONSTRUCTION PLAN - 1**	File No.

File: C:\PWWORKING\EAST\01D0786396\17113XXX_(CONSTRUCTION PLANS).DWG Plotted: 4/15/2022 2:56:26 PM

SEE SHEET R-1.08

SEE SHEET R-1.01

SEE SHEET R-1.03

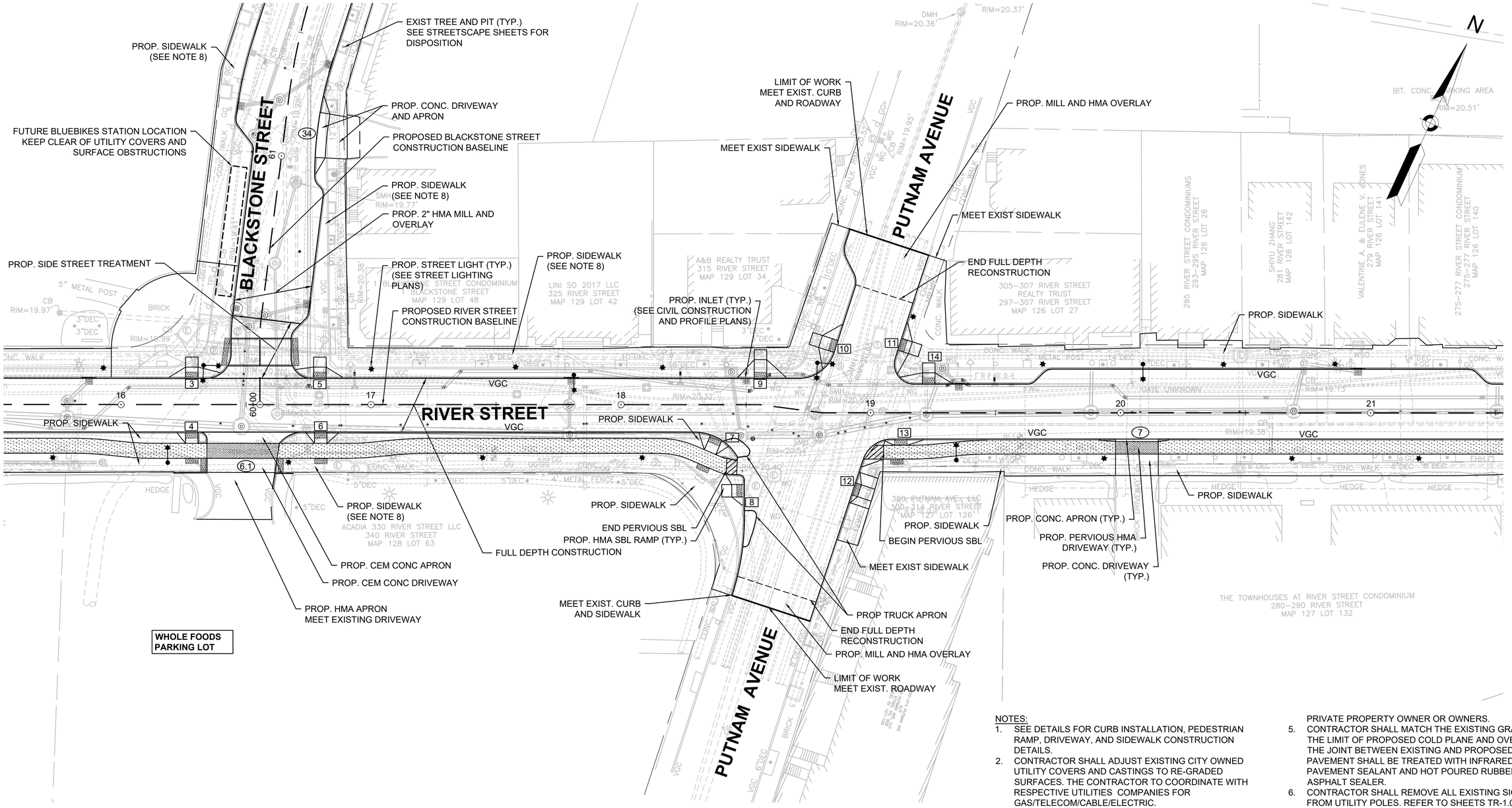

LEGEND:

- 9 — RAMP NUMBER
- 10 — DRIVEWAY NUMBER
- PERMEABLE ASPHALT
- PERMEABLE ASPHALT DRIVEWAY
- HMA SBL RAMP

PLAN

0 20 50 100

SCALE: 1" = 20'

NOTES:

1. SEE DETAILS FOR CURB INSTALLATION, PEDESTRIAN RAMP, DRIVEWAY, AND SIDEWALK CONSTRUCTION DETAILS.
2. CONTRACTOR SHALL ADJUST EXISTING CITY OWNED UTILITY COVERS AND CASTINGS TO RE-GRADED SURFACES. THE CONTRACTOR TO COORDINATE WITH RESPECTIVE UTILITIES COMPANIES FOR GAS/TELECOM/CABLE/ELECTRIC.
3. ALL VERTICAL GRANITE CURBING MEETING THE SPECIFICATIONS AND WITH APPROVAL OF THE OWNER SHALL BE REMOVED AND RESET UNLESS OTHERWISE NOTED.
4. ALL EXISTING FEATURES AT BACK OF SIDEWALK SHALL REMAIN IN PLACE UNLESS OTHERWISE NOTED. DAMAGES OR DISLODGING OF FEATURES AT BACK OF SIDEWALK SHALL BE REPAIRED/REPLACED BY THE CONTRACTOR AT NO ADDITIONAL COST TO THE PRIVATE PROPERTY OWNER OR OWNERS.
5. CONTRACTOR SHALL MATCH THE EXISTING GRADE AT THE LIMIT OF PROPOSED COLD PLANE AND OVERLAY. THE JOINT BETWEEN EXISTING AND PROPOSED PAVEMENT SHALL BE TREATED WITH INFRARED PAVEMENT SEALANT AND HOT POURED RUBBERIZED ASPHALT SEALER.
6. CONTRACTOR SHALL REMOVE ALL EXISTING SIGNS FROM UTILITY POLES. REFER TO SHEETS TR-1.01 TO TR-1.10 FOR PROPOSED SIGNS AND THEIR LOCATIONS.
7. CONTRACTOR SHALL NOT PERFORM ANY WORK ON PRIVATE PROPERTY UNTIL A SIGNED RIGHT-OF-ENTRY (ROE) IS RECEIVED BY DPW FROM THE PROPERTY OWNER. THE CONTRACTOR IS RESPONSIBLE FOR COORDINATING WITH THE PROPERTY OWNER.
8. SEE STREETSCAPE PLANS FOR SIDEWALK MATERIALS, PLANTINGS, AND STREET FURNISHINGS

ISSUED FOR BID

HDR ENGINEERING, INC.
99 HIGH STREET, SUITE 2300
BOSTON, MASSACHUSETTS 02110–2378
(617) 357–7700

PHILIP FUSCO CIVIL No. 45868 REGISTERED PROFESSIONAL ENGINEER COMMONWEALTH OF MASSACHUSETTS

Scale			
Date			
Job No.			
Designed by			
Drawn by			
Checked by	No.	Description	Date
Approved by	REVISIONS		

THE WORKS — CAMBRIDGE DEPARTMENT OF PUBLIC WORKS

Client: CITY OF CAMBRIDGE, MA

Project: RIVER STREET INFRASTRUCTURE AND STREETSCAPE PROJECT

Drawing: **ROADWAY CONSTRUCTION PLAN - 2**

Sheet: R-1.02

Total Sheets: 381

File No.

File: C:\PWWORKING\EAST\01D0786396\7113XXX_(CONSTRUCTION PLANS).DWG Plotted: 4/15/2022 2:56:37 PM

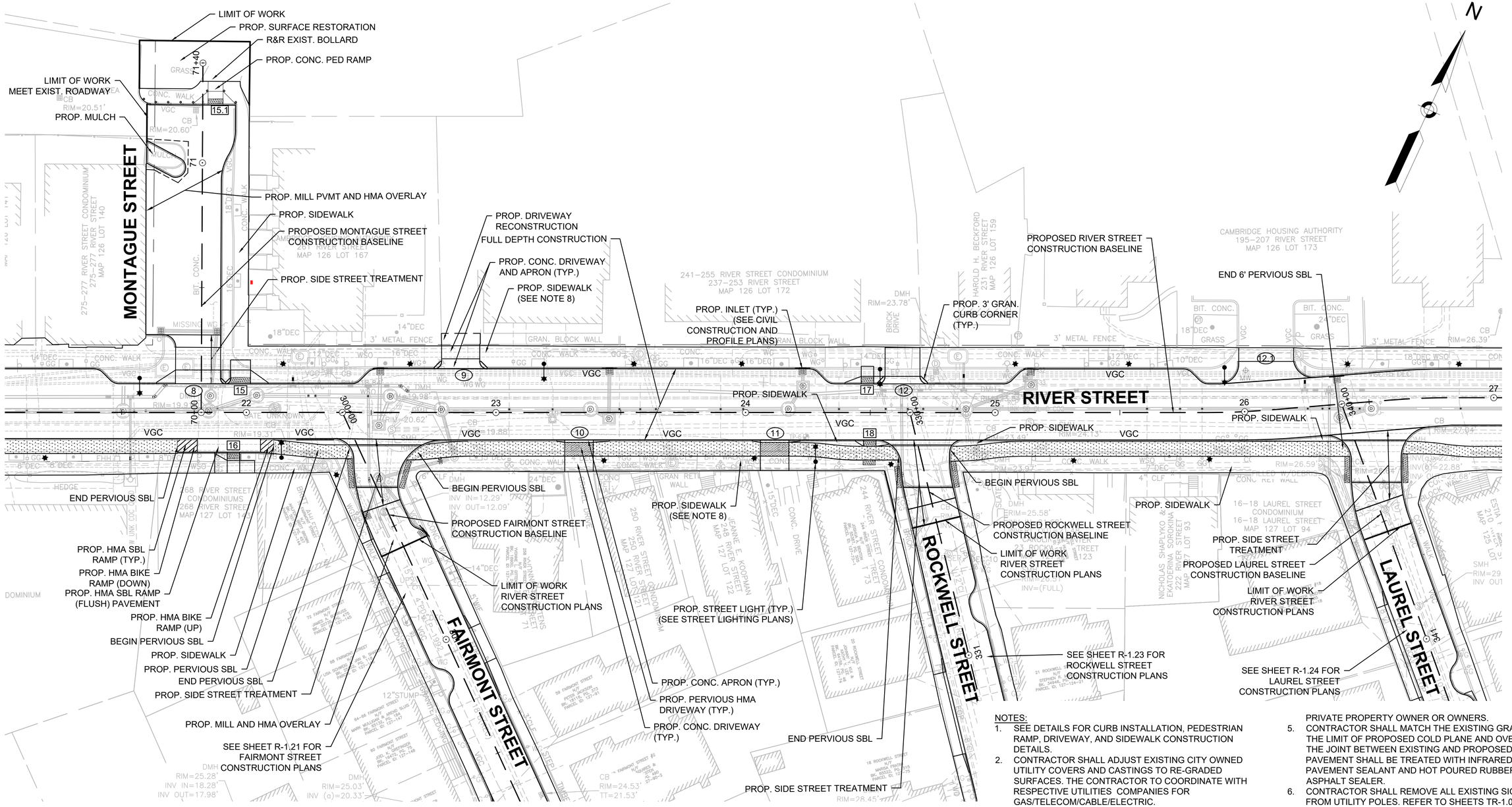

LEGEND:

- 9 — RAMP NUMBER
- 10 — DRIVEWAY NUMBER
- PERMEABLE ASPHALT
- PERMEABLE ASPHALT DRIVEWAY
- HMA SBL RAMP

NOTES:

1. SEE DETAILS FOR CURB INSTALLATION, PEDESTRIAN RAMP, DRIVEWAY, AND SIDEWALK CONSTRUCTION DETAILS.
2. CONTRACTOR SHALL ADJUST EXISTING CITY OWNED UTILITY COVERS AND CASTINGS TO RE-GRADED SURFACES. THE CONTRACTOR TO COORDINATE WITH RESPECTIVE UTILITIES COMPANIES FOR GAS/TELECOM/CABLE/ELECTRIC.
3. ALL VERTICAL GRANITE CURBING MEETING THE SPECIFICATIONS AND WITH APPROVAL OF THE OWNER SHALL BE REMOVED AND RESET UNLESS OTHERWISE NOTED.
4. ALL EXISTING FEATURES AT BACK OF SIDEWALK SHALL REMAIN IN PLACE UNLESS OTHERWISE NOTED. DAMAGES OR DISLODGING OF FEATURES AT BACK OF SIDEWALK SHALL BE REPAIRED/REPLACED BY THE CONTRACTOR AT NO ADDITIONAL COST TO THE PRIVATE PROPERTY OWNER OR OWNERS.
5. CONTRACTOR SHALL MATCH THE EXISTING GRADE AT THE LIMIT OF PROPOSED COLD PLANE AND OVERLAY. THE JOINT BETWEEN EXISTING AND PROPOSED PAVEMENT SHALL BE TREATED WITH INFRARED PAVEMENT SEALANT AND HOT POURED RUBBERIZED ASPHALT SEALER.
6. CONTRACTOR SHALL REMOVE ALL EXISTING SIGNS FROM UTILITY POLES. REFER TO SHEETS TR-1.01 TO TR-1.10 FOR PROPOSED SIGNS AND THEIR LOCATIONS.
7. CONTRACTOR SHALL NOT PERFORM ANY WORK ON PRIVATE PROPERTY UNTIL A SIGNED RIGHT-OF-ENTRY (ROE) IS RECEIVED BY DPW FROM THE PROPERTY OWNER. THE CONTRACTOR IS RESPONSIBLE FOR COORDINATING WITH THE PROPERTY OWNER.
8. SEE STREETSCAPE PLANS FOR SIDEWALK MATERIALS, PLANTINGS, AND STREET FURNISHINGS

PLAN

0 20 50 100

SCALE: 1" = 20'

ISSUED FOR BID

HDR ENGINEERING, INC.
99 HIGH STREET, SUITE 2300
BOSTON, MASSACHUSETTS 02110-2378
(617) 357-7700

PHILIP FUSCO CIVIL No. 45868 REGISTERED PROFESSIONAL ENGINEER
COMMONWEALTH OF MASSACHUSETTS

Scale			
Date			
Job No.			
Designed by			
Drawn by			
Checked by	No.	Description	Date
Approved by	REVISIONS		

THE WORKS — CAMBRIDGE DEPARTMENT OF PUBLIC

Client	CITY OF CAMBRIDGE, MA	Sheet	R-1.03
Project	RIVER STREET INFRASTRUCTURE AND STREETSCAPE PROJECT	Total Sheets	381
Drawing	**ROADWAY CONSTRUCTION PLAN - 3**	File No.	

File: C:\PW\WORKING\EAST01\D0786396\I7113XXX_(CONSTRUCTION PLANS).DWG Plotted: 4/15/2022 2:56:47 PM

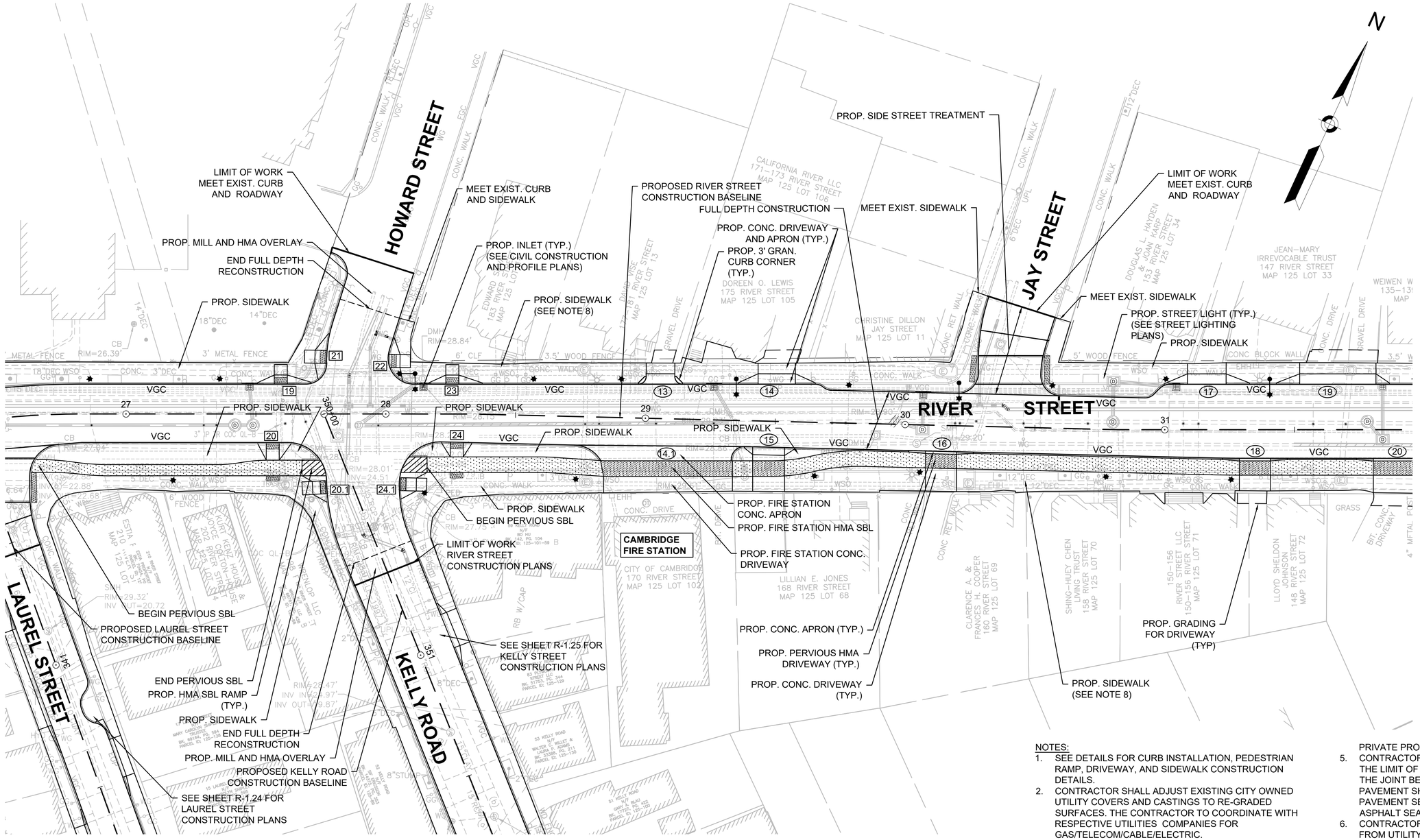

LEGEND:

- 9 — RAMP NUMBER
- (10) — DRIVEWAY NUMBER
- PERMEABLE ASPHALT
- PERMEABLE ASPHALT DRIVEWAY
- HMA SBL RAMP

PLAN

0 20 50 100

SCALE: 1" = 20'

NOTES:

1. SEE DETAILS FOR CURB INSTALLATION, PEDESTRIAN RAMP, DRIVEWAY, AND SIDEWALK CONSTRUCTION DETAILS.
2. CONTRACTOR SHALL ADJUST EXISTING CITY OWNED UTILITY COVERS AND CASTINGS TO RE-GRADED SURFACES. THE CONTRACTOR TO COORDINATE WITH RESPECTIVE UTILITIES COMPANIES FOR GAS/TELECOM/CABLE/ELECTRIC.
3. ALL VERTICAL GRANITE CURBING MEETING THE SPECIFICATIONS AND WITH APPROVAL OF THE OWNER SHALL BE REMOVED AND RESET UNLESS OTHERWISE NOTED.
4. ALL EXISTING FEATURES AT BACK OF SIDEWALK SHALL REMAIN IN PLACE UNLESS OTHERWISE NOTED. DAMAGES OR DISLODGING OF FEATURES AT BACK OF SIDEWALK SHALL BE REPAIRED/REPLACED BY THE CONTRACTOR AT NO ADDITIONAL COST TO THE PRIVATE PROPERTY OWNER OR OWNERS.
5. CONTRACTOR SHALL MATCH THE EXISTING GRADE AT THE LIMIT OF PROPOSED COLD PLANE AND OVERLAY. THE JOINT BETWEEN EXISTING AND PROPOSED PAVEMENT SHALL BE TREATED WITH INFRARED PAVEMENT SEALANT AND HOT POURED RUBBERIZED ASPHALT SEALER.
6. CONTRACTOR SHALL REMOVE ALL EXISTING SIGNS FROM UTILITY POLES. REFER TO SHEETS TR-1.01 TO TR-1.10 FOR PROPOSED SIGNS AND THEIR LOCATIONS.
7. CONTRACTOR SHALL NOT PERFORM ANY WORK ON PRIVATE PROPERTY UNTIL A SIGNED RIGHT-OF-ENTRY (ROE) IS RECEIVED BY DPW FROM THE PROPERTY OWNER. THE CONTRACTOR IS RESPONSIBLE FOR COORDINATING WITH THE PROPERTY OWNER.
8. SEE STREETSCAPE PLANS FOR SIDEWALK MATERIALS, PLANTINGS, AND STREET FURNISHINGS

ISSUED FOR BID

HDR
HDR ENGINEERING, INC.
99 HIGH STREET, SUITE 2300
BOSTON, MASSACHUSETTS 02110-2378
(617) 357-7700

COMMONWEALTH OF MASSACHUSETTS
PHILIP FUSCO
CIVIL
No. 45868
REGISTERED PROFESSIONAL ENGINEER

Scale			
Date			
Job No.			
Designed by			
Drawn by			
Checked by	No.	Description	Date
Approved by	REVISIONS		

THE WORKS — CAMBRIDGE DEPARTMENT OF PUBLIC WORKS

Client: CITY OF CAMBRIDGE, MA	Sheet: R-1.04
Project: RIVER STREET INFRASTRUCTURE AND STREETSCAPE PROJECT	Total Sheets: 381
Drawing: **ROADWAY CONSTRUCTION PLAN - 4**	File No.

File: C:\PWWORKING\EAST\D1\D0786396\I7113XXX_(CONSTRUCTION PLANS).DWG Plotted: 4/15/2022 2:56:57 PM

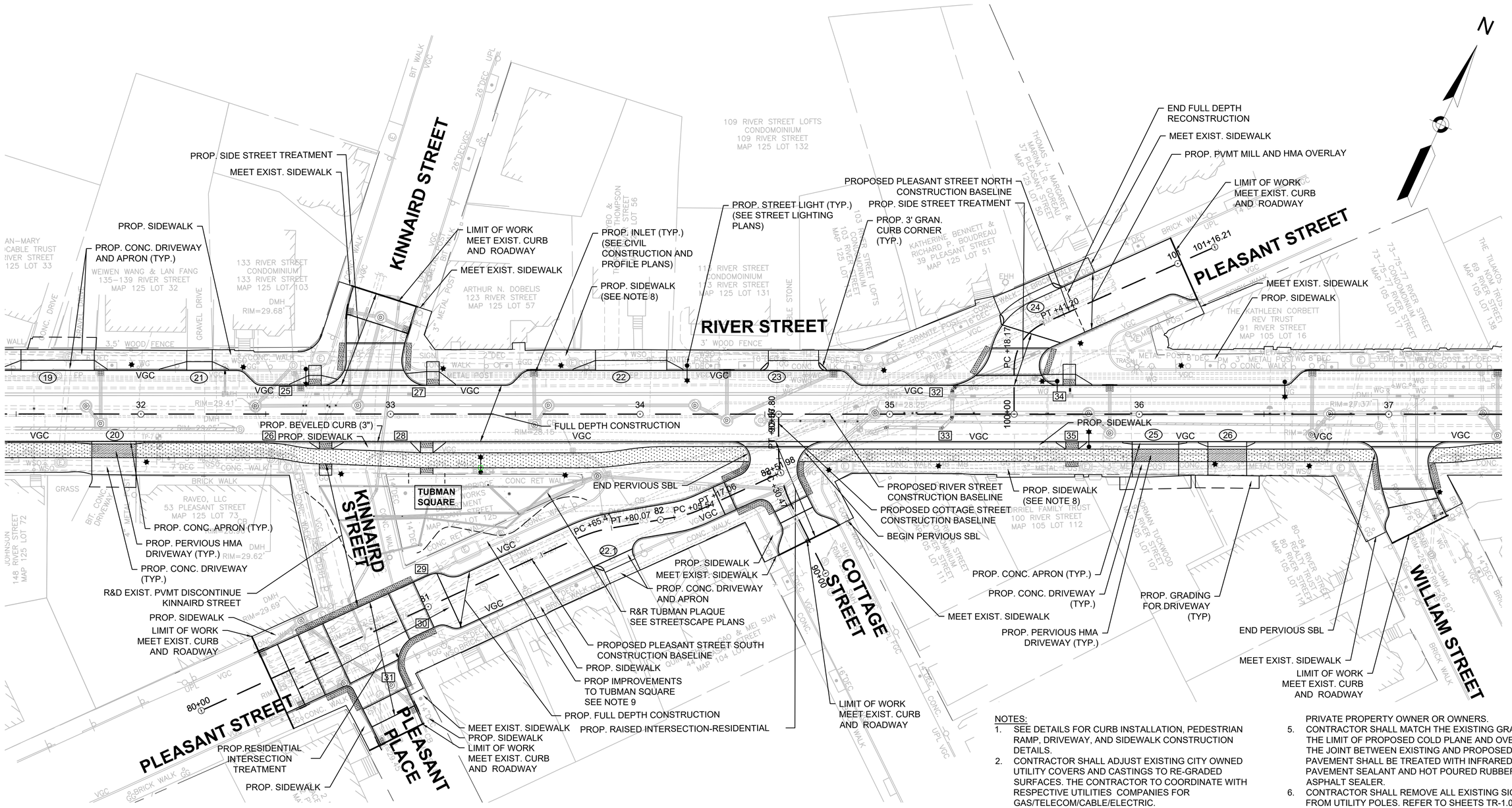

SEE SHEET R-1.04

SEE SHEET R-1.06

LEGEND:

- 9 — RAMP NUMBER
- 10 — DRIVEWAY NUMBER
- PERMEABLE ASPHALT
- PERMEABLE ASPHALT DRIVEWAY
- HMA SBL RAMP

PLAN

0 20 50 100

SCALE: 1" = 20'

NOTES:

1. SEE DETAILS FOR CURB INSTALLATION, PEDESTRIAN RAMP, DRIVEWAY, AND SIDEWALK CONSTRUCTION DETAILS.
2. CONTRACTOR SHALL ADJUST EXISTING CITY OWNED UTILITY COVERS AND CASTINGS TO RE-GRADED SURFACES. THE CONTRACTOR TO COORDINATE WITH RESPECTIVE UTILITIES COMPANIES FOR GAS/TELECOM/CABLE/ELECTRIC.
3. ALL VERTICAL GRANITE CURBING MEETING THE SPECIFICATIONS AND WITH APPROVAL OF THE OWNER SHALL BE REMOVED AND RESET UNLESS OTHERWISE NOTED.
4. ALL EXISTING FEATURES AT BACK OF SIDEWALK SHALL REMAIN IN PLACE UNLESS OTHERWISE NOTED. DAMAGES OR DISLODGING OF FEATURES AT BACK OF SIDEWALK SHALL BE REPAIRED/REPLACED BY THE CONTRACTOR AT NO ADDITIONAL COST TO THE PRIVATE PROPERTY OWNER OR OWNERS.
5. CONTRACTOR SHALL MATCH THE EXISTING GRADE AT THE LIMIT OF PROPOSED COLD PLANE AND OVERLAY. THE JOINT BETWEEN EXISTING AND PROPOSED PAVEMENT SHALL BE TREATED WITH INFRARED PAVEMENT SEALANT AND HOT POURED RUBBERIZED ASPHALT SEALER.
6. CONTRACTOR SHALL REMOVE ALL EXISTING SIGNS FROM UTILITY POLES. REFER TO SHEETS TR-1.01 TO TR-1.10 FOR PROPOSED SIGNS AND THEIR LOCATIONS.
7. CONTRACTOR SHALL NOT PERFORM ANY WORK ON PRIVATE PROPERTY UNTIL A SIGNED RIGHT-OF-ENTRY (ROE) IS RECEIVED BY DPW FROM THE PROPERTY OWNER. THE CONTRACTOR IS RESPONSIBLE FOR COORDINATING WITH THE PROPERTY OWNER.
8. SEE STREETSCAPE PLANS FOR SIDEWALK MATERIALS, PLANTINGS, AND STREET FURNISHINGS
9. SEE TUBMAN SQUARE STREETSCAPE PLANS

ISSUED FOR BID

HDR ENGINEERING, INC.
99 HIGH STREET, SUITE 2300
BOSTON, MASSACHUSETTS 02110–2378
(617) 357–7700

COMMONWEALTH OF MASSACHUSETTS
PHILIP FUSCO
CIVIL
No. 45868
REGISTERED PROFESSIONAL ENGINEER

Scale			
Date			
Job No.			
Designed by			
Drawn by			
Checked by	No.	Description	Date
Approved by	REVISIONS		

THE WORKS — CAMBRIDGE DEPARTMENT OF PUBLIC WORKS

Client: CITY OF CAMBRIDGE, MA

Project: RIVER STREET
INFRASTRUCTURE AND STREETSCAPE PROJECT

Drawing: **ROADWAY CONSTRUCTION PLAN - 5**

Sheet: R-1.05

Total Sheets: 381

File No.

File: C:\PWWORKING\EAST01\D07863961713XXX_(CONSTRUCTION PLANS).DWG Plotted: 4/15/2022 2:57:08 PM

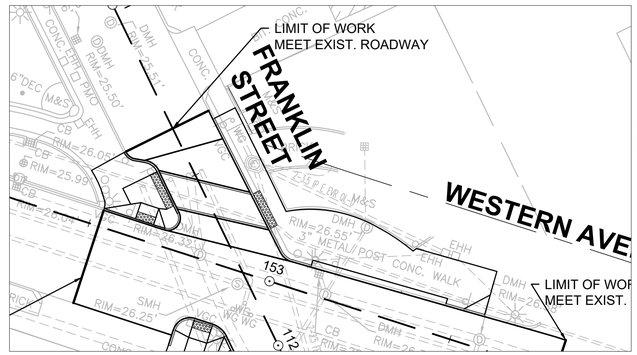

INSET A

SEE INSET A

SEE SHEET R-1.05

SEE SHEET R-1.07

N

AUBURN STREET

WILLIAM STREET

RIVER STREET

FRANKLIN STREET

WESTERN AVENUE

LIMIT OF WORK
MEET EXIST. ROADWAY

LIMIT OF WORK TO
SUPPORT WESTERN
AVENUE TRAFFIC SIGNAL
CONSTRUCTION

LIMIT OF WORK
MEET EXIST. CURB
AND ROADWAY

MEET EXIST. SIDEWALK

MEET EXIST. SIDEWALK

PROP. SIDE STREET TREATMENT

PROP. 3' GRAN.
CURB CORNER
(TYP.)

PROP. INLET (TYP.)
(SEE CIVIL CONSTRUCTION
AND PROFILE PLANS)

PROP. SIDEWALK

PROP. SIDEWALK

RET EXIST.
CURB

MEET EXIST. SIDEWALK

PROP. SIDEWALK

PROP. CONC DRIVEWAY
AND APRON

MEET EXIST. DRIVEWAY

RET. EXIST. SIDEWALK
AND DRIVEWAY

PROP. SIDEWALK
(SEE NOTE 8)

END FULL DEPTH
RECONSTRUCTION

RET. BACK OF
SIDEWALK CURB

PROP. PVMT MILL
AND HMA OVERLAY

PROP. SIDEWALK

RET EXIST. GRAN
RETAINING WALL

FULL DEPTH CONSTRUCTION

FULL DEPTH CONSTRUCTION

PROP. SIDEWALK

PROP. SIDEWALK

BEGIN PERVIOUS SBL

MEET EXIST. SIDEWALK

PROP. SIDEWALK

PROPOSED RIVER STREET
CONSTRUCTION BASELINE

END PERVIOUS SBL

BEGIN PERVIOUS SBL

PROP. SIDEWALK
(SEE NOTE 8)

END PERVIOUS SBL

PROP. HMA SBL RAMP
(TYP.)

PROPOSED FRANKLIN STREET
CONSTRUCTION BASELINE

END FULL DEPTH
RECONSTRUCTION

PROP. MILL AND HMA OVERLAY

PROP. SIDE STREET TREATMENT

MEET EXIST. SIDEWALK

LIMIT OF WORK
MEET EXIST. CURB
AND ROADWAY

MEET EXIST. SIDEWALK

LIMIT OF WORK
MEET EXIST. ROADWAY

PROP. STREET LIGHT (TYP.)
(SEE STREET LIGHTING PLANS)

PROP. CONC. APRON (TYP.)

PROP. PERVIOUS HMA
DRIVEWAY (TYP.)

PROP. CONC. DRIVEWAY (TYP.)

CAMBRIDGE COMMUNITY PROPERTIES
LIMITED PARTNERSHIP
49 RIVER STREET
MAP 105 LOT 55

TSUNG-CHIH TSAI
64-66 WESTERN AVENUE
MAP 105 LOT 134

56-58 WESTERN AVENUE CONDOMINIUM
56-58 WESTERN AVENUE
MAP 105 LOT 130

73-75-77 RIVER STREET
CONDOMINIUM TRUST
73-75-77 RIVER STREET
MAP 105 LOT 17

TILLMOS RIVER STREET
69 RIVER STREET
MAP 105 LOT 138

67 RIVER STREET TRUST
67 RIVER STREET
MAP 105 LOT 137

65 M. & ANA ARIAS
65 RIVER STREET
MAP 105 LOT 140

85 M. & ANA ARIAS
85 RIVER STREET
MAP 105 LOT 139

FIGUEIREDO APARTMENTS 1, LLC
208-210 AUBURN STREET
MAP 105 LOT 23

EMPIRE CONDOMINIUM
45 WILLIAM STREET
MAP 105 LOT 34

WADRON REALTY TRUST
62 RIVER STREET
MAP 105 LOT 22

CAMBRIDGE ZEN CENTER INC.
48 RIVER STREET
MAP 105 LOT 109

ETHRIDGE F. & JOYCE L. KING
34 RIVER STREET
MAP 105 LOT 110

JON BOTTI & LESLIE A. JENG
32 RIVER STREET
MAP 105 LOT 122

30 RIVER STREET REALTY TRUST
30 RIVER STREET
MAP 105 LOT 121

28 RIVER STREET CONDOMINIUM
28 RIVER STREET
MAP 105 LOT 120

CITY OF CAMBRIDGE
DEPARTMENT OF PUBLIC WORKS
WESTERN AVENUE
MAP 105 LOT 90

LEGEND:

- 9 — RAMP NUMBER
- 10 — DRIVEWAY NUMBER
- PERMEABLE ASPHALT
- PERMEABLE ASPHALT DRIVEWAY
- HMA SBL RAMP

PLAN

0 20 50 100

SCALE: 1" = 20'

NOTES:

1. SEE DETAILS FOR CURB INSTALLATION, PEDESTRIAN RAMP, DRIVEWAY, AND SIDEWALK CONSTRUCTION DETAILS.
2. CONTRACTOR SHALL ADJUST EXISTING CITY OWNED UTILITY COVERS AND CASTINGS TO RE-GRADED SURFACES. THE CONTRACTOR TO COORDINATE WITH RESPECTIVE UTILITIES COMPANIES FOR GAS/TELECOM/CABLE/ELECTRIC.
3. ALL VERTICAL GRANITE CURBING MEETING THE SPECIFICATIONS AND WITH APPROVAL OF THE OWNER SHALL BE REMOVED AND RESET UNLESS OTHERWISE NOTED.
4. ALL EXISTING FEATURES AT BACK OF SIDEWALK SHALL REMAIN IN PLACE UNLESS OTHERWISE NOTED. DAMAGES OR DISLODGING OF FEATURES AT BACK OF SIDEWALK SHALL BE REPAIRED/REPLACED BY THE CONTRACTOR AT NO ADDITIONAL COST TO THE PRIVATE PROPERTY OWNER OR OWNERS.
5. CONTRACTOR SHALL MATCH THE EXISTING GRADE AT THE LIMIT OF PROPOSED COLD PLANE AND OVERLAY. THE JOINT BETWEEN EXISTING AND PROPOSED PAVEMENT SHALL BE TREATED WITH INFRARED PAVEMENT SEALANT AND HOT POURED RUBBERIZED ASPHALT SEALER.
6. CONTRACTOR SHALL REMOVE ALL EXISTING SIGNS FROM UTILITY POLES. REFER TO SHEETS TR-1.01 TO TR-1.10 FOR PROPOSED SIGNS AND THEIR LOCATIONS.
7. CONTRACTOR SHALL NOT PERFORM ANY WORK ON PRIVATE PROPERTY UNTIL A SIGNED RIGHT-OF-ENTRY (ROE) IS RECEIVED BY DPW FROM THE PROPERTY OWNER. THE CONTRACTOR IS RESPONSIBLE FOR COORDINATING WITH THE PROPERTY OWNER.
8. SEE STREETSCAPE PLANS FOR SIDEWALK MATERIALS, PLANTINGS, AND STREET FURNISHINGS

ISSUED FOR BID

HDR ENGINEERING, INC.
99 HIGH STREET, SUITE 2300
BOSTON, MASSACHUSETTS 02110-2378
(617) 357-7700

COMMONWEALTH OF MASSACHUSETTS
PHILIP FUSCO
CIVIL
No. 45868
REGISTERED PROFESSIONAL ENGINEER

Scale			
Date			
Job No.			
Designed by			
Drawn by			
Checked by	No.	Description	Date
Approved by	REVISIONS		

THE CAMBRIDGE DEPARTMENT OF PUBLIC WORKS

Client: CITY OF CAMBRIDGE, MA	Sheet: R-1.06
Project: RIVER STREET INFRASTRUCTURE AND STREETSCAPE PROJECT	Total Sheets: 381
Drawing: **ROADWAY CONSTRUCTION PLAN - 6**	File No.

File: C:\PWWORKINGIEAST01\D07863961\7113XXX_(CONSTRUCTION PLANS).DWG Plotted: 4/15/2022 2:57:25 PM

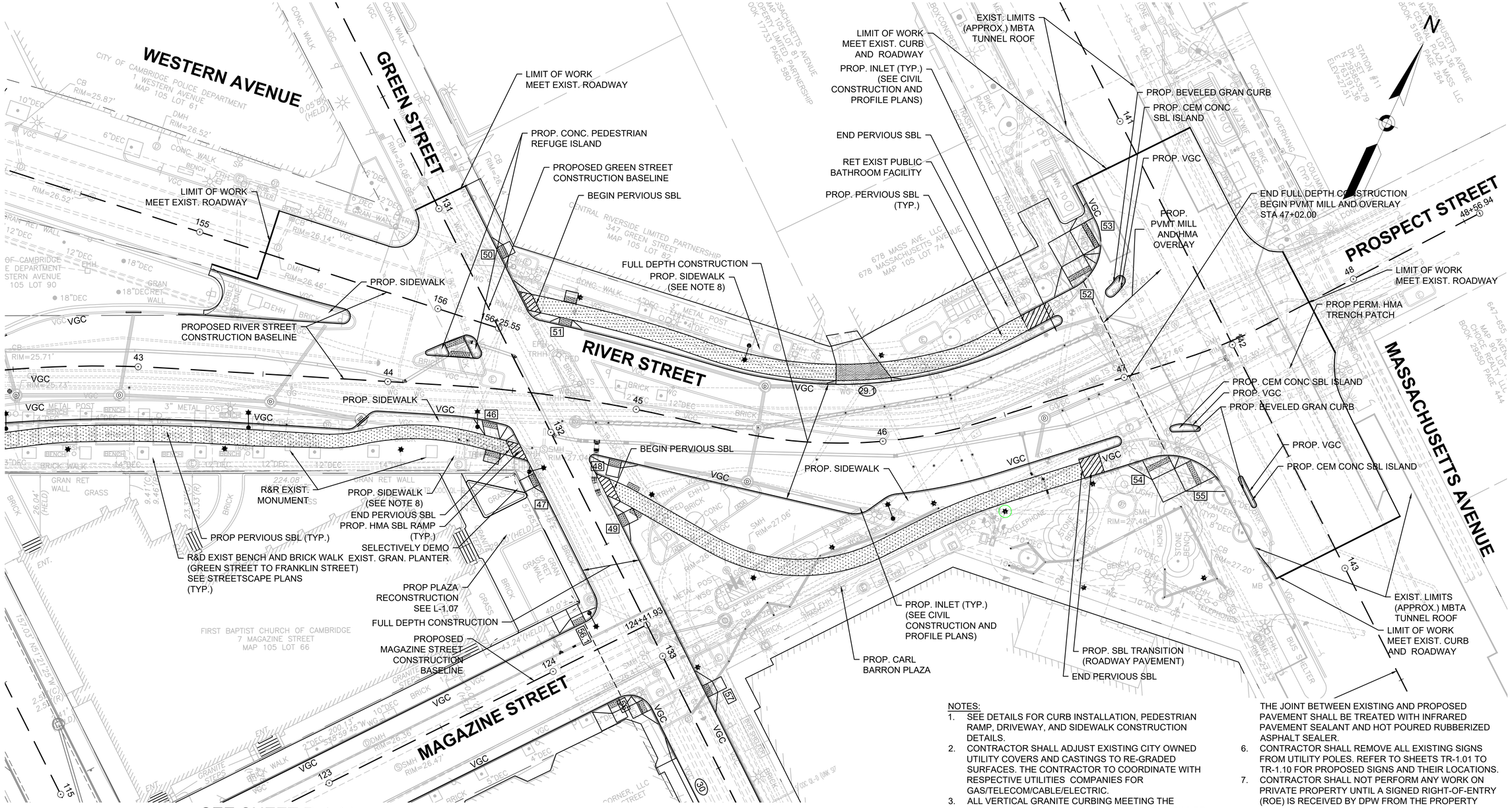

LEGEND:

- 9 — RAMP NUMBER
- 10 — DRIVEWAY NUMBER
- PERMEABLE ASPHALT
- PERMEABLE ASPHALT DRIVEWAY
- HMA SBL RAMP

NOTES:

1. SEE DETAILS FOR CURB INSTALLATION, PEDESTRIAN RAMP, DRIVEWAY, AND SIDEWALK CONSTRUCTION DETAILS.
2. CONTRACTOR SHALL ADJUST EXISTING CITY OWNED UTILITY COVERS AND CASTINGS TO RE-GRADED SURFACES. THE CONTRACTOR TO COORDINATE WITH RESPECTIVE UTILITIES COMPANIES FOR GAS/TELECOM/CABLE/ELECTRIC.
3. ALL VERTICAL GRANITE CURBING MEETING THE SPECIFICATIONS AND WITH APPROVAL OF THE OWNER SHALL BE REMOVED AND RESET UNLESS OTHERWISE NOTED.
4. ALL EXISTING FEATURES AT BACK OF SIDEWALK SHALL REMAIN IN PLACE UNLESS OTHERWISE NOTED. DAMAGES OR DISLODGING OF FEATURES AT BACK OF SIDEWALK SHALL BE REPAIRED/REPLACED BY THE CONTRACTOR AT NO ADDITIONAL COST TO THE PRIVATE PROPERTY OWNER OR OWNERS.
5. CONTRACTOR SHALL MATCH THE EXISTING GRADE AT THE LIMIT OF PROPOSED COLD PLANE AND OVERLAY. THE JOINT BETWEEN EXISTING AND PROPOSED PAVEMENT SHALL BE TREATED WITH INFRARED PAVEMENT SEALANT AND HOT POURED RUBBERIZED ASPHALT SEALER.
6. CONTRACTOR SHALL REMOVE ALL EXISTING SIGNS FROM UTILITY POLES. REFER TO SHEETS TR-1.01 TO TR-1.10 FOR PROPOSED SIGNS AND THEIR LOCATIONS.
7. CONTRACTOR SHALL NOT PERFORM ANY WORK ON PRIVATE PROPERTY UNTIL A SIGNED RIGHT-OF-ENTRY (ROE) IS RECEIVED BY DPW FROM THE PROPERTY OWNER. THE CONTRACTOR IS RESPONSIBLE FOR COORDINATING WITH THE PROPERTY OWNER.
8. SEE STREETSCAPE PLANS FOR SIDEWALK MATERIALS, PLANTINGS, AND STREET FURNISHINGS

PLAN

0 20 50 100

SCALE: 1" = 20'

ISSUED FOR BID

HDR ENGINEERING, INC.
99 HIGH STREET, SUITE 2300
BOSTON, MASSACHUSETTS 02110-2378
(617) 357-7700

COMMONWEALTH OF MASSACHUSETTS PHILIP FUSCO CIVIL No. 45868 REGISTERED PROFESSIONAL ENGINEER

Scale			
Date			
Job No.			
Designed by			
Drawn by			
Checked by	No.	Description	Date
Approved by	REVISIONS		

THE WORKS — CAMBRIDGE DEPARTMENT OF PUBLIC WORKS

Client: CITY OF CAMBRIDGE, MA	Sheet: R-1.07
Project: RIVER STREET INFRASTRUCTURE AND STREETSCAPE PROJECT	Total Sheets: 381
Drawing: **ROADWAY CONSTRUCTION PLAN - 7**	File No.

File: C:\PW\WORKING\EAST01\D0786396\7113XXX_(CONSTRUCTION PLANS).DWG Plotted: 4/15/2022 2:57:38 PM

SEE SHEET R-1.02

SEE SHEET R-1.09

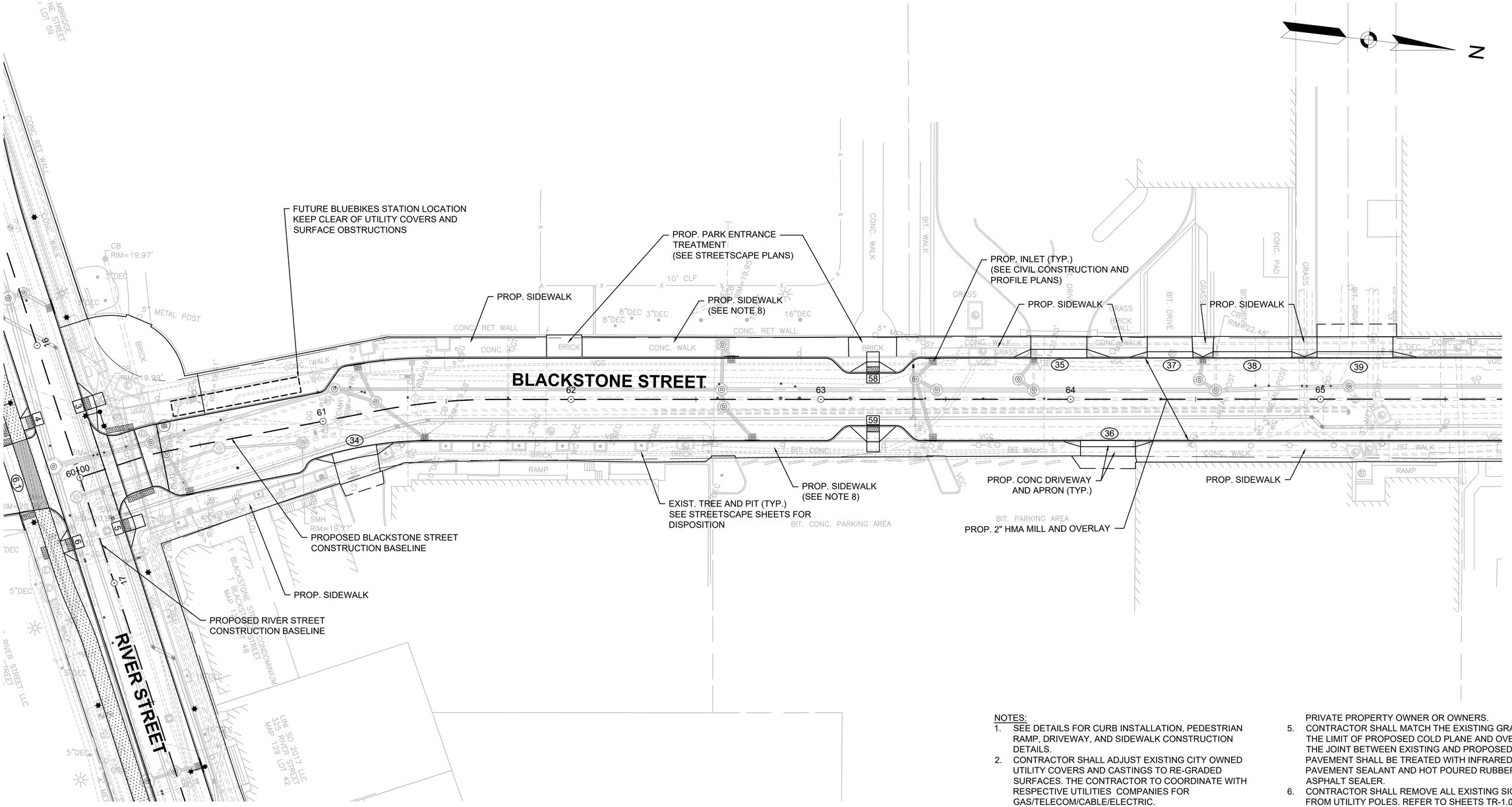

LEGEND:

- 9 — RAMP NUMBER
- 10 — DRIVEWAY NUMBER
- PERMEABLE ASPHALT
- PERMEABLE ASPHALT DRIVEWAY
- HMA SBL RAMP

PLAN

0 20 50 100

SCALE: 1" = 20'

NOTES:

1. SEE DETAILS FOR CURB INSTALLATION, PEDESTRIAN RAMP, DRIVEWAY, AND SIDEWALK CONSTRUCTION DETAILS.
2. CONTRACTOR SHALL ADJUST EXISTING CITY OWNED UTILITY COVERS AND CASTINGS TO RE-GRADED SURFACES. THE CONTRACTOR TO COORDINATE WITH RESPECTIVE UTILITIES COMPANIES FOR GAS/TELECOM/CABLE/ELECTRIC.
3. ALL VERTICAL GRANITE CURBING MEETING THE SPECIFICATIONS AND WITH APPROVAL OF THE OWNER SHALL BE REMOVED AND RESET UNLESS OTHERWISE NOTED.
4. ALL EXISTING FEATURES AT BACK OF SIDEWALK SHALL REMAIN IN PLACE UNLESS OTHERWISE NOTED. DAMAGES OR DISLODGING OF FEATURES AT BACK OF SIDEWALK SHALL BE REPAIRED/REPLACED BY THE CONTRACTOR AT NO ADDITIONAL COST TO THE PRIVATE PROPERTY OWNER OR OWNERS.
5. CONTRACTOR SHALL MATCH THE EXISTING GRADE AT THE LIMIT OF PROPOSED COLD PLANE AND OVERLAY. THE JOINT BETWEEN EXISTING AND PROPOSED PAVEMENT SHALL BE TREATED WITH INFRARED PAVEMENT SEALANT AND HOT POURED RUBBERIZED ASPHALT SEALER.
6. CONTRACTOR SHALL REMOVE ALL EXISTING SIGNS FROM UTILITY POLES. REFER TO SHEETS TR-1.01 TO TR-1.10 FOR PROPOSED SIGNS AND THEIR LOCATIONS.
7. CONTRACTOR SHALL NOT PERFORM ANY WORK ON PRIVATE PROPERTY UNTIL A SIGNED RIGHT-OF-ENTRY (ROE) IS RECEIVED BY DPW FROM THE PROPERTY OWNER. THE CONTRACTOR IS RESPONSIBLE FOR COORDINATING WITH THE PROPERTY OWNER.
8. SEE STREETSCAPE PLANS FOR SIDEWALK MATERIALS, PLANTINGS, AND STREET FURNISHINGS

ISSUED FOR BID

HDR
HDR ENGINEERING, INC.
99 HIGH STREET, SUITE 2300
BOSTON, MASSACHUSETTS 02110-2378
(617) 357-7700

COMMONWEALTH OF MASSACHUSETTS
PHILIP FUSCO
CIVIL
No. 45868
REGISTERED PROFESSIONAL ENGINEER

Scale			
Date			
Job No.			
Designed by			
Drawn by			
Checked by	No.	Description	Date
Approved by	REVISIONS		

CAMBRIDGE DEPARTMENT OF PUBLIC WORKS

Client: CITY OF CAMBRIDGE, MA	Sheet: R-1.08
Project: RIVER STREET INFRASTRUCTURE AND STREETSCAPE PROJECT	Total Sheets: 381
Drawing: **ROADWAY CONSTRUCTION PLAN - 8**	File No.

File: C:\PWWORKING\EAST01\D07863961\7113XXX_(CONSTRUCTION PLANS).DWG Plotted: 4/15/2022 2:57:47 PM

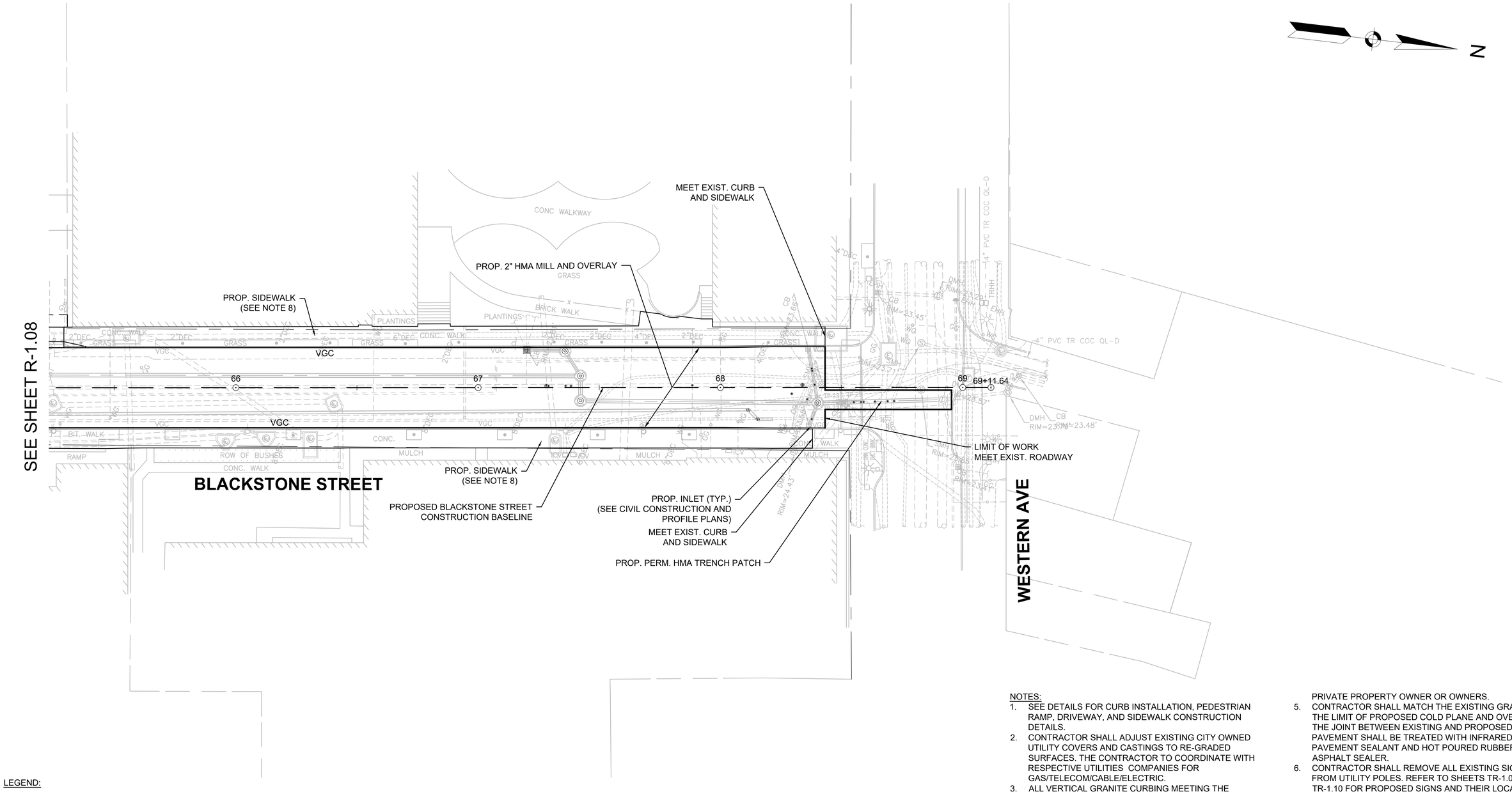

LEGEND:

- 9 — RAMP NUMBER
- 10 — DRIVEWAY NUMBER
- PERMEABLE ASPHALT
- PERMEABLE ASPHALT DRIVEWAY
- HMA SBL RAMP

PLAN

0 20 50 100

SCALE: 1" = 20'

NOTES:

1. SEE DETAILS FOR CURB INSTALLATION, PEDESTRIAN RAMP, DRIVEWAY, AND SIDEWALK CONSTRUCTION DETAILS.
2. CONTRACTOR SHALL ADJUST EXISTING CITY OWNED UTILITY COVERS AND CASTINGS TO RE-GRADED SURFACES. THE CONTRACTOR TO COORDINATE WITH RESPECTIVE UTILITIES COMPANIES FOR GAS/TELECOM/CABLE/ELECTRIC.
3. ALL VERTICAL GRANITE CURBING MEETING THE SPECIFICATIONS AND WITH APPROVAL OF THE OWNER SHALL BE REMOVED AND RESET UNLESS OTHERWISE NOTED.
4. ALL EXISTING FEATURES AT BACK OF SIDEWALK SHALL REMAIN IN PLACE UNLESS OTHERWISE NOTED. DAMAGES OR DISLODGING OF FEATURES AT BACK OF SIDEWALK SHALL BE REPAIRED/REPLACED BY THE CONTRACTOR AT NO ADDITIONAL COST TO THE PRIVATE PROPERTY OWNER OR OWNERS.
5. CONTRACTOR SHALL MATCH THE EXISTING GRADE AT THE LIMIT OF PROPOSED COLD PLANE AND OVERLAY. THE JOINT BETWEEN EXISTING AND PROPOSED PAVEMENT SHALL BE TREATED WITH INFRARED PAVEMENT SEALANT AND HOT POURED RUBBERIZED ASPHALT SEALER.
6. CONTRACTOR SHALL REMOVE ALL EXISTING SIGNS FROM UTILITY POLES. REFER TO SHEETS TR-1.01 TO TR-1.10 FOR PROPOSED SIGNS AND THEIR LOCATIONS.
7. CONTRACTOR SHALL NOT PERFORM ANY WORK ON PRIVATE PROPERTY UNTIL A SIGNED RIGHT-OF-ENTRY (ROE) IS RECEIVED BY DPW FROM THE PROPERTY OWNER. THE CONTRACTOR IS RESPONSIBLE FOR COORDINATING WITH THE PROPERTY OWNER.
8. SEE STREETSCAPE PLANS FOR SIDEWALK MATERIALS, PLANTINGS, AND STREET FURNISHINGS

ISSUED FOR BID

HDR ENGINEERING, INC.
99 HIGH STREET, SUITE 2300
BOSTON, MASSACHUSETTS 02110-2378
(617) 357-7700

COMMONWEALTH OF MASSACHUSETTS
PHILIP FUSCO
CIVIL
No. 45868
REGISTERED PROFESSIONAL ENGINEER

Scale			
Date			
Job No.			
Designed by			
Drawn by			
Checked by	No.	Description	Date
Approved by	REVISIONS		

THE WORKS — CAMBRIDGE DEPARTMENT OF PUBLIC WORKS

Client: CITY OF CAMBRIDGE, MA	Sheet: R-1.09
Project: RIVER STREET INFRASTRUCTURE AND STREETSCAPE PROJECT	Total Sheets: 381
Drawing: **ROADWAY CONSTRUCTION PLAN - 9**	File No.

File: C:\PW\WORKING\EAST01\D0786396\7113XXX_(CONSTRUCTION PLANS).DWG Plotted: 4/15/2022 2:57:57 PM

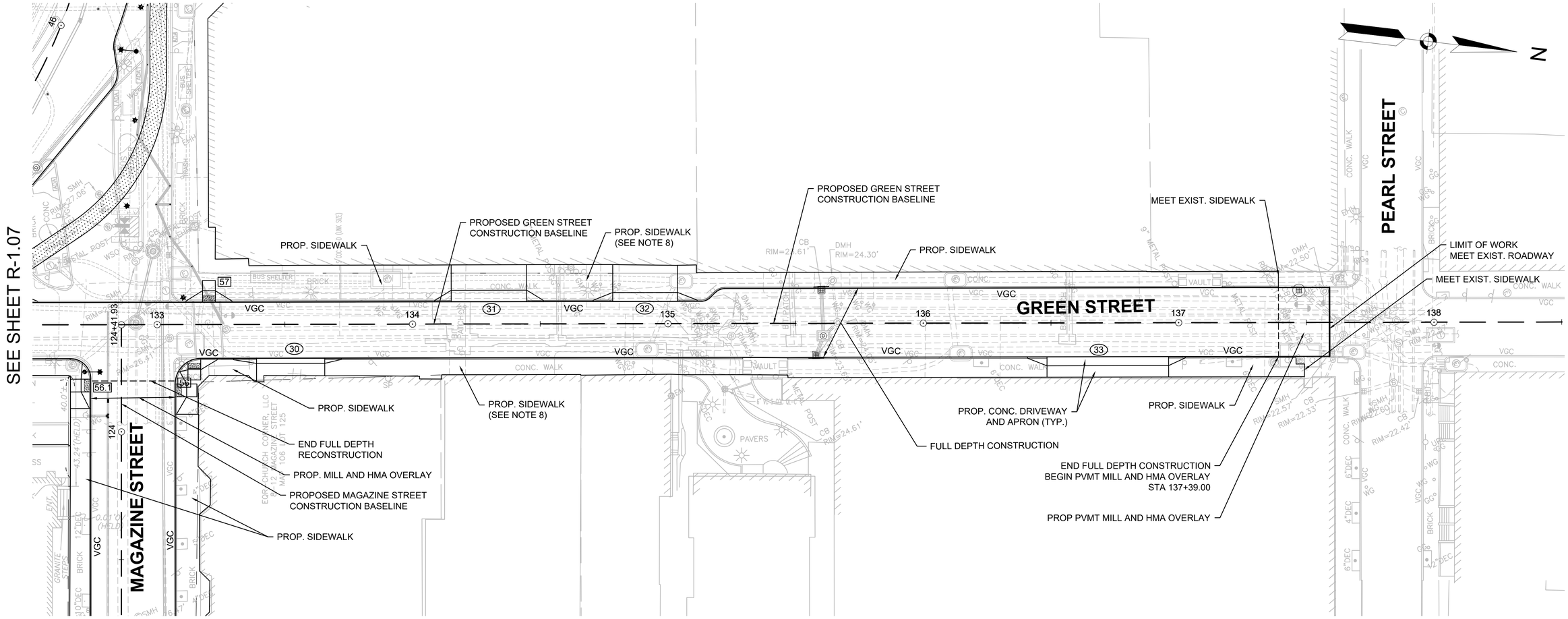

LEGEND:

- 9 — RAMP NUMBER
- 10 — DRIVEWAY NUMBER
- PERMEABLE ASPHALT
- PERMEABLE ASPHALT DRIVEWAY
- HMA SBL RAMP

PLAN

0 20 50 100

SCALE: 1" = 20'

NOTES:

1. SEE DETAILS FOR CURB INSTALLATION, PEDESTRIAN RAMP, DRIVEWAY, AND SIDEWALK CONSTRUCTION DETAILS.
2. CONTRACTOR SHALL ADJUST EXISTING CITY OWNED UTILITY COVERS AND CASTINGS TO RE-GRADED SURFACES. THE CONTRACTOR TO COORDINATE WITH RESPECTIVE UTILITIES COMPANIES FOR GAS/TELECOM/CABLE/ELECTRIC.
3. ALL VERTICAL GRANITE CURBING MEETING THE SPECIFICATIONS AND WITH APPROVAL OF THE OWNER SHALL BE REMOVED AND RESET UNLESS OTHERWISE NOTED.
4. ALL EXISTING FEATURES AT BACK OF SIDEWALK SHALL REMAIN IN PLACE UNLESS OTHERWISE NOTED. DAMAGES OR DISLODGING OF FEATURES AT BACK OF SIDEWALK SHALL BE REPAIRED/REPLACED BY THE CONTRACTOR AT NO ADDITIONAL COST TO THE PRIVATE PROPERTY OWNER OR OWNERS.
5. CONTRACTOR SHALL MATCH THE EXISTING GRADE AT THE LIMIT OF PROPOSED COLD PLANE AND OVERLAY. THE JOINT BETWEEN EXISTING AND PROPOSED PAVEMENT SHALL BE TREATED WITH INFRARED PAVEMENT SEALANT AND HOT POURED RUBBERIZED ASPHALT SEALER.
6. CONTRACTOR SHALL REMOVE ALL EXISTING SIGNS FROM UTILITY POLES. REFER TO SHEETS TR-1.01 TO TR-1.10 FOR PROPOSED SIGNS AND THEIR LOCATIONS.
7. CONTRACTOR SHALL NOT PERFORM ANY WORK ON PRIVATE PROPERTY UNTIL A SIGNED RIGHT-OF-ENTRY (ROE) IS RECEIVED BY DPW FROM THE PROPERTY OWNER. THE CONTRACTOR IS RESPONSIBLE FOR COORDINATING WITH THE PROPERTY OWNER.
8. SEE STREETSCAPE PLANS FOR SIDEWALK MATERIALS, PLANTINGS, AND STREET FURNISHINGS

ISSUED FOR BID

HDR ENGINEERING, INC.
99 HIGH STREET, SUITE 2300
BOSTON, MASSACHUSETTS 02110-2378
(617) 357-7700

COMMONWEALTH OF MASSACHUSETTS
PHILIP FUSCO
CIVIL
No. 45868
REGISTERED PROFESSIONAL ENGINEER

Scale			
Date			
Job No.			
Designed by			
Drawn by			
Checked by	No.	Description	Date
Approved by	REVISIONS		

THE WORKS — CAMBRIDGE DEPARTMENT OF PUBLIC WORKS

Client	CITY OF CAMBRIDGE, MA	Sheet	R-1.10
Project	RIVER STREET INFRASTRUCTURE AND STREETSCAPE PROJECT	Total Sheets	381
Drawing	**ROADWAY CONSTRUCTION PLAN - 10**	File No.	

File: C:\PW\WORKING\EAST01\D0786396\7113XXX_(CONSTRUCTION PLANS).DWG Plotted: 4/15/2022 2:58:06 PM

SEE SHEET R-1.10

SEE SHEET R-1.10

SEE SHEET R-1.07

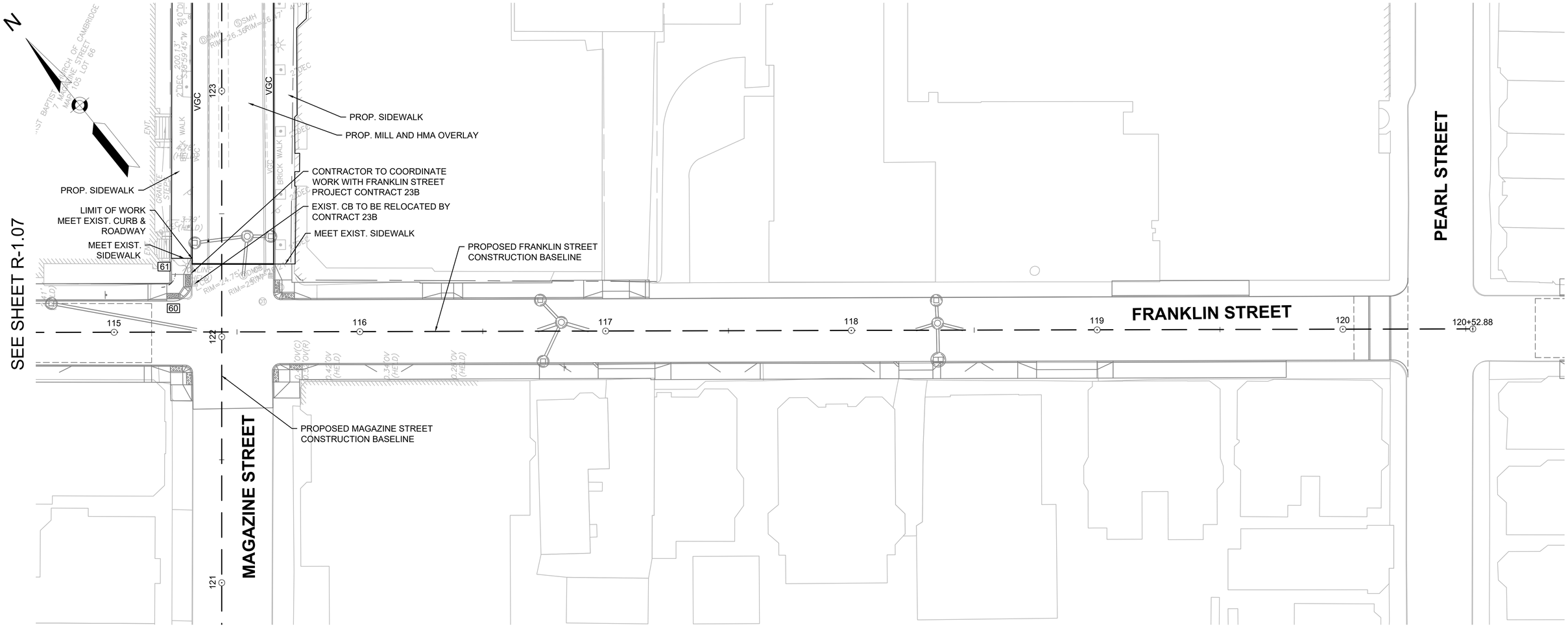

LEGEND:

- 9 — RAMP NUMBER
- 10 — DRIVEWAY NUMBER
- PERMEABLE ASPHALT
- PERMEABLE ASPHALT DRIVEWAY
- HMA SBL RAMP

PLAN

0 20 50 100

SCALE: 1" = 20'

NOTES:

1. SEE DETAILS FOR CURB INSTALLATION, PEDESTRIAN RAMP, DRIVEWAY, AND SIDEWALK CONSTRUCTION DETAILS.
2. CONTRACTOR SHALL ADJUST EXISTING CITY OWNED UTILITY COVERS AND CASTINGS TO RE-GRADED SURFACES. THE CONTRACTOR TO COORDINATE WITH RESPECTIVE UTILITIES COMPANIES FOR GAS/TELECOM/CABLE/ELECTRIC.
3. ALL VERTICAL GRANITE CURBING MEETING THE SPECIFICATIONS AND WITH APPROVAL OF THE OWNER SHALL BE REMOVED AND RESET UNLESS OTHERWISE NOTED.
4. ALL EXISTING FEATURES AT BACK OF SIDEWALK SHALL REMAIN IN PLACE UNLESS OTHERWISE NOTED. DAMAGES OR DISLODGING OF FEATURES AT BACK OF SIDEWALK SHALL BE REPAIRED/REPLACED BY THE CONTRACTOR AT NO ADDITIONAL COST TO THE PRIVATE PROPERTY OWNER OR OWNERS.
5. CONTRACTOR SHALL MATCH THE EXISTING GRADE AT THE LIMIT OF PROPOSED COLD PLANE AND OVERLAY. THE JOINT BETWEEN EXISTING AND PROPOSED PAVEMENT SHALL BE TREATED WITH INFRARED PAVEMENT SEALANT AND HOT POURED RUBBERIZED ASPHALT SEALER.
6. CONTRACTOR SHALL REMOVE ALL EXISTING SIGNS FROM UTILITY POLES. REFER TO SHEETS TR-1.01 TO TR-1.10 FOR PROPOSED SIGNS AND THEIR LOCATIONS.
7. CONTRACTOR SHALL NOT PERFORM ANY WORK ON PRIVATE PROPERTY UNTIL A SIGNED RIGHT-OF-ENTRY (ROE) IS RECEIVED BY DPW FROM THE PROPERTY OWNER. THE CONTRACTOR IS RESPONSIBLE FOR COORDINATING WITH THE PROPERTY OWNER.
8. SEE STREETSCAPE PLANS FOR SIDEWALK MATERIALS, PLANTINGS, AND STREET FURNISHINGS

ISSUED FOR BID

HDR ENGINEERING, INC.
99 HIGH STREET, SUITE 2300
BOSTON, MASSACHUSETTS 02110–2378
(617) 357–7700

PHILIP FUSCO CIVIL No. 45868 — COMMONWEALTH OF MASSACHUSETTS — REGISTERED PROFESSIONAL ENGINEER

Scale			
Date			
Job No.			
Designed by			
Drawn by			
Checked by	No.	Description	Date
Approved by	REVISIONS		

THE WORKS — CAMBRIDGE DEPARTMENT OF PUBLIC

Client	CITY OF CAMBRIDGE, MA	Sheet R-1.11
Project	RIVER STREET INFRASTRUCTURE AND STREETSCAPE PROJECT	Total Sheets 381
Drawing	**ROADWAY CONSTRUCTION PLAN - 11**	File No.

File: C:\PWWORKING\EAST01\D0786396\7113XXX_(CONSTRUCTION PLANS).DWG Plotted: 4/15/2022 2:58:14 PM

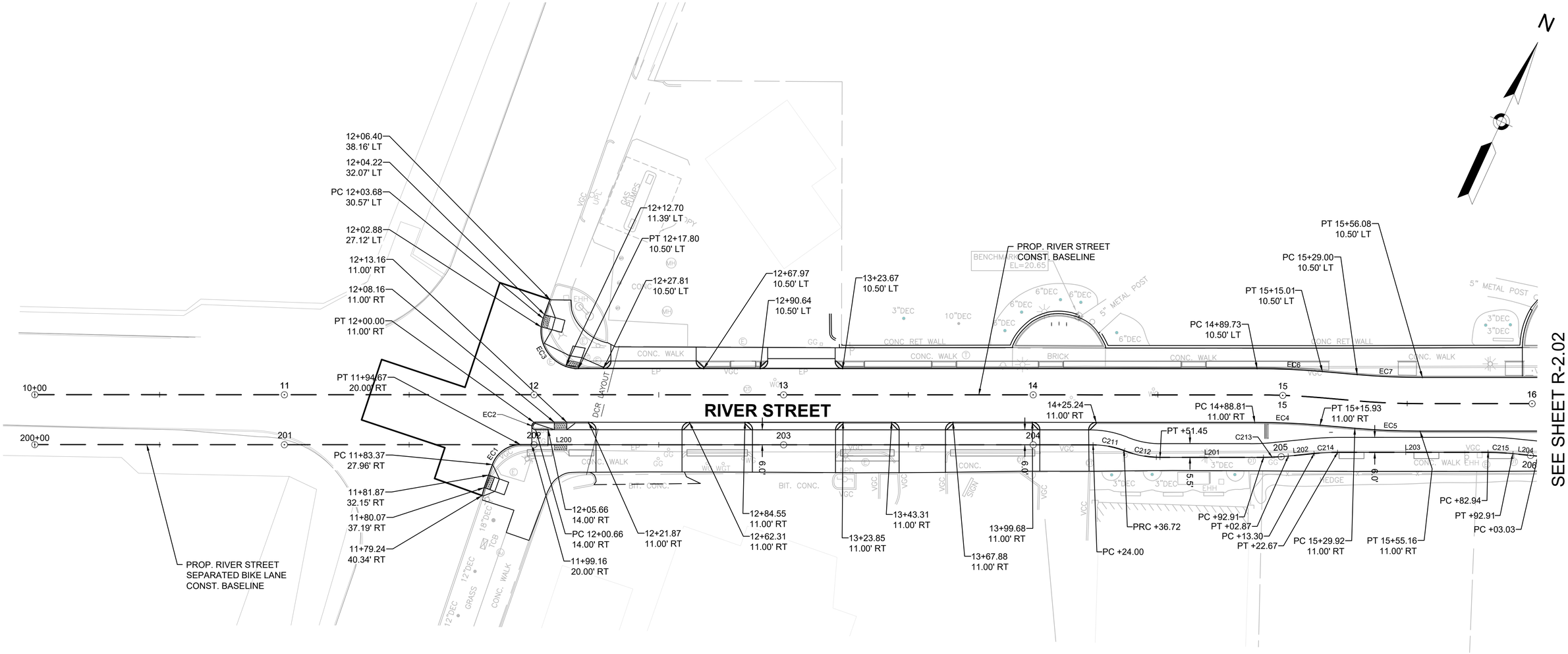

NOTES:

1. SEE SHEET R-2.19 FOR CURB CURVE TABLES
2. SEE SHEETS R-2.20 & R-2.21 FOR SEPARATED BIKE LANE CONSTRUCTION BASELINE DATA

LEGEND:

EC1	CURB CURVE NUMBER
L200	RIVER ST SEPARATED BIKE LANE ALIGNMENT LINE NUMBER
C200	RIVER ST SEPARATED BIKE LANE ALIGNMENT CURVE NUMBER

PLAN

0 20 50 100

SCALE: 1" = 20'

ISSUED FOR BID

HDR ENGINEERING, INC.
99 HIGH STREET, SUITE 2300
BOSTON, MASSACHUSETTS 02110-2378
(617) 357-7700

COMMONWEALTH OF MASSACHUSETTS
PHILIP FUSCO
CIVIL
No. 45868
REGISTERED PROFESSIONAL ENGINEER

Scale			
Date			
Job No.			
Designed by			
Drawn by			
Checked by	No.	Description	Date
Approved by	REVISIONS		

THE WORKS
CAMBRIDGE DEPARTMENT OF PUBLIC

Client: CITY OF CAMBRIDGE, MA

Project: RIVER STREET
INFRASTRUCTURE AND STREETSCAPE PROJECT

Drawing: **ROADWAY CURB TIE AND ALIGNMENT PLAN - 1**

Sheet: R-2.01

Total Sheets: 381

File No.

File: C:\PWWORKING\EAST01\D07863961\7113XXX_(CURB TIE PLANS).DWG Plotted: 4/15/2022 3:00:23 PM

SEE SHEET R-2.08

SEE SHEET R-2.01

SEE SHEET R-2.03

BLACKSTONE STREET

RIVER STREET

PROP. BLACKSTONE STREET CONST. BASELINE

PROP. RIVER STREET CONST. BASELINE

PROP. RIVER STREET SEPARATED BIKE LANE CONST. BASELINE

SEE SHEET R-2.12 FOR CURB TIE DETAILS

SEE SHEET R-2.12 FOR CURB TIE DETAILS

BENCHMARK: TBM-23 EL=21.87

BENCHMARK: JNC-1 EL=22.19

PC 19+62.61 11.50' LT

PT 19+66.14 12.96' LT

PC 19+69.21 16.04' LT

PT 19+72.75 17.50' LT

PT 21+49.03 11.50' LT

PC 21+45.49 12.96' LT

PT 21+42.42 16.04' LT

PC 21+38.89 17.50' LT

PT +13.00

PI +40.72

PC +82.94

PT +92.91

PC +03.03

PC +91.45

PT +02.02

PC +12.14

PI +11.43

PC +16.10

PT +28.15

PC +40.17

PT +44.30

PI +48.50

PT +21.51

PI +00.07

PT +48.99

PC +39.02

PT +28.90

PC +18.93

PI +33.13

PI +50.88

PI +17.88

19+94.79 10.50' RT

19+98.04 10.50' RT

20+18.39 10.50' RT

20+15.15 10.50' RT

NOTES:

1. SEE SHEET R-2.19 FOR CURB CURVE TABLES
2. SEE SHEETS R-2.20 & R-2.21 FOR SEPARATED BIKE LANE CONSTRUCTION BASELINE DATA

LEGEND:

EC1	CURB CURVE NUMBER
L200	RIVER ST SEPARATED BIKE LANE ALIGNMENT LINE NUMBER
C200	RIVER ST SEPARATED BIKE LANE ALIGNMENT CURVE NUMBER

PLAN

0 20 50 100

SCALE: 1" = 20'

ISSUED FOR BID

HDR ENGINEERING, INC.
99 HIGH STREET, SUITE 2300
BOSTON, MASSACHUSETTS 02110-2378
(617) 357-7700

PHILIP FUSCO CIVIL No. 45868 REGISTERED PROFESSIONAL ENGINEER COMMONWEALTH OF MASSACHUSETTS

Scale			
Date			
Job No.			
Designed by			
Drawn by			
Checked by	No.	Description	Date
Approved by	REVISIONS		

THE WORKS — CAMBRIDGE DEPARTMENT OF PUBLIC WORKS

Client: CITY OF CAMBRIDGE, MA

Project: RIVER STREET INFRASTRUCTURE AND STREETSCAPE PROJECT

Drawing: **ROADWAY CURB TIE AND ALIGNMENT PLAN - 2**

Sheet: R-2.02

Total Sheets: 381

File No.

File: C:\PWWORKING\EAST01\D07863961713XXX_(CURB TIE PLANS).DWG Plotted: 4/15/2022 3:00:35 PM

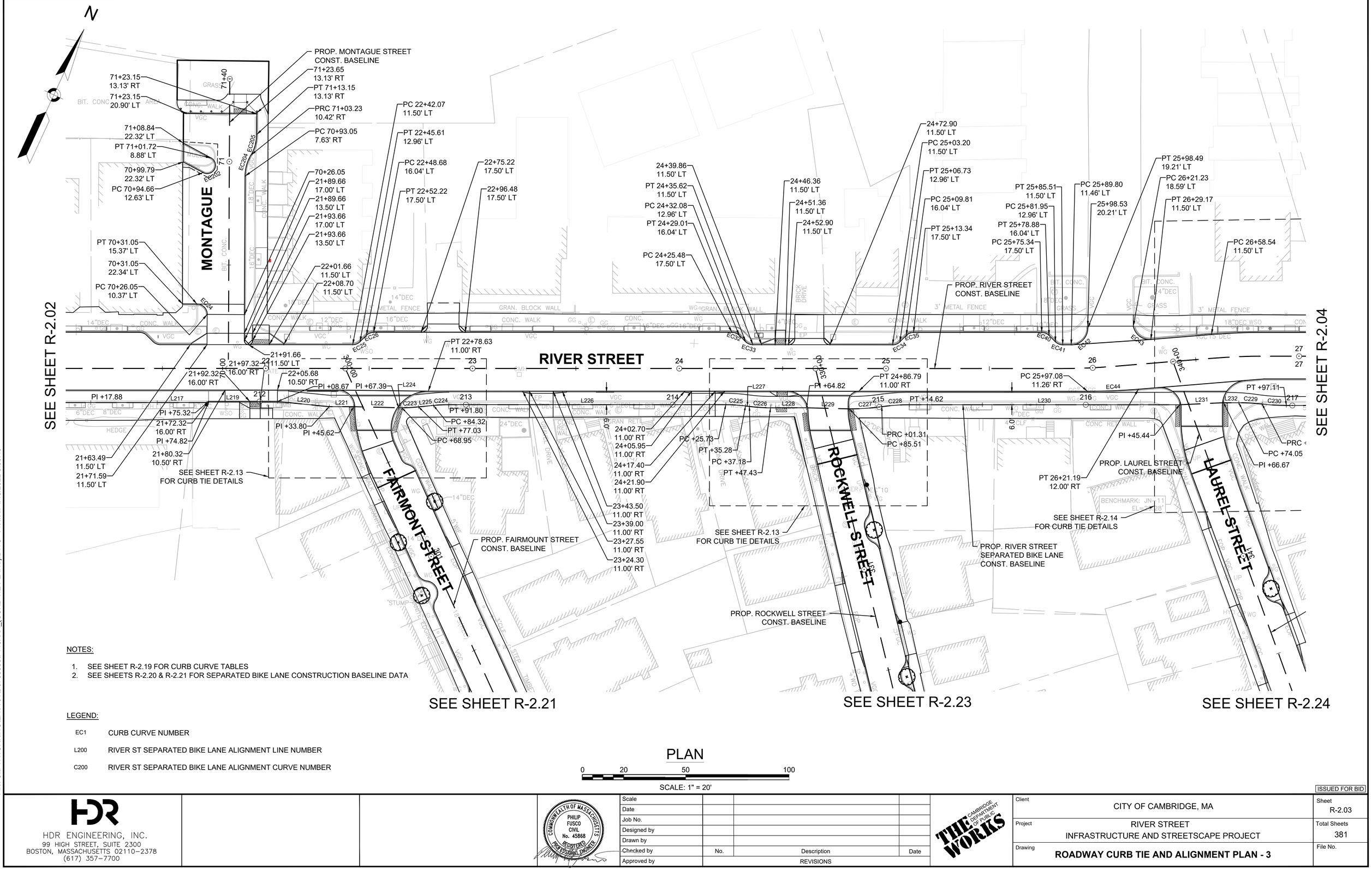

NOTES:

1. SEE SHEET R-2.19 FOR CURB CURVE TABLES
2. SEE SHEETS R-2.20 & R-2.21 FOR SEPARATED BIKE LANE CONSTRUCTION BASELINE DATA

LEGEND:

EC1	CURB CURVE NUMBER
L200	RIVER ST SEPARATED BIKE LANE ALIGNMENT LINE NUMBER
C200	RIVER ST SEPARATED BIKE LANE ALIGNMENT CURVE NUMBER

PLAN

0 20 50 100

SCALE: 1" = 20'

ISSUED FOR BID

HDR ENGINEERING, INC.
99 HIGH STREET, SUITE 2300
BOSTON, MASSACHUSETTS 02110-2378
(617) 357-7700

COMMONWEALTH OF MASSACHUSETTS
PHILIP FUSCO
CIVIL
No. 45868
REGISTERED PROFESSIONAL ENGINEER

Scale			
Date			
Job No.			
Designed by			
Drawn by			
Checked by	No.	Description	Date
Approved by	REVISIONS		

THE WORKS — CAMBRIDGE DEPARTMENT OF PUBLIC WORKS

Client: CITY OF CAMBRIDGE, MA	Sheet: R-2.03
Project: RIVER STREET INFRASTRUCTURE AND STREETSCAPE PROJECT	Total Sheets: 381
Drawing: **ROADWAY CURB TIE AND ALIGNMENT PLAN - 3**	File No.

File: C:\PWWORKING\EAST01\D0786396\I7113XXX_(CURB TIE PLANS).DWG Plotted: 4/15/2022 3:00:45 PM

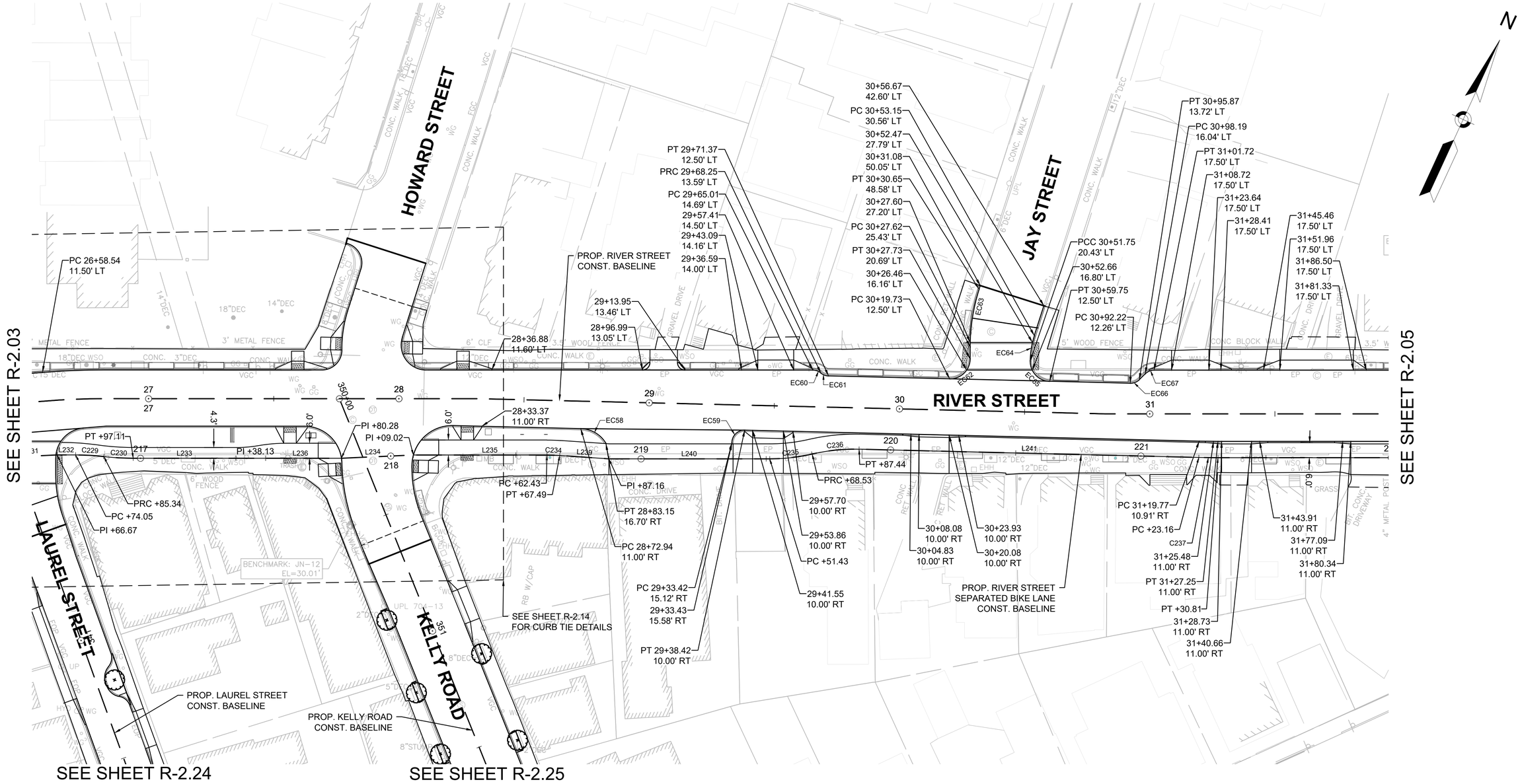

NOTES:

1. SEE SHEET R-2.19 FOR CURB CURVE TABLES
2. SEE SHEETS R-2.20 & R-2.21 FOR SEPARATED BIKE LANE CONSTRUCTION BASELINE DATA

LEGEND:

EC1	CURB CURVE NUMBER
L200	RIVER ST SEPARATED BIKE LANE ALIGNMENT LINE NUMBER
C200	RIVER ST SEPARATED BIKE LANE ALIGNMENT CURVE NUMBER

PLAN

0 20 50 100

SCALE: 1" = 20'

ISSUED FOR BID

HDR ENGINEERING, INC.
99 HIGH STREET, SUITE 2300
BOSTON, MASSACHUSETTS 02110-2378
(617) 357-7700

COMMONWEALTH OF MASSACHUSETTS
PHILIP FUSCO
CIVIL
No. 45868
REGISTERED PROFESSIONAL ENGINEER

Scale			
Date			
Job No.			
Designed by			
Drawn by			
Checked by	No.	Description	Date
Approved by	REVISIONS		

THE WORKS — CAMBRIDGE DEPARTMENT OF PUBLIC WORKS

Client: CITY OF CAMBRIDGE, MA

Project: RIVER STREET
INFRASTRUCTURE AND STREETSCAPE PROJECT

Drawing: **ROADWAY CURB TIE AND ALIGNMENT PLAN - 4**

Sheet: R-2.04

Total Sheets: 381

File No.

File: C:\PWWORKING\EAST01\D07863961\7113XXX_(CURB TIE PLANS).DWG Plotted: 4/15/2022 3:00:54 PM

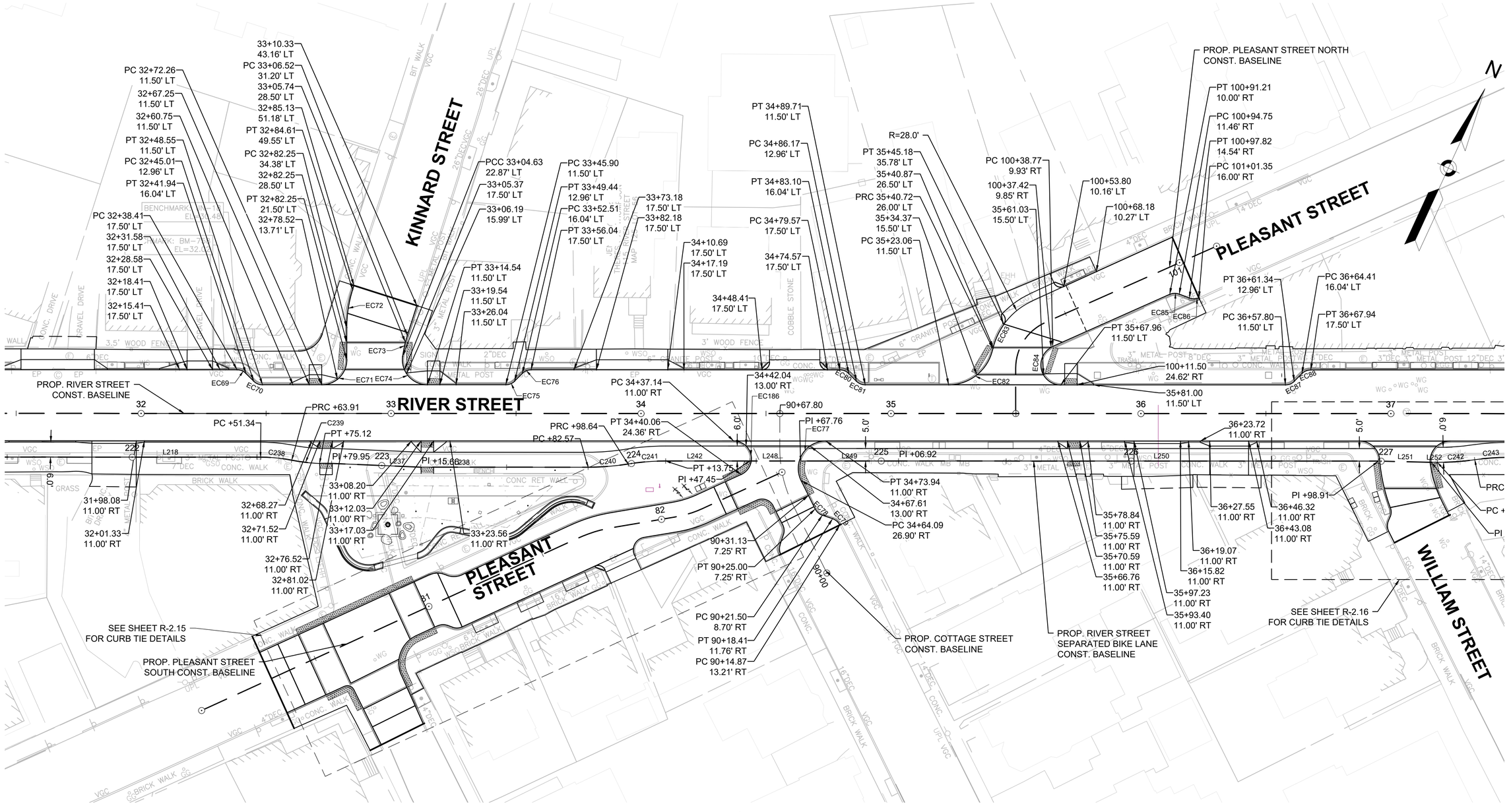

PLAN

0 20 50 100

SCALE: 1" = 20'

LEGEND:

EC1	CURB CURVE NUMBER
L200	RIVER ST SEPARATED BIKE LANE ALIGNMENT LINE NUMBER
C200	RIVER ST SEPARATED BIKE LANE ALIGNMENT CURVE NUMBER

NOTES:

1. SEE SHEET R-2.19 FOR CURB CURVE TABLES
2. SEE SHEETS R-2.20 & R-2.21 FOR SEPARATED BIKE LANE CONSTRUCTION BASELINE DATA

ISSUED FOR BID

HDR ENGINEERING, INC.
99 HIGH STREET, SUITE 2300
BOSTON, MASSACHUSETTS 02110-2378
(617) 357-7700

PHILIP FUSCO CIVIL No. 45868 COMMONWEALTH OF MASSACHUSETTS REGISTERED PROFESSIONAL ENGINEER

Scale			
Date			
Job No.			
Designed by			
Drawn by			
Checked by	No.	Description	Date
Approved by	REVISIONS		

THE WORKS — CAMBRIDGE DEPARTMENT OF PUBLIC WORKS

Client: CITY OF CAMBRIDGE, MA

Project: RIVER STREET INFRASTRUCTURE AND STREETSCAPE PROJECT

Drawing: **ROADWAY CURB TIE AND ALIGNMENT PLAN - 5**

Sheet: R-2.05

Total Sheets: 381

File No.

File: C:\PW\WORKING\EAST01\D0786396\7113XXX_(CURB TIE PLANS).DWG Plotted: 4/15/2022 3:01:05 PM

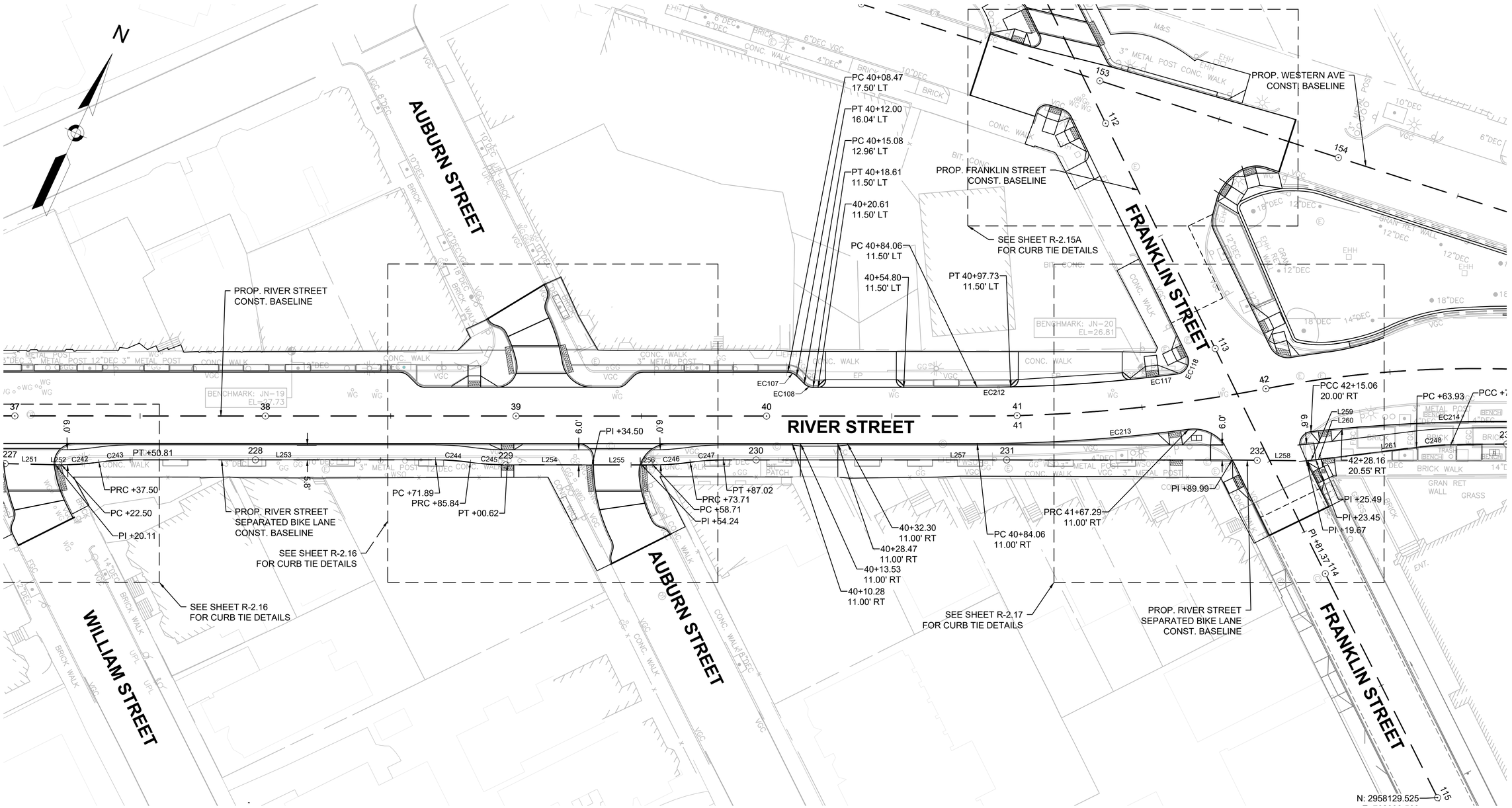

LEGEND:

EC1	CURB CURVE NUMBER
L200	RIVER ST SEPARATED BIKE LANE ALIGNMENT LINE NUMBER
C200	RIVER ST SEPARATED BIKE LANE ALIGNMENT CURVE NUMBER

NOTES:

1. SEE SHEET R-2.19 FOR CURB CURVE TABLES
2. SEE SHEETS R-2.20 & R-2.21 FOR SEPARATED BIKE LANE CONSTRUCTION BASELINE DATA

PLAN

0 20 50 100

SCALE: 1" = 20'

ISSUED FOR BID

HDR ENGINEERING, INC.
99 HIGH STREET, SUITE 2300
BOSTON, MASSACHUSETTS 02110–2378
(617) 357–7700

PHILIP FUSCO CIVIL No. 45868 REGISTERED PROFESSIONAL ENGINEER
COMMONWEALTH OF MASSACHUSETTS

Scale			
Date			
Job No.			
Designed by			
Drawn by			
Checked by	No.	Description	Date
Approved by	REVISIONS		

THE WORKS — CAMBRIDGE DEPARTMENT OF PUBLIC

Client: CITY OF CAMBRIDGE, MA	Sheet: R-2.06
Project: RIVER STREET INFRASTRUCTURE AND STREETSCAPE PROJECT	Total Sheets: 381
Drawing: **ROADWAY CURB TIE AND ALIGNMENT PLAN - 6**	File No.

File: C:\PWWORKING\EAST01\D0786396\I7113XXX_(CURB TIE PLANS).DWG Plotted: 4/15/2022 3:01:14 PM

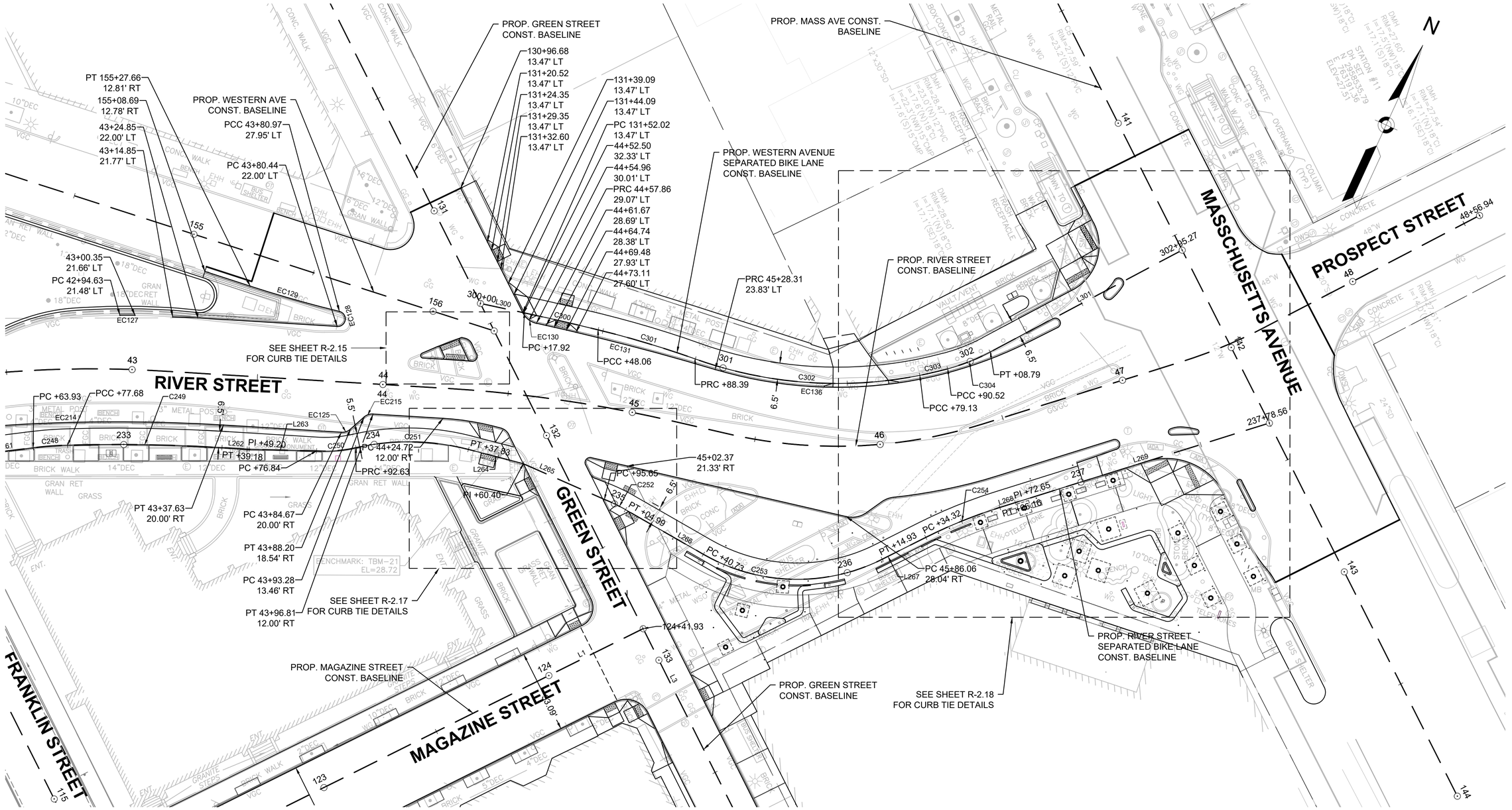

LEGEND:

EC1	CURB CURVE NUMBER
L200	RIVER ST SEPARATED BIKE LANE ALIGNMENT LINE NUMBER
C200	RIVER ST SEPARATED BIKE LANE ALIGNMENT CURVE NUMBER
L300	WESTERN AVE SEPARATED BIKE LANE ALIGNMENT LINE NUMBER
C300	WESTERN AVE SEPARATED BIKE LANE ALIGNMENT CURVE NUMBER

NOTES:

1. SEE SHEET R-2.19 FOR CURB CURVE TABLES
2. SEE SHEET R-2.20 & R-2.21 FOR SEPARATED BIKE LANE CONSTRUCTION BASELINE DATA

PLAN

0 20 50 100

SCALE: 1" = 20'

ISSUED FOR BID

HDR ENGINEERING, INC.
99 HIGH STREET, SUITE 2300
BOSTON, MASSACHUSETTS 02110-2378
(617) 357-7700

COMMONWEALTH OF MASSACHUSETTS
PHILIP FUSCO
CIVIL
No. 45868
REGISTERED PROFESSIONAL ENGINEER

Scale			
Date			
Job No.			
Designed by			
Drawn by			
Checked by	No.	Description	Date
Approved by	REVISIONS		

CAMBRIDGE DEPARTMENT OF PUBLIC WORKS

Client	CITY OF CAMBRIDGE, MA	Sheet	R-2.07
Project	RIVER STREET INFRASTRUCTURE AND STREETSCAPE PROJECT	Total Sheets	381
Drawing	**ROADWAY CURB TIE AND ALIGNMENT PLAN - 7**	File No.	

File: C:\PW\WORKING\EAST01\D0786396\I7113XXX_(CURB TIE PLANS).DWG Plotted: 4/15/2022 3:01:25 PM

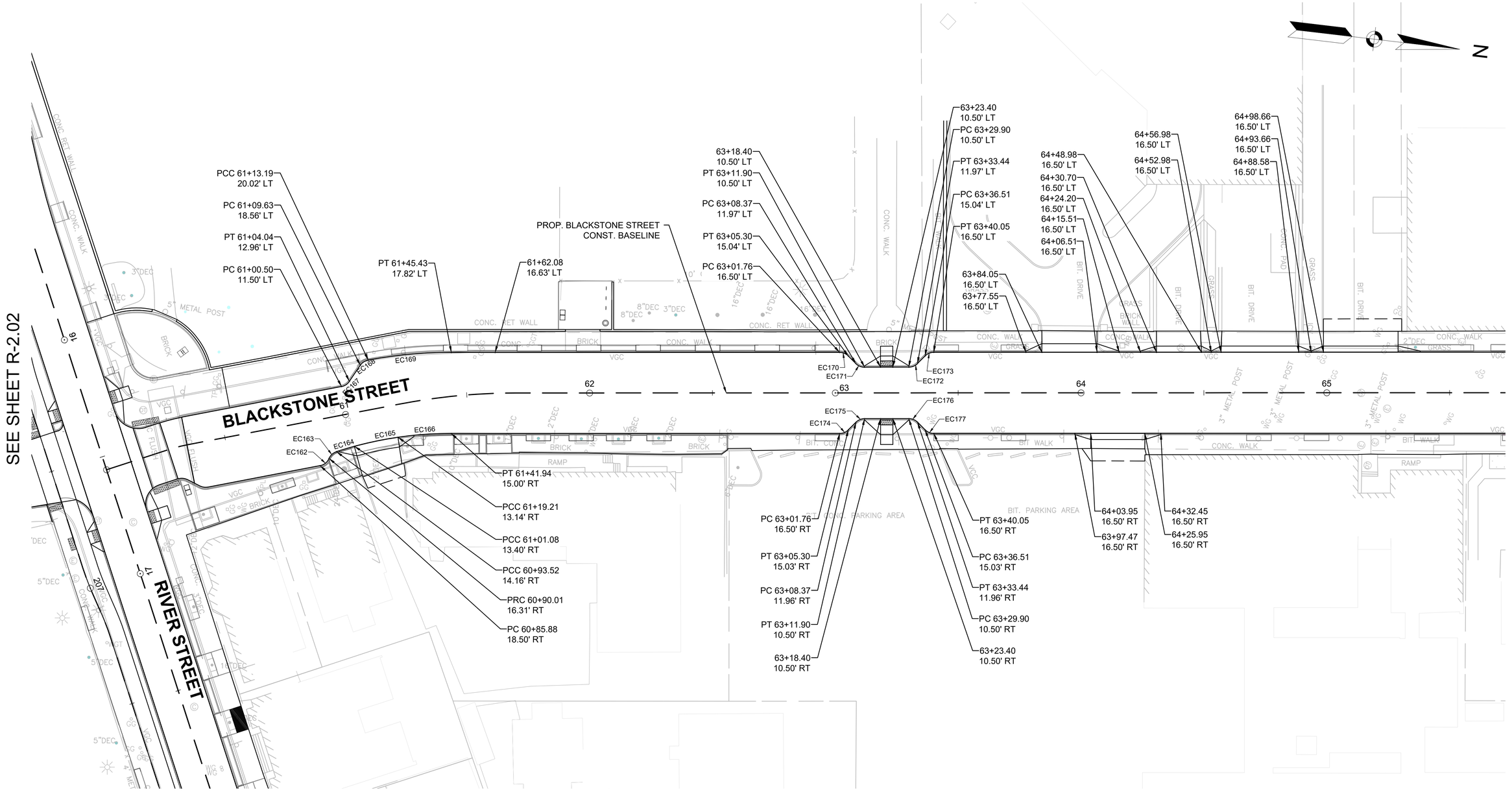

LEGEND:

EC1 CURB CURVE NUMBER

NOTES:

1. SEE SHEET R-2.19 FOR CURB CURVE TABLES

PLAN

0 20 50 100

SCALE: 1" = 20'

ISSUED FOR BID

HDR ENGINEERING, INC.
99 HIGH STREET, SUITE 2300
BOSTON, MASSACHUSETTS 02110-2378
(617) 357-7700

COMMONWEALTH OF MASSACHUSETTS
PHILIP FUSCO
CIVIL
No. 45868
REGISTERED PROFESSIONAL ENGINEER

Scale			
Date			
Job No.			
Designed by			
Drawn by			
Checked by	No.	Description	Date
Approved by	REVISIONS		

THE WORKS — CAMBRIDGE DEPARTMENT OF PUBLIC WORKS

Client: CITY OF CAMBRIDGE, MA

Project: RIVER STREET
INFRASTRUCTURE AND STREETSCAPE PROJECT

Drawing: **ROADWAY CURB TIE AND ALIGNMENT PLAN - 8**

Sheet: R-2.08

Total Sheets: 381

File No.

File: C:\PWWORKINGIEAST01\D07863961\7113XXX_(CURB TIE PLANS).DWG Plotted: 4/15/2022 3:01:34 PM

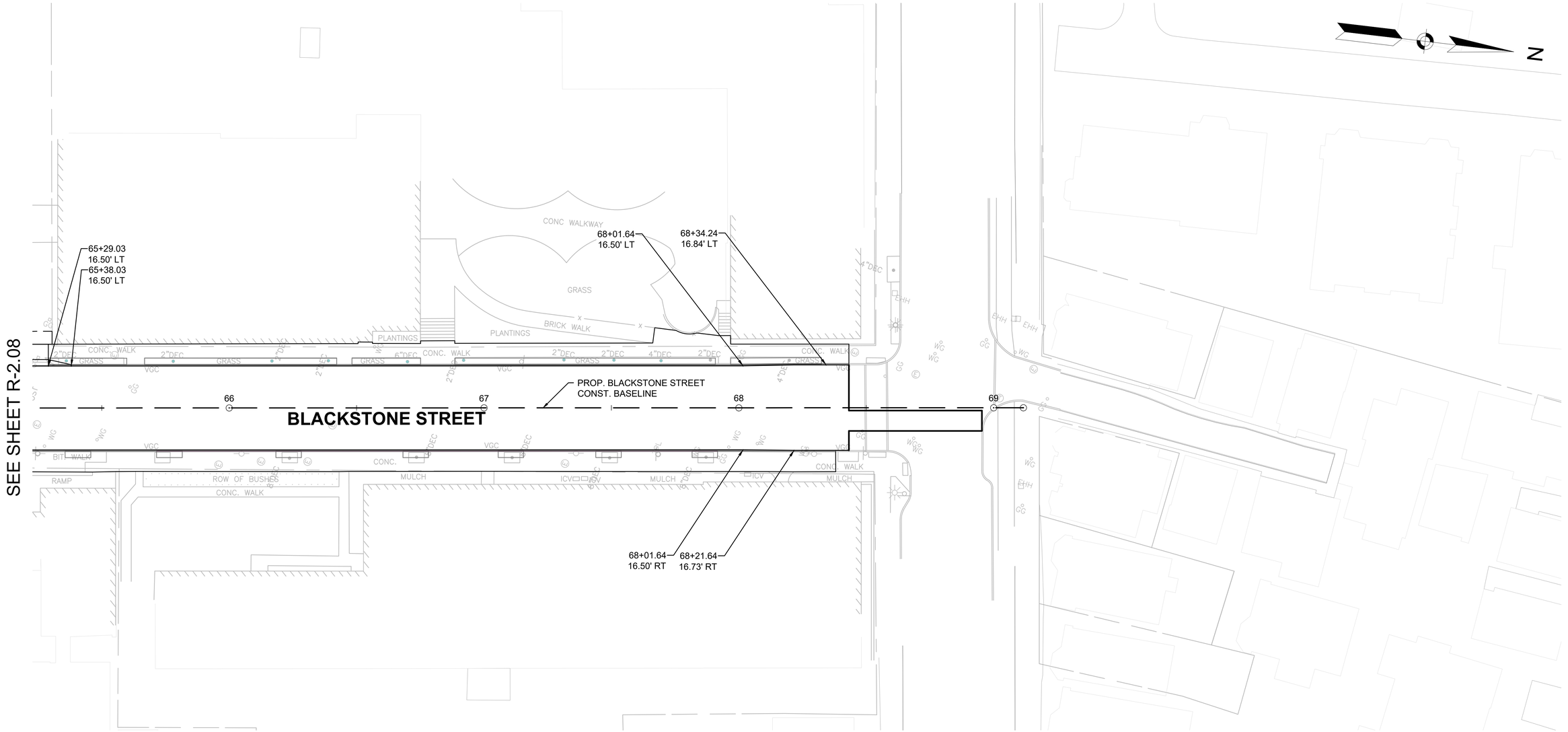

LEGEND:

EC1 CURB CURVE NUMBER

NOTES:

1. SEE SHEET R-2.19 FOR CURB CURVE TABLES

PLAN

0 20 50 100

SCALE: 1" = 20'

ISSUED FOR BID

HDR ENGINEERING, INC.
99 HIGH STREET, SUITE 2300
BOSTON, MASSACHUSETTS 02110–2378
(617) 357–7700

COMMONWEALTH OF MASSACHUSETTS
PHILIP FUSCO
CIVIL
No. 45868
REGISTERED PROFESSIONAL ENGINEER

Scale			
Date			
Job No.			
Designed by			
Drawn by			
Checked by	No.	Description	Date
Approved by	REVISIONS		

CAMBRIDGE DEPARTMENT OF PUBLIC THE WORKS

Client	CITY OF CAMBRIDGE, MA	Sheet	R-2.09
Project	RIVER STREET INFRASTRUCTURE AND STREETSCAPE PROJECT	Total Sheets	381
Drawing	**ROADWAY CURB TIE AND ALIGNMENT PLAN - 9**	File No.	

File: C:\PW\WORKING\EAST01\D0786396\7113XXX_(CURB TIE PLANS).DWG Plotted: 4/15/2022 3:01:44 PM

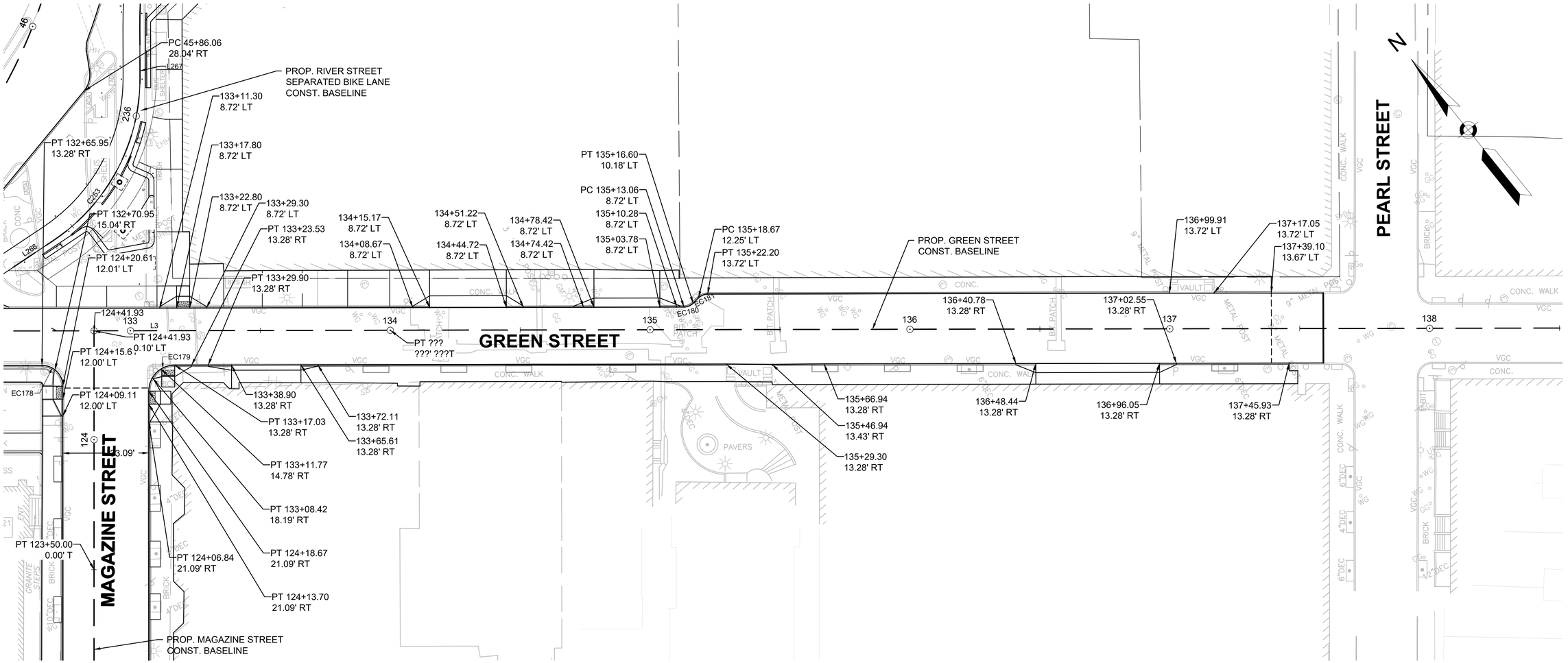

NOTES:

1. SEE SHEET R-2.19 FOR CURB CURVE TABLES

LEGEND:

EC1 CURB CURVE NUMBER

PLAN

0 20 50 100

SCALE: 1" = 20'

ISSUED FOR BID

HDR ENGINEERING, INC.
99 HIGH STREET, SUITE 2300
BOSTON, MASSACHUSETTS 02110–2378
(617) 357–7700

COMMONWEALTH OF MASSACHUSETTS
PHILIP FUSCO
CIVIL
No. 45868
REGISTERED PROFESSIONAL ENGINEER

Scale			
Date			
Job No.			
Designed by			
Drawn by			
Checked by	No.	Description	Date
Approved by	REVISIONS		

CAMBRIDGE DEPARTMENT OF PUBLIC WORKS

Client: CITY OF CAMBRIDGE, MA

Project: RIVER STREET
INFRASTRUCTURE AND STREETSCAPE PROJECT

Drawing: **ROADWAY CURB TIE AND ALIGNMENT PLAN - 10**

Sheet: R-2.10

Total Sheets: 381

File No.:

File: C:\PWWORKING\EAST\01D0786396\7113XXX_(CURB TIE PLANS).DWG Plotted: 4/15/2022 3:01:54 PM

SEE SHEET R-2.10

SEE SHEET R-2.10

SEE SHEET R-2.07

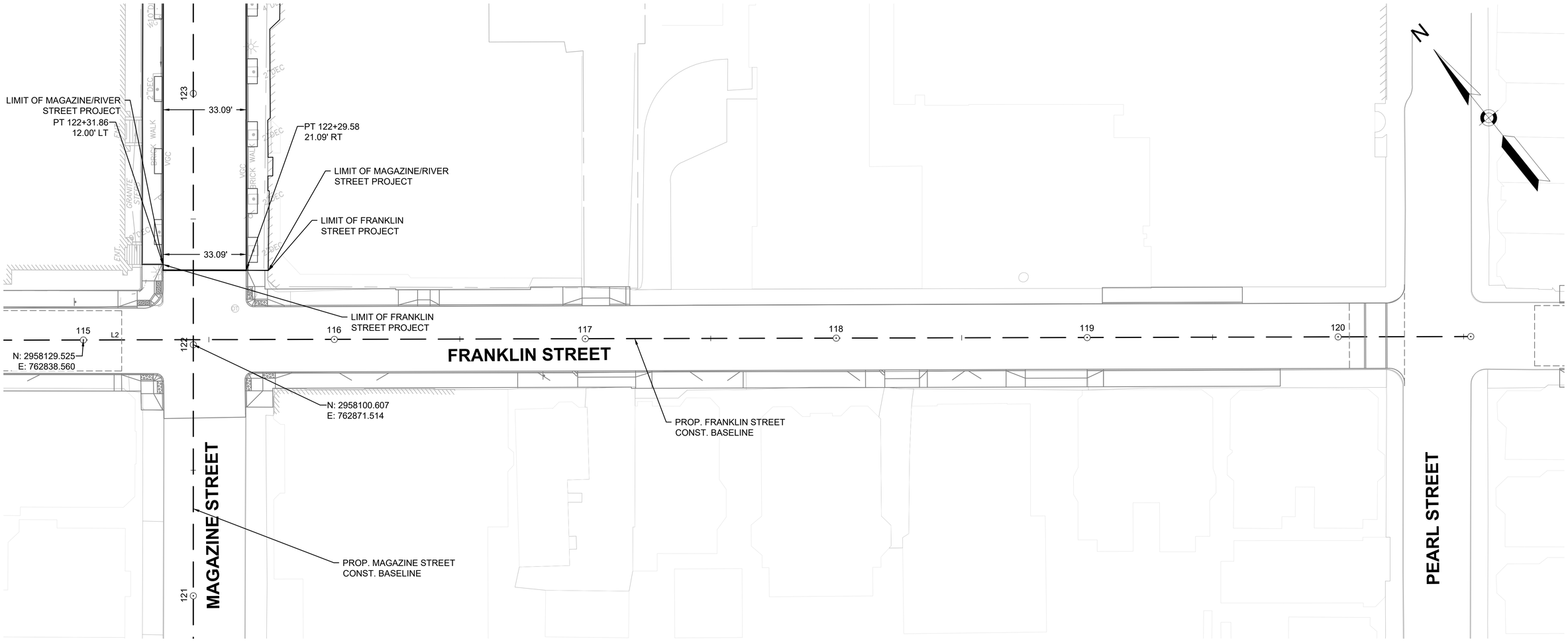

NOTES:

1. SEE SHEET R-2.19 FOR CURB CURVE TABLES

LEGEND:

EC1 CURB CURVE NUMBER

PLAN

0 20 50 100

SCALE: 1" = 20'

ISSUED FOR BID

HDR ENGINEERING, INC.
99 HIGH STREET, SUITE 2300
BOSTON, MASSACHUSETTS 02110-2378
(617) 357-7700

COMMONWEALTH OF MASSACHUSETTS
PHILIP FUSCO
CIVIL
No. 45868
REGISTERED PROFESSIONAL ENGINEER

Scale			
Date			
Job No.			
Designed by			
Drawn by			
Checked by	No.	Description	Date
Approved by	REVISIONS		

CAMBRIDGE DEPARTMENT OF PUBLIC WORKS

Client	CITY OF CAMBRIDGE, MA	Sheet	R-2.11
Project	RIVER STREET INFRASTRUCTURE AND STREETSCAPE PROJECT	Total Sheets	381
Drawing	**ROADWAY CURB TIE AND ALIGNMENT PLAN - 11**	File No.	

File: C:\PWWORKING\EAST01\D0786396\7113XXX_(CURB TIE PLANS).DWG Plotted: 4/15/2022 3:02:04 PM

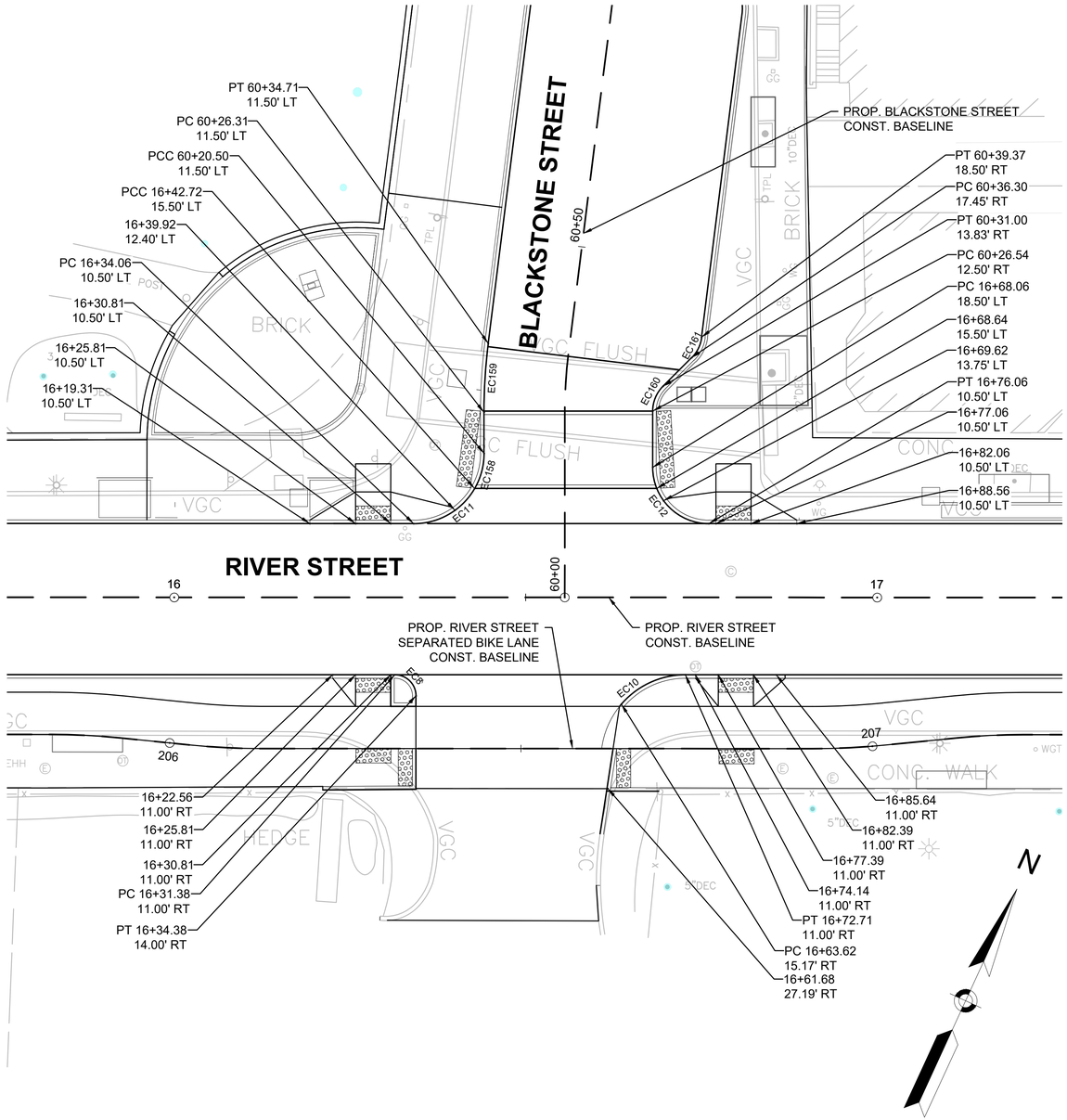

PLAN

0 10 20 30 40

SCALE: 1" = 10'

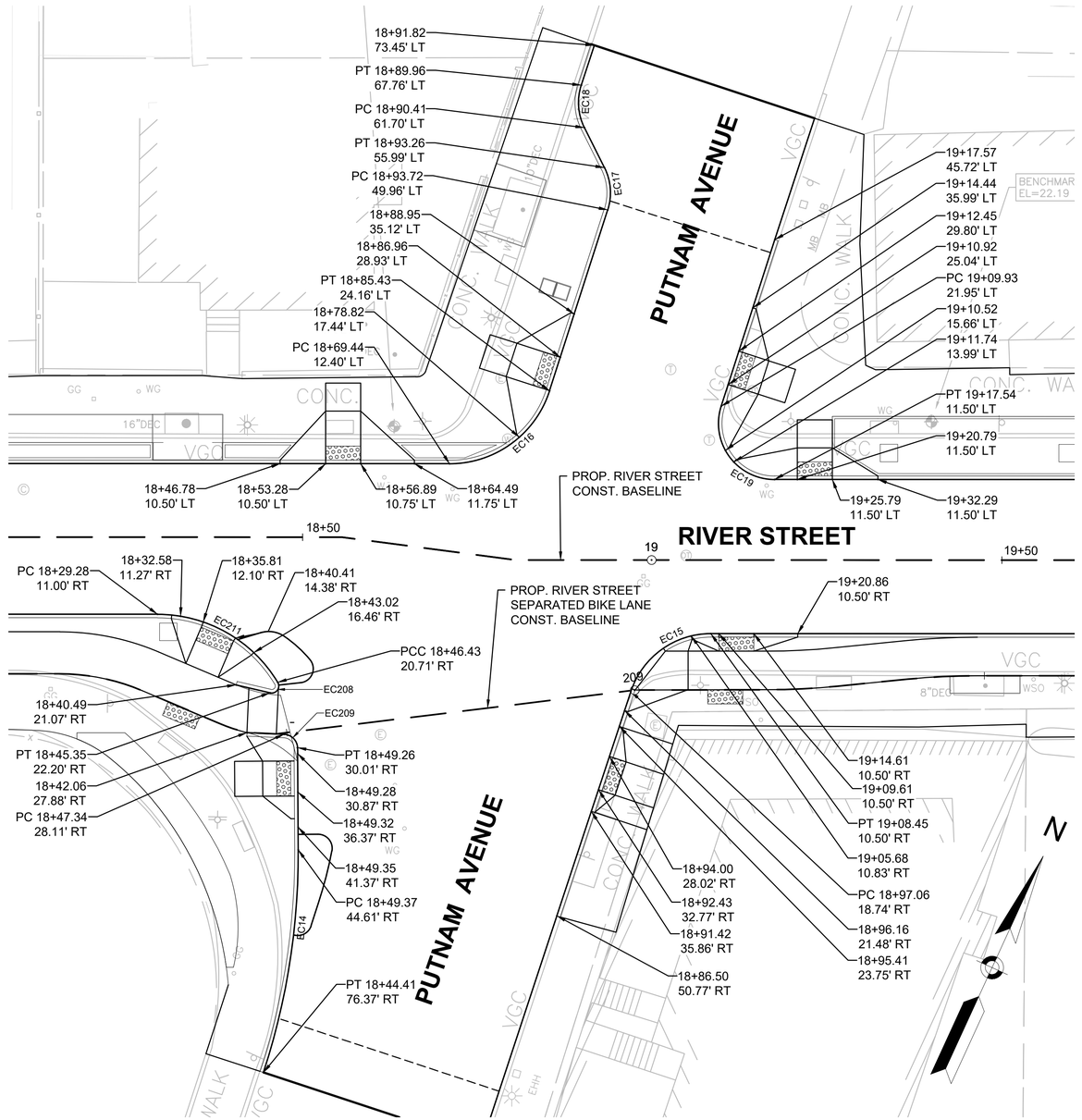

PLAN

0 10 20 30 40

SCALE: 1" = 10'

NOTES:

1. SEE SHEET R-2.19 FOR CURB CURVE TABLES

LEGEND:

EC1 CURB CURVE NUMBER

ISSUED FOR BID

HDR ENGINEERING, INC.
99 HIGH STREET, SUITE 2300
BOSTON, MASSACHUSETTS 02110–2378
(617) 357–7700

COMMONWEALTH OF MASSACHUSETTS
PHILIP FUSCO
CIVIL
No. 45868
REGISTERED PROFESSIONAL ENGINEER

Scale			
Date			
Job No.			
Designed by			
Drawn by			
Checked by	No.	Description	Date
Approved by	REVISIONS		

THE CAMBRIDGE DEPARTMENT OF PUBLIC WORKS

Client: CITY OF CAMBRIDGE, MA	Sheet: R-2.12
Project: RIVER STREET INFRASTRUCTURE AND STREETSCAPE PROJECT	Total Sheets: 381
Drawing: **CURB TIE DETAIL SHEET - 1**	File No.

File: C:\PWWORKING\EAST01\D0786396\7113XXX_(CURB TIE PLANS).DWG Plotted: 4/15/2022 3:02:19 PM

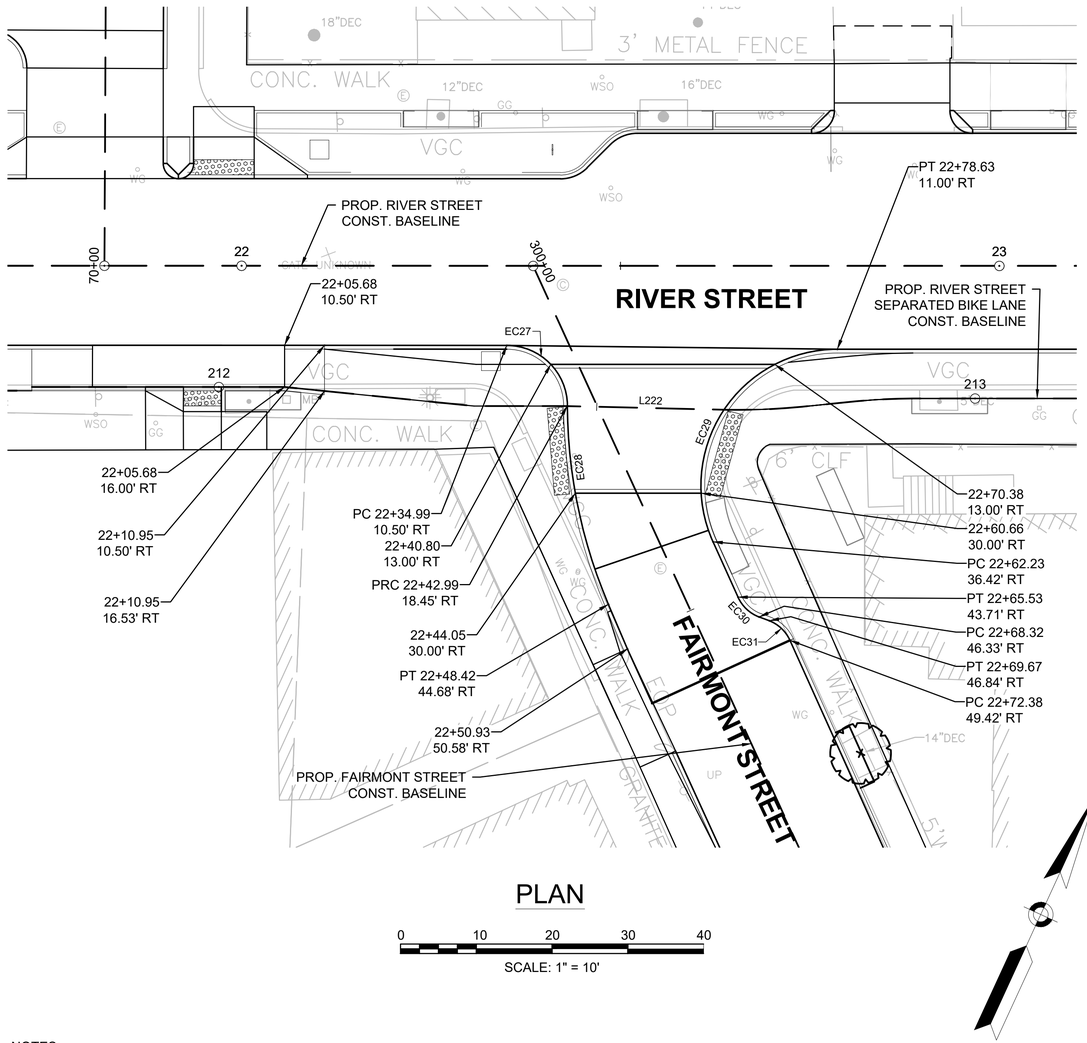

PLAN

0 10 20 30 40

SCALE: 1" = 10'

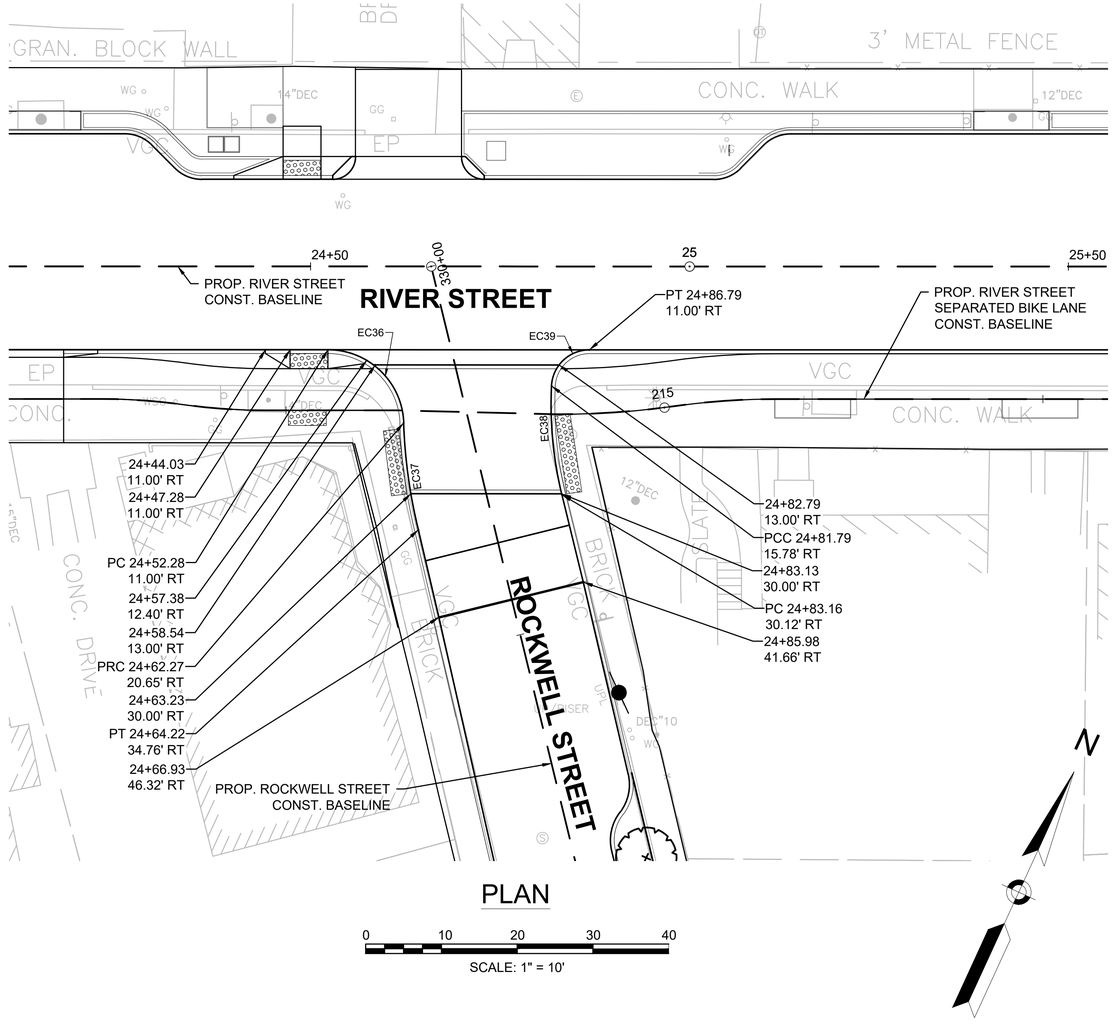

PLAN

0 10 20 30 40

SCALE: 1" = 10'

NOTES:

1. SEE SHEET R-2.19 FOR CURB CURVE TABLES

LEGEND:

EC1 CURB CURVE NUMBER

ISSUED FOR BID

HDR ENGINEERING, INC.
99 HIGH STREET, SUITE 2300
BOSTON, MASSACHUSETTS 02110–2378
(617) 357–7700

COMMONWEALTH OF MASSACHUSETTS
PHILIP FUSCO
CIVIL
No. 45868
REGISTERED PROFESSIONAL ENGINEER

Scale			
Date			
Job No.			
Designed by			
Drawn by			
Checked by	No.	Description	Date
Approved by	REVISIONS		

CAMBRIDGE DEPARTMENT OF PUBLIC WORKS

Client: CITY OF CAMBRIDGE, MA	Sheet: R-2.13
Project: RIVER STREET INFRASTRUCTURE AND STREETSCAPE PROJECT	Total Sheets: 381
Drawing: **CURB TIE DETAIL SHEET - 2**	File No.

File: C:\PWWORKING\EAST\011D0786396\7113XXX_(CURB TIE PLANS).DWG Plotted: 4/15/2022 3:02:34 PM

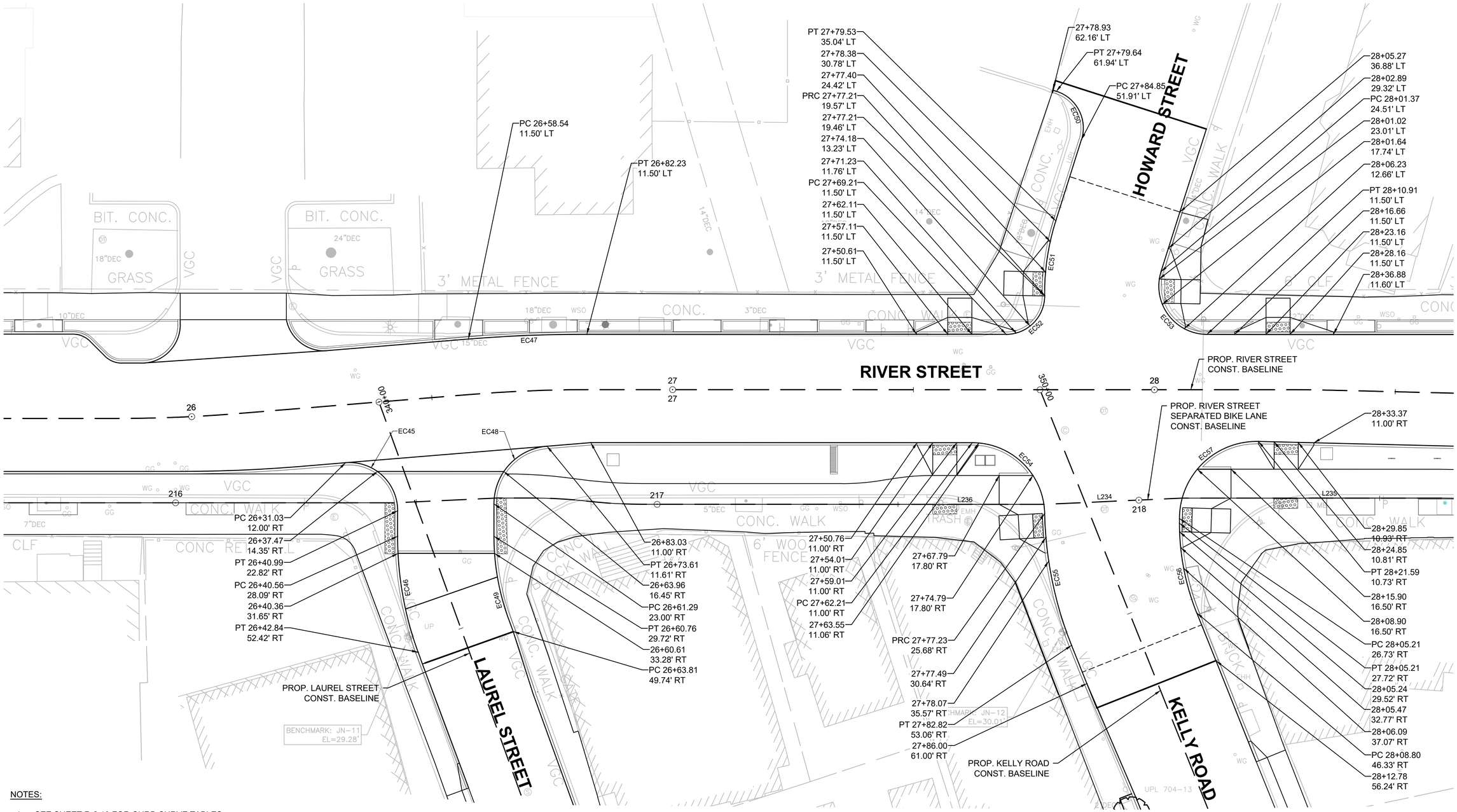

NOTES:

1. SEE SHEET R-2.19 FOR CURB CURVE TABLES

LEGEND:

EC1 CURB CURVE NUMBER

PLAN

0 10 20 30 40

SCALE: 1" = 10'

ISSUED FOR BID

HDR ENGINEERING, INC.
99 HIGH STREET, SUITE 2300
BOSTON, MASSACHUSETTS 02110-2378
(617) 357-7700

COMMONWEALTH OF MASSACHUSETTS
PHILIP FUSCO
CIVIL
No. 45868
REGISTERED PROFESSIONAL ENGINEER

Scale			
Date			
Job No.			
Designed by			
Drawn by			
Checked by	No.	Description	Date
Approved by	REVISIONS		

CAMBRIDGE DEPARTMENT OF PUBLIC THE WORKS

Client: CITY OF CAMBRIDGE, MA	Sheet: R-2.14
Project: RIVER STREET INFRASTRUCTURE AND STREETSCAPE PROJECT	Total Sheets: 381
Drawing: **CURB TIE DETAIL SHEET - 3**	File No.

File: C:\PW\WORKING\EAST01\D0786396\7113XXX_(CURB TIE PLANS).DWG Plotted: 4/15/2022 3:02:44 PM

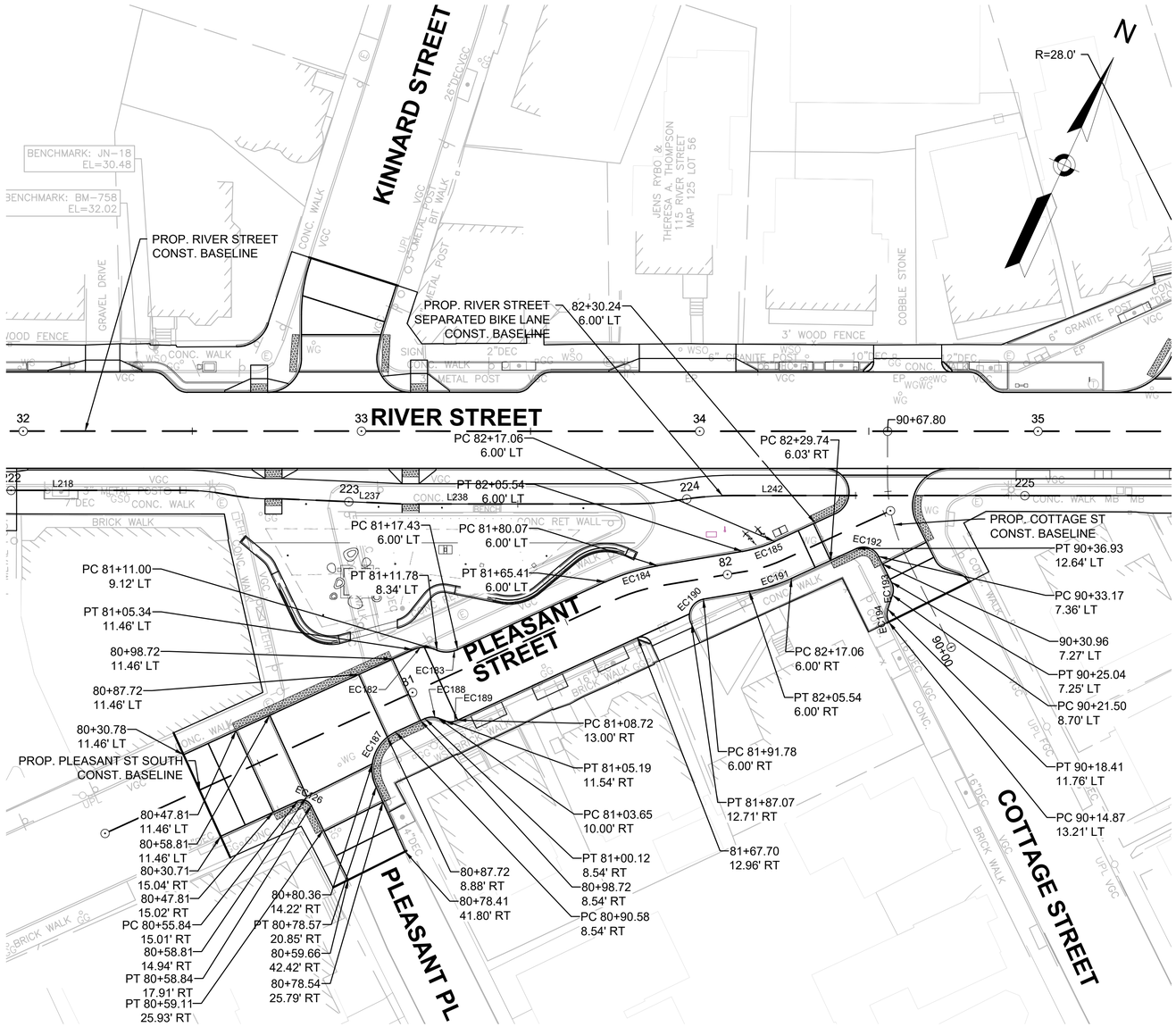

PLAN

0 20 50 100

SCALE: 1" = 20'

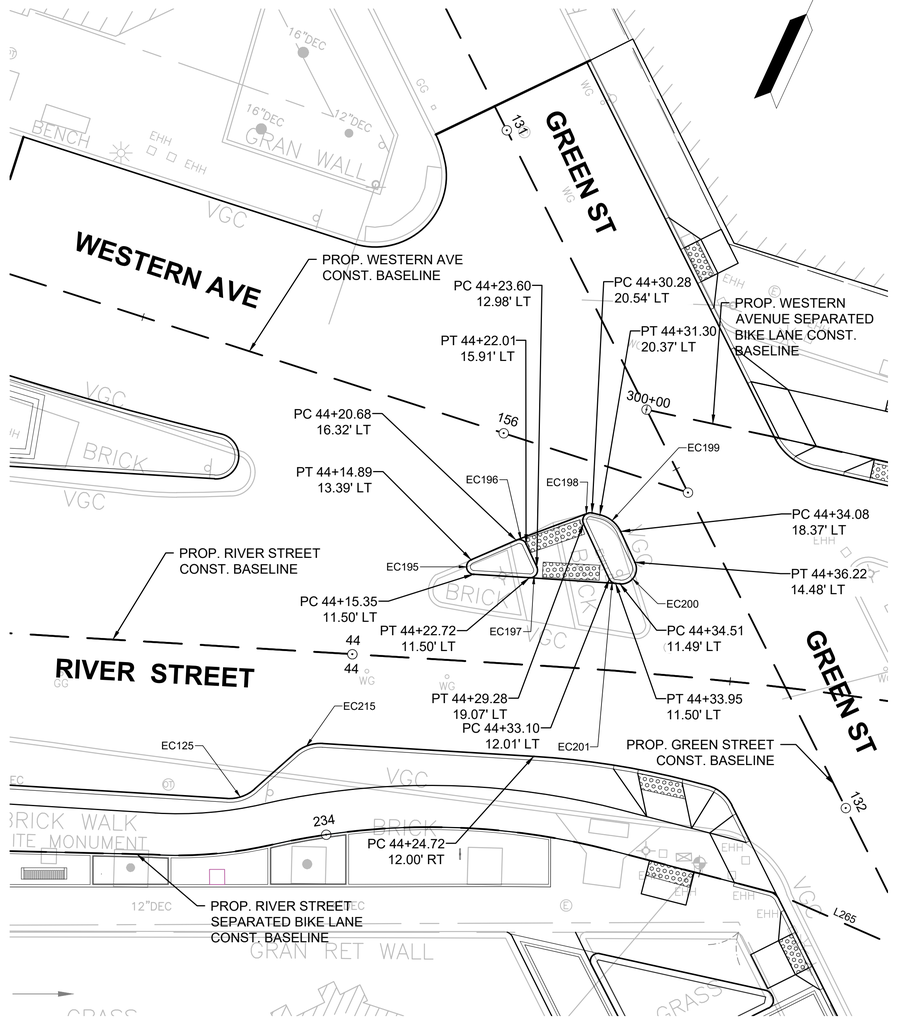

PLAN

0 10 20 30 40

SCALE: 1" = 10'

NOTES:

1. SEE SHEET R-2.19 FOR CURB CURVE TABLES

LEGEND:

EC1 CURB CURVE NUMBER

File: C:\PWWORKINGIEAST01\D0786396\7113XXX_(CURB TIE PLANS).DWG Plotted: 4/15/2022 3:02:59 PM

ISSUED FOR BID

HDR ENGINEERING, INC.
99 HIGH STREET, SUITE 2300
BOSTON, MASSACHUSETTS 02110-2378
(617) 357-7700

COMMONWEALTH OF MASSACHUSETTS
PHILIP FUSCO
CIVIL
No. 45868
REGISTERED PROFESSIONAL ENGINEER

Scale			
Date			
Job No.			
Designed by			
Drawn by			
Checked by	No.	Description	Date
Approved by	REVISIONS		

THE WORKS — CAMBRIDGE DEPARTMENT OF PUBLIC

Client: CITY OF CAMBRIDGE, MA	Sheet: R-2.15
Project: RIVER STREET INFRASTRUCTURE AND STREETSCAPE PROJECT	Total Sheets: 381
Drawing: **CURB TIE DETAIL SHEET - 4**	File No.

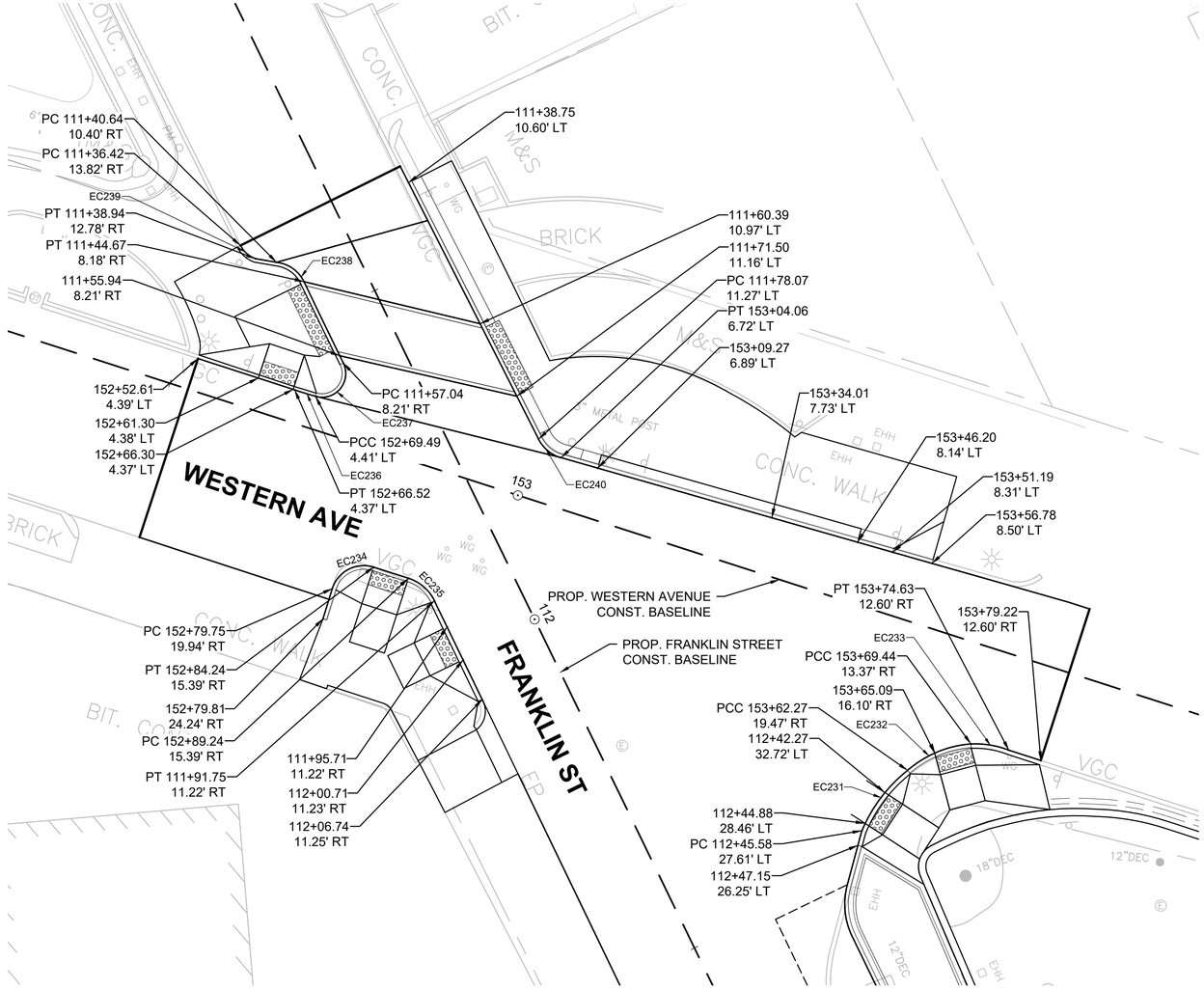

PLAN

0 10 20 30 40

SCALE: 1" = 10'

NOTES:

1. SEE SHEET R-2.19 FOR CURB CURVE TABLES

LEGEND:

EC1 CURB CURVE NUMBER

ISSUED FOR BID

HDR ENGINEERING, INC.
99 HIGH STREET, SUITE 2300
BOSTON, MASSACHUSETTS 02110–2378
(617) 357–7700

COMMONWEALTH OF MASSACHUSETTS
PHILIP FUSCO
CIVIL
No. 45868
REGISTERED PROFESSIONAL ENGINEER

Scale			
Date			
Job No.			
Designed by			
Drawn by			
Checked by	No.	Description	Date
Approved by	REVISIONS		

THE WORKS — CAMBRIDGE DEPARTMENT OF PUBLIC

Client	CITY OF CAMBRIDGE, MA	Sheet	R-2.15A
Project	RIVER STREET INFRASTRUCTURE AND STREETSCAPE PROJECT	Total Sheets	381
Drawing	**CURB TIE DETAIL SHEET - 4A**	File No.	

File: C:\PWWORKINGIEAST01\D0786396\7113XXX_(CURB TIE PLANS).DWG Plotted: 4/15/2022 3:03:09 PM

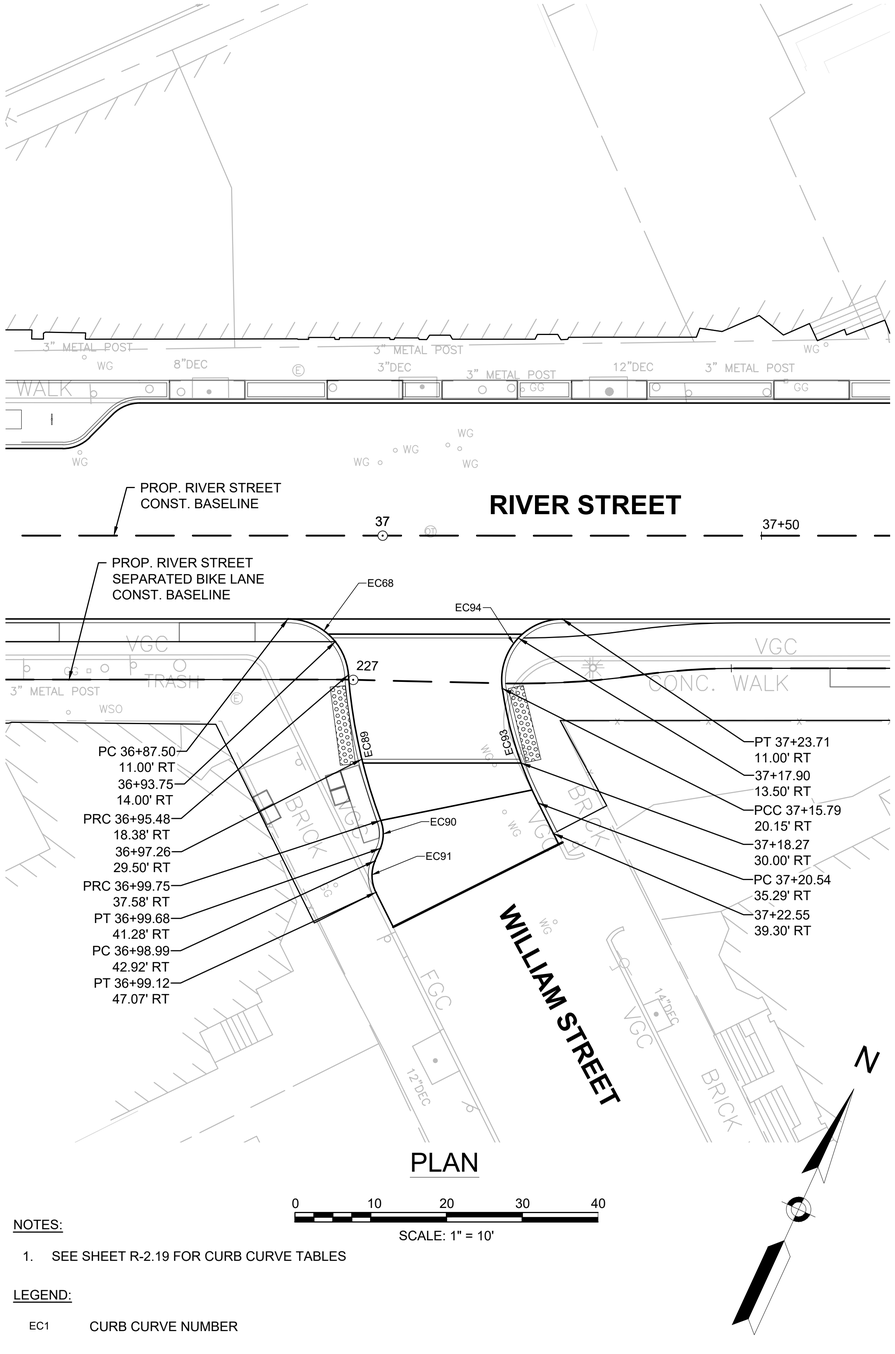

NOTES:

1. SEE SHEET R-2.19 FOR CURB CURVE TABLES

LEGEND:

EC1 CURB CURVE NUMBER

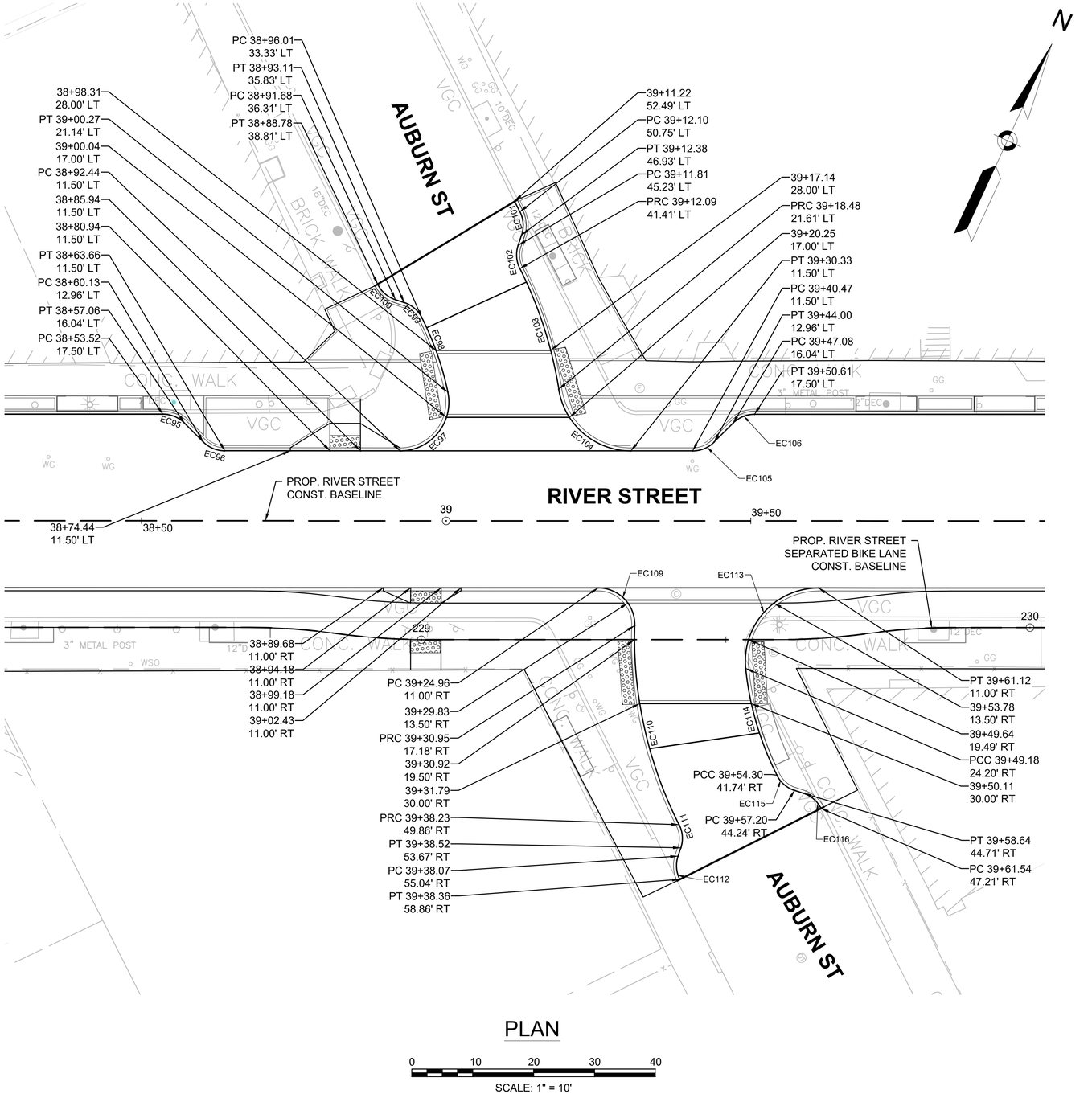

ISSUED FOR BID

HDR ENGINEERING, INC.
99 HIGH STREET, SUITE 2300
BOSTON, MASSACHUSETTS 02110-2378
(617) 357-7700

COMMONWEALTH OF MASSACHUSETTS
PHILIP FUSCO
CIVIL
No. 45868
REGISTERED PROFESSIONAL ENGINEER

Scale			
Date			
Job No.			
Designed by			
Drawn by			
Checked by	No.	Description	Date
Approved by	REVISIONS		

CAMBRIDGE DEPARTMENT OF PUBLIC WORKS

Client: CITY OF CAMBRIDGE, MA	Sheet: R-2.16
Project: RIVER STREET INFRASTRUCTURE AND STREETSCAPE PROJECT	Total Sheets: 381
Drawing: **CURB TIE DETAIL SHEET - 5**	File No.

File: C:\PWWORKING\EAST01\D07863961\7113XXX_(CURB TIE PLANS).DWG Plotted: 4/15/2022 3:03:25 PM

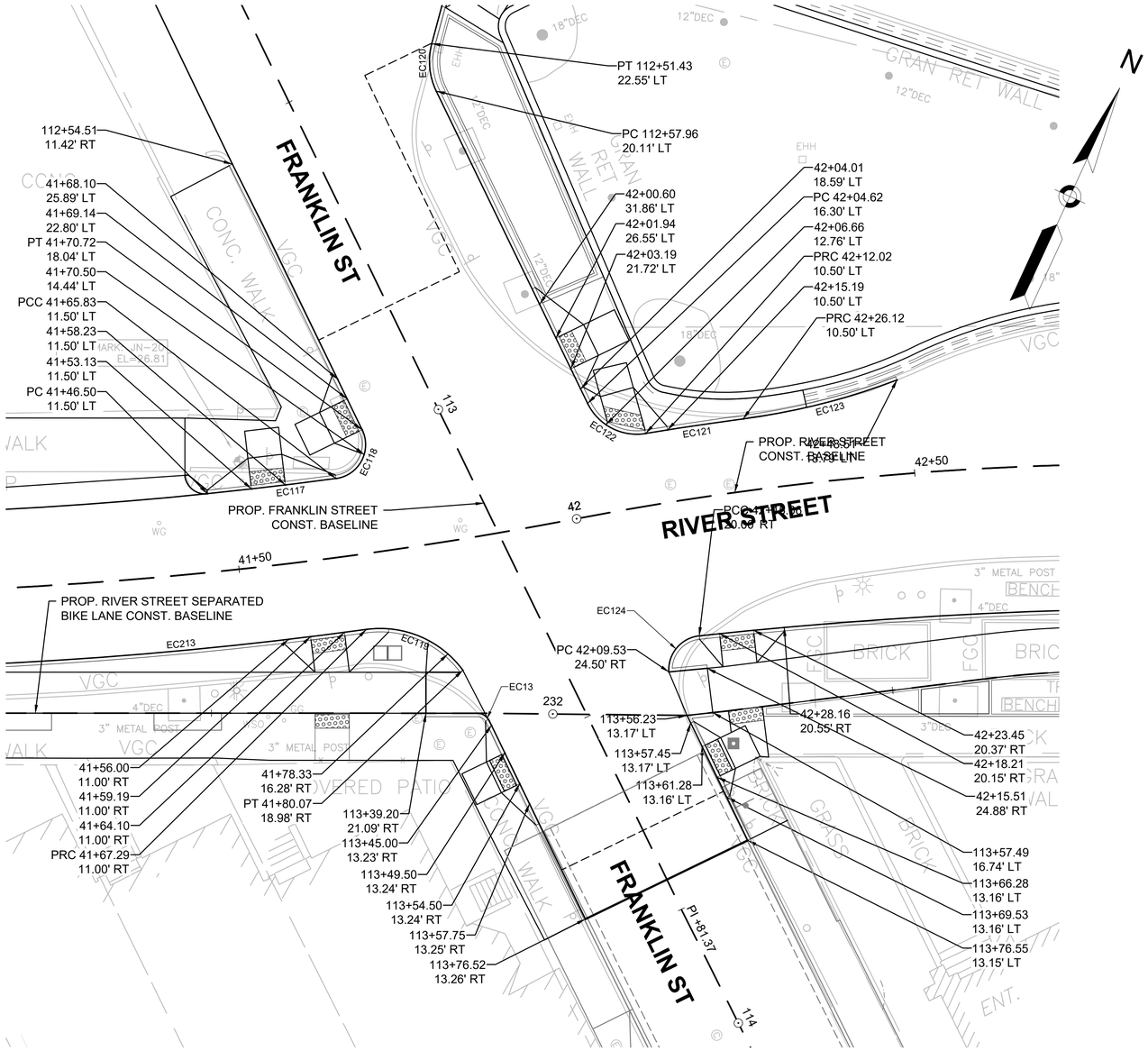

PLAN

0 10 20 30 40

SCALE: 1" = 10'

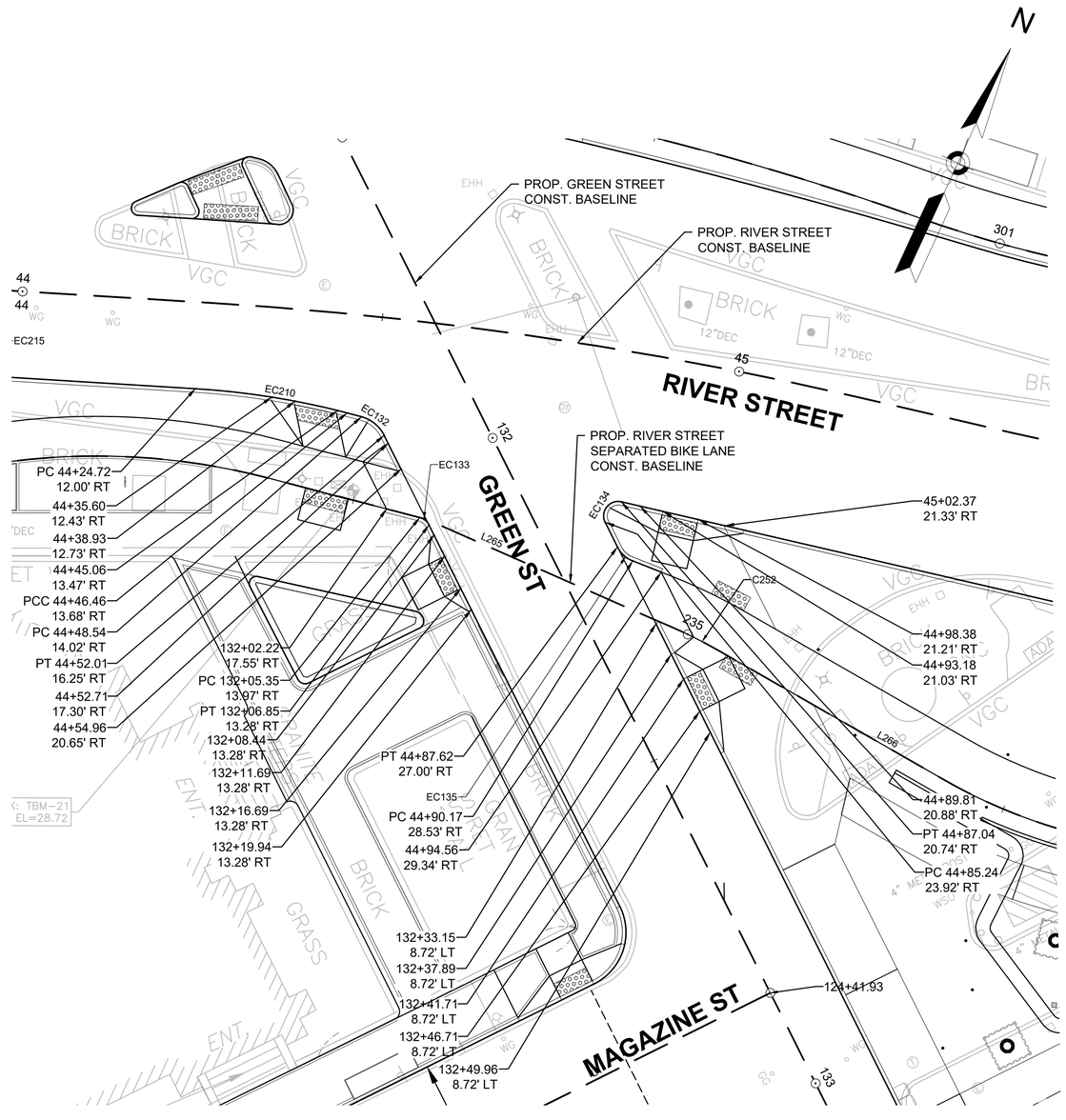

PLAN

0 10 20 30 40

SCALE: 1" = 10'

NOTES:

1. SEE SHEET R-2.19 FOR CURB CURVE TABLES

LEGEND:

EC1 CURB CURVE NUMBER

ISSUED FOR BID

HDR ENGINEERING, INC.
99 HIGH STREET, SUITE 2300
BOSTON, MASSACHUSETTS 02110-2378
(617) 357-7700

COMMONWEALTH OF MASSACHUSETTS
PHILIP FUSCO
CIVIL
No. 45868
REGISTERED PROFESSIONAL ENGINEER

Scale			
Date			
Job No.			
Designed by			
Drawn by			
Checked by	No.	Description	Date
Approved by	REVISIONS		

THE WORKS — CAMBRIDGE DEPARTMENT OF PUBLIC WORKS

Client: CITY OF CAMBRIDGE, MA

Project: RIVER STREET
INFRASTRUCTURE AND STREETSCAPE PROJECT

Drawing: **CURB TIE DETAIL SHEET - 6**

Sheet: R-2.17

Total Sheets: 381

File No.

File: C:\PWWORKING\EAST01\D0786396\I7113XXX_(CURB TIE PLANS).DWG Plotted: 4/15/2022 3:03:40 PM

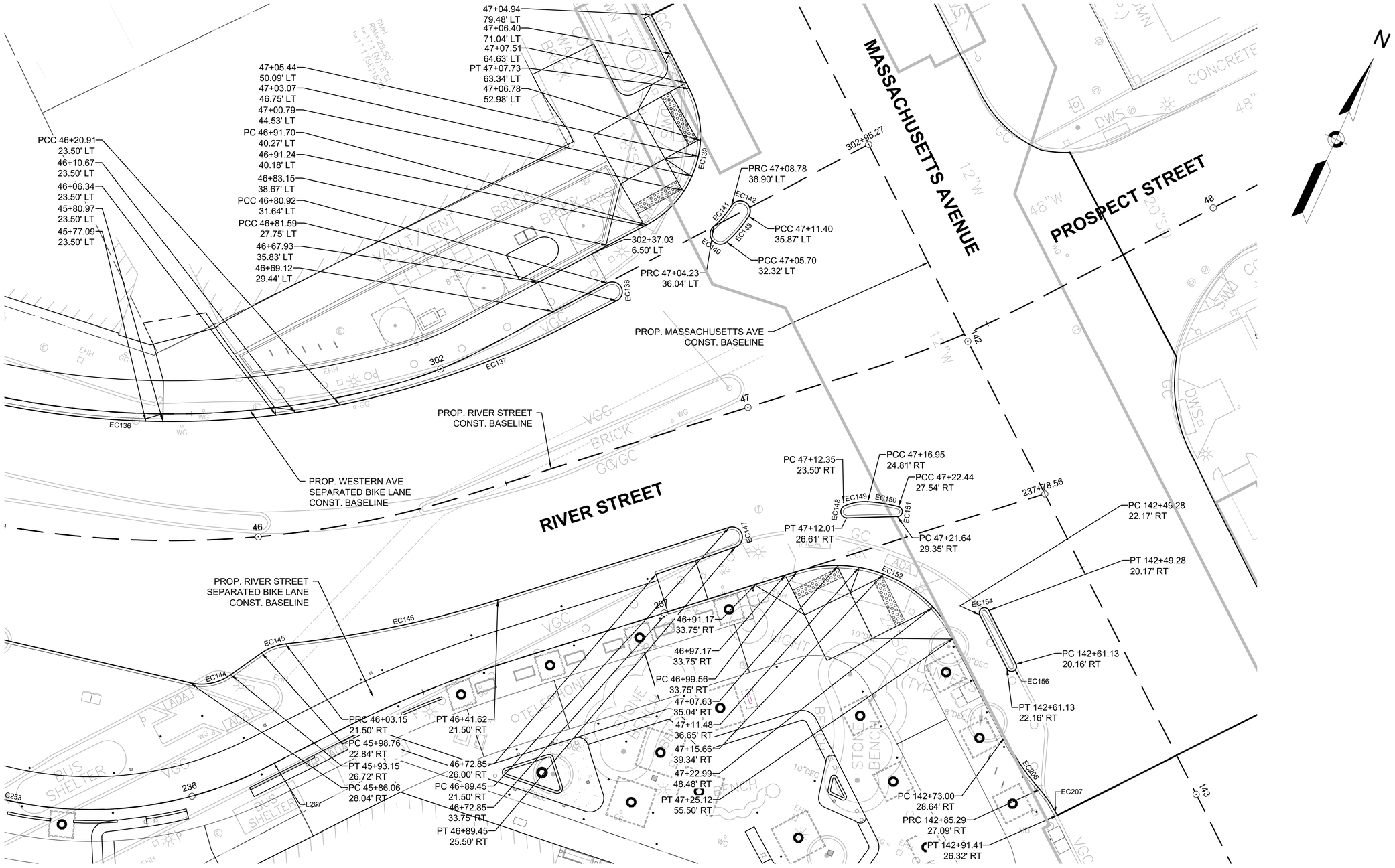

PLAN

LEGEND:

EC1 CURB CURVE NUMBER

NOTES:

1. SEE SHEET R-2.19 FOR CURB CURVE TABLES

0 10 20 30 40

SCALE: 1" = 10'

ISSUED FOR BID

HDR ENGINEERING, INC.
99 HIGH STREET, SUITE 2300
BOSTON, MASSACHUSETTS 02110-2378
(617) 357-7700

COMMONWEALTH OF MASSACHUSETTS
PHILIP FUSCO
CIVIL
No. 45868
REGISTERED PROFESSIONAL ENGINEER

Scale			
Date			
Job No.			
Designed by			
Drawn by			
Checked by	No.	Description	Date
Approved by	REVISIONS		

THE WORKS — CAMBRIDGE DEPARTMENT OF PUBLIC WORKS

Client: CITY OF CAMBRIDGE, MA

Project: RIVER STREET
INFRASTRUCTURE AND STREETSCAPE PROJECT

Drawing: **CURB TIE DETAIL SHEET - 7**

Sheet: R-2.18

Total Sheets: 381

File No.

File: C:\PWWORKING\EAST01\D07863961\7113XXX_(CURB TIE PLANS).DWG Plotted: 4/15/2022 3:03:50 PM

CURB CURVE TABLE

CURVE	LENGTH (FT)	RADIUS (FT)	DELTA (DEG-MIN-SEC)	TANGENT (FT)
EC1	14.73'	12.00'	70°19'35"	8.45
EC2	2.35'	1.50'	89°40'43"	1.49
EC3	28.74'	14.99'	109°48'31"	21.34
EC4	26.16'	300.00'	4°59'48"	13.09
EC5	26.16'	300.00'	4°59'48"	13.09
EC6	26.16'	300.00'	4°59'48"	13.09
EC7	26.16'	300.00'	4°59'48"	13.09
EC8	4.71'	3.00'	90°00'00"	3.00
EC9	15.71'	10.00'	90°00'00"	10.00
EC10	10.32'	12.00'	49°17'39"	5.51
EC11	15.71'	10.00'	90°00'00"	10.00
EC12	12.57'	8.00'	90°00'00"	8.00
EC13	2.24'	2.00'	64°06'37"	1.25
EC14	32.29'	100.00'	18°30'09"	16.29
EC15	15.03'	12.00'	71°45'05"	8.68
EC16	18.90'	15.00'	72°10'33"	10.93
EC17	6.20'	8.00'	44°24'21"	3.27
EC18	6.24'	8.00'	44°41'33"	3.29
EC19	15.06'	8.00'	107°49'27"	10.98
EC20	3.93'	5.00'	45°00'00"	2.07
EC21	3.93'	5.00'	45°00'00"	2.07
EC22	3.93'	5.00'	45°00'00"	2.07
EC23	3.93'	5.00'	45°00'00"	2.07
EC24	7.85'	5.00'	90°00'00"	5.00
EC25	3.93'	5.00'	45°00'00"	2.07
EC26	3.93'	5.00'	45°00'00"	2.07
EC27	12.52'	8.00'	89°39'37"	7.95
EC28	26.96'	68.00'	22°42'52"	13.66
EC29	35.92'	18.00'	114°20'58"	27.90
EC30	3.93'	5.00'	45°00'00"	2.07
EC31	3.83'	5.01'	43°52'38"	2.02
EC32	3.93'	5.00'	45°00'00"	2.07
EC33	3.93'	5.00'	45°00'00"	2.07
EC34	3.93'	5.00'	45°00'00"	2.07
EC35	3.93'	5.00'	45°00'00"	2.07
EC36	15.36'	10.00'	88°00'59"	9.66
EC37	14.26'	69.50'	11°45'23"	7.16
EC38	14.46'	49.85'	16°37'10"	7.28
EC39	7.64'	5.00'	87°29'35"	4.79
EC40	3.93'	5.00'	45°00'00"	2.07
EC41	3.93'	5.00'	45°00'00"	2.07
EC42	12.57'	8.00'	90°00'00"	8.00
EC43	11.65'	8.00'	83°28'00"	7.14
EC44	24.60'	300.00'	4°41'52"	12.31
EC45	16.53'	10.00'	94°43'47"	10.86

CURB CURVE TABLE

CURVE	LENGTH (FT)	RADIUS (FT)	DELTA (DEG-MIN-SEC)	TANGENT (FT)
EC46	24.56'	70.00'	20°06'04"	12.41
EC47	24.60'	300.00'	4°41'55"	12.31
EC48	17.87'	12.00'	85°18'05"	11.05
EC49	17.54'	50.00'	20°06'04"	8.86
EC50	12.55'	8.00'	89°54'50"	7.99
EC51	15.71'	50.00'	18°00'00"	7.92
EC52	12.63'	8.00'	90°29'17"	8.07
EC53	18.76'	10.00'	107°30'43"	13.64
EC54	23.26'	15.00'	88°50'21"	14.70
EC55	28.09'	78.00'	20°38'07"	14.20
EC56	19.07'	50.00'	21°51'22"	9.65
EC57	25.52'	16.00'	91°22'46"	16.39
EC58	12.22'	12.00'	58°21'09"	6.70
EC59	7.97'	5.00'	91°22'46"	5.12
EC60	3.49'	5.00'	39°59'44"	1.82
EC61	3.37'	5.00'	38°36'58"	1.75
EC62	12.76'	8.00'	91°22'46"	8.19
EC63	23.45'	76.00'	17°40'36"	11.82
EC64	10.26'	35.00'	16°48'14"	5.17
EC65	12.50'	8.00'	89°29'36"	7.93
EC66	4.05'	5.00'	46°22'46"	2.14
EC67	3.93'	5.00'	45°00'00"	2.07
EC68	11.94'	8.00'	85°32'32"	7.40
EC69	3.93'	5.00'	45°00'00"	2.07
EC70	3.93'	5.00'	45°00'05"	2.07
EC71	15.71'	10.00'	90°00'00"	10.00
EC72	15.42'	50.00'	17°40'03"	7.77
EC73	8.55'	50.00'	9°47'51"	4.29
EC74	17.08'	10.00'	97°52'12"	11.48
EC75	3.93'	5.00'	45°00'00"	2.07
EC76	3.93'	5.00'	45°00'00"	2.07
EC77	22.36'	11.00'	116°27'32"	17.76
EC78	3.93'	5.00'	45°00'00"	2.07
EC79	3.93'	5.00'	45°00'00"	2.07
EC80	3.93'	5.00'	45°00'00"	2.07
EC81	3.93'	5.00'	45°00'00"	2.07
EC82	24.33'	18.00'	77°26'39"	14.43
EC83	11.24'	28.00'	23°00'15"	5.70
EC84	21.78'	8.00'	155°57'53"	37.58
EC85	3.93'	5.00'	45°00'00"	2.07
EC86	3.93'	5.00'	45°00'00"	2.07
EC87	3.93'	5.00'	45°00'00"	2.07
EC88	3.93'	5.00'	45°00'00"	2.07
EC89	19.74'	70.00'	16°09'25"	9.94
EC90	3.79'	5.00'	43°23'42"	1.99

CURB CURVE TABLE

CURVE	LENGTH (FT)	RADIUS (FT)	DELTA (DEG-MIN-SEC)	TANGENT (FT)
EC91	4.28'	5.00'	49°05'34"	2.28
EC93	15.93'	50.00'	18°15'19"	8.03
EC94	13.73'	8.00'	98°17'57"	9.25
EC95	3.93'	5.00'	45°00'00"	2.07
EC96	3.93'	5.00'	45°00'00"	2.07
EC97	14.22'	8.00'	101°50'43"	9.85
EC98	12.95'	50.00'	14°50'10"	6.51
EC99	3.93'	5.00'	45°00'00"	2.07
EC100	3.93'	5.00'	45°00'00"	2.07
EC101	3.93'	5.00'	45°00'00"	2.07
EC102	3.93'	5.00'	45°00'00"	2.07
EC103	20.89'	68.00'	17°36'15"	10.53
EC104	16.95'	12.00'	80°55'22"	10.23
EC105	3.93'	5.00'	45°00'00"	2.07
EC106	3.93'	5.00'	45°00'00"	2.07
EC107	3.93'	5.00'	45°00'00"	2.07
EC108	3.93'	5.00'	45°00'00"	2.07
EC109	9.60'	6.00'	91°41'52"	6.18
EC110	33.83'	68.00'	28°30'21"	17.27
EC111	3.92'	5.00'	44°57'09"	2.07
EC112	3.93'	5.00'	45°00'58"	2.07
EC113	20.05'	12.00'	95°45'03"	13.27
EC114	18.38'	50.00'	21°03'26"	9.29
EC115	3.93'	5.00'	45°00'00"	2.07
EC116	3.93'	5.00'	45°00'00"	2.07
EC117	18.96'	599.00'	1°48'50"	9.48
EC118	9.44'	5.00'	108°11'59"	6.91
EC119	16.10'	15.00'	61°28'43"	8.92
EC120	7.12'	10.01'	40°46'14"	3.72
EC121	14.44'	450.45'	1°50'14"	7.22
EC122	10.27'	8.00'	73°31'46"	5.98
EC123	23.28'	100.00'	13°20'29"	11.70
EC124	7.63'	5.00'	87°26'35"	4.78
EC125	3.93'	5.00'	45°00'00"	2.07
EC126	4.62'	3.00'	88°10'36"	2.91
EC127	6.00'	165.00'	2°05'03"	3.00
EC128	8.89'	3.00'	169°45'40"	33.49
EC129	36.93'	500.00'	4°13'53"	18.47
EC130	7.12'	8.00'	50°59'18"	3.81
EC131	73.49'	1011.00'	4°09'54"	36.76
EC132	4.17'	5.00'	47°44'41"	2.21
EC133	1.70'	2.00'	48°48'58"	0.91
EC134	4.52'	2.00'	129°35'24"	4.25
EC135	2.93'	4.00'	41°54'21"	1.53
EC136	82.66'	170.00'	27°51'29"	42.16

CURB CURVE TABLE

CURVE	LENGTH (FT)	RADIUS (FT)	DELTA (DEG-MIN-SEC)	TANGENT (FT)
EC137	45.43'	170.00'	15°18'44"	22.85
EC138	3.13'	2.00'	89°32'58"	1.98
EC139	31.15'	20.00'	89°14'27"	19.74
EC140	6.25'	2.00'	179°10'38"	278.54
EC141	5.40'	18.00'	17°12'11"	2.72
EC142	6.28'	2.00'	180°00'00"	INFINITY
EC143	6.74'	21.85'	17°39'55"	3.40
EC144	8.45'	10.00'	48°24'22"	4.49
EC145	5.13'	10.00'	29°23'41"	2.62
EC146	42.75'	215.00'	11°23'33"	21.45
EC147	6.22'	2.00'	178°15'52"	132.05
EC148	3.31'	1.25'	151°55'09"	5.00
EC149	4.67'	10.00'	26°44'18"	2.38
EC150	6.14'	31.00'	11°20'39"	3.08
EC151	2.86'	1.00'	163°42'54"	6.99
EC152	36.56'	26.00'	80°34'11"	22.04
EC154	3.14'	1.00'	180°00'00"	INFINITY
EC156	3.14'	1.00'	180°00'33"	12332.34
EC158	15.71'	10.00'	90°00'00"	10.00
EC159	9.83'	79.00'	7°07'38"	4.92
EC160	3.93'	5.00'	45°00'00"	2.07
EC161	3.31'	5.00'	37°52'22"	1.72
EC162	4.87'	5.00'	55°46'30"	2.65
EC163	4.24'	5.00'	48°33'53"	2.26
EC164	47.47'	150.00'	18°08'00"	23.94
EC165	47.47'	150.00'	18°08'00"	23.94
EC166	47.47'	150.00'	18°08'00"	23.94
EC167	3.93'	5.00'	45°00'00"	2.07
EC168	3.95'	5.00'	45°15'46"	2.08
EC169	34.05'	183.00'	10°39'35"	17.07
EC170	3.93'	5.00'	45°00'00"	2.07
EC171	3.93'	5.00'	45°00'00"	2.07
EC172	3.93'	5.00'	45°00'00"	2.07
EC173	3.93'	5.00'	45°00'00"	2.07
EC174	3.93'	5.00'	45°00'00"	2.07
EC175	3.93'	5.00'	45°00'00"	2.07
EC176	3.93'	5.00'	45°00'00"	2.07
EC177	3.93'	5.00'	45°00'00"	2.07
EC178	12.58'	8.00'	90°04'34"	8.01
EC179	15.69'	10.00'	89°53'51"	9.98
EC180	3.93'	5.00'	45°00'00"	2.07
EC181	3.93'	5.00'	45°00'00"	2.07
EC182	6.28'	8.00'	45°00'00"	3.31
EC183	6.28'	8.00'	45°00'00"	3.31
EC184	16.23'	62.00'	15°00'00"	8.16

CURB CURVE TABLE

CURVE	LENGTH (FT)	RADIUS (FT)	DELTA (DEG-MIN-SEC)	TANGENT (FT)
EC185	9.95'	38.00'	15°00'00"	5.00
EC186	18.98'	7.00'	155°22'45"	32.08
EC187	18.76'	12.00'	89°33'56"	11.91
EC188	3.93'	5.00'	45°00'00"	2.07
EC189	3.93'	5.00'	45°00'00"	2.07
EC190	8.91'	5.00'	102°04'19"	6.18
EC191	13.09'	50.00'	15°00'00"	6.58
EC192	7.68'	5.00'	87°57'21"	4.82
EC193	3.93'	5.00'	45°00'00"	2.07
EC194	3.93'	5.00'	45°00'00"	2.07
EC195	2.67'	1.00'	153°07'04"	4.18
EC196	1.54'	1.00'	88°23'28"	0.97
EC197	2.07'	1.00'	118°29'28"	1.68
EC198	2.23'	1.00'	128°01'00"	2.05
EC199	3.63'	4.00'	51°59'00"	1.95
EC200	4.18'	2.00'	119°47'09"	3.45
EC201	1.06'	1.00'	60°37'07"	0.58
EC202	12.57'	4.00'	179°59'58"	906354.29
EC204	10.68'	20.00'	30°35'52"	5.47
EC205	10.41'	19.50'	30°35'53"	5.33
EC206	12.41'	50.00'	14°13'28"	6.24
EC207	6.19'	25.00'	14°10'33"	3.11
EC208	2.34'	1.00'	134°00'40"	2.36
EC209	2.96'	2.00'	84°40'16"	1.82
EC210	21.35'	110.00'	11°07'10"	10.71
EC211	20.61'	20.00'	59°02'29"	11.32
EC212	13.55'	599.00'	1°17'46"	6.78
EC213	84.73'	621.50'	7°48'40"	42.43
EC214	118.05'	700.00'	9°39'44"	59.16
EC215	3.93'	5.00'	45°00'00"	2.07
EC231	10.47'	20.66'	29°01'36"	5.35
EC232	9.57'	15.00'	36°32'10"	4.95
EC233	5.29'	12.66'	23°56'18"	2.68
EC234	7.12'	4.50'	90°40'44"	4.55
EC235	4.85'	5.99'	46°23'09"	2.57
EC236	2.97'	55.11'	3°04'58"	1.48
EC237	7.47'	3.25'	131°43'44"	7.25
EC238	4.96'	4.68'	60°46'27"	2.74
EC239	2.79'	3.65'	43°54'20"	1.47
EC240	4.12'	5.00'	47°11'15"	2.18

File: C:\PWWORKING\EAST01\D0786396\I7113XXX_(CURB TIE PLANS).DWG Plotted: 4/15/2022 3:03:59 PM

ISSUED FOR BID

HDR ENGINEERING, INC.
99 HIGH STREET, SUITE 2300
BOSTON, MASSACHUSETTS 02110-2378
(617) 357-7700

COMMONWEALTH OF MASSACHUSETTS
PHILIP FUSCO
CIVIL
No. 45868
REGISTERED PROFESSIONAL ENGINEER

Scale			
Date			
Job No.			
Designed by			
Drawn by			
Checked by	No.	Description	Date
Approved by	REVISIONS		

THE WORKS
CAMBRIDGE DEPARTMENT OF PUBLIC WORKS

Client: CITY OF CAMBRIDGE, MA

Project: RIVER STREET
INFRASTRUCTURE AND STREETSCAPE PROJECT

Drawing: **CURB CURVE TABLES**

Sheet: R-2.19

Total Sheets: 381

File No.

RIVER STREET SEPARATED BIKE LANE CONSTRUCTION BASELINE DATA

NUMBER	STARTING STATION	NORTHING	EASTING	CURVE DATA	LINE DATA	ENDING STATION	NORTHING	EASTING
L200	200+00.00	2956892.158	759811.555		N65°19'49"E 424.00'	204+24.00	2957069.132	760196.861
C211	204+24.00	2957069.132	760196.861	R=34.50' Δ=21°06'39" L=12.71' T=6.43'		204+36.72	2957072.214	760209.119
C212	204+36.72	2957072.214	760209.119	R=40.00' Δ=21°06'40" L=14.74' T=7.45'		204+51.45	2957075.788	760223.331
L201	204+51.45	2957075.788	760223.331		N65°19'49"E 41.45'	204+92.91	2957093.090	760261.001
C213	204+92.91	2957093.090	760261.001	R=100.00' Δ=5°42'38" L=9.97' T=4.99'		205+02.87	2957097.694	760269.836
L202	205+02.87	2957097.694	760269.836		N59°37'11"E 10.42'	205+13.30	2957102.966	760278.829
C214	205+13.30	2957102.966	760278.829	R=94.00' Δ=5°42'38" L=9.37' T=4.69'		205+22.67	2957107.294	760287.134
L203	205+22.67	2957107.294	760287.134		N65°19'49"E 60.27'	205+82.94	2957132.451	760341.906
C215	205+82.94	2957132.451	760341.906	R=100.00' Δ=5°42'38" L=9.97' T=4.99'		205+92.91	2957136.153	760351.156
L204	205+92.91	2957136.153	760351.156		N71°02'27"E 10.12'	206+03.03	2957139.442	760360.731
C216	206+03.03	2957139.442	760360.731	R=100.00' Δ=5°42'38" L=9.97' T=4.99'		206+13.00	2957143.145	760369.980
L205	206+13.00	2957143.145	760369.980		N65°19'49"E 27.72'	206+40.72	2957154.716	760395.173
L206	206+40.72	2957154.716	760395.173		N65°19'49"E 50.73'	206+91.45	2957175.891	760441.275
C217	206+91.45	2957175.891	760441.275	R=106.00' Δ=5°42'38" L=10.56' T=5.29'		207+02.02	2957180.771	760450.640
L207	207+02.02	2957180.771	760450.640		N59°37'11"E 10.12'	207+12.14	2957185.891	760459.374
C218	207+12.14	2957185.891	760459.374	R=94.00' Δ=5°42'38" L=9.37' T=4.69'		207+21.51	2957190.219	760467.679
L208	207+21.51	2957190.219	760467.679		N65°19'49"E 89.92'	208+11.43	2957227.750	760549.391
L209	208+11.43	2957227.750	760549.391		N65°19'49"E 4.67'	208+16.10	2957229.698	760553.632
C219	208+16.10	2957229.698	760553.632	R=30.00' Δ=23°01'18" L=12.05' T=6.11'		208+28.15	2957232.424	760565.291
L210	208+28.15	2957232.424	760565.291		N88°21'07"E 12.02'	208+40.17	2957232.770	760577.305
C220	208+40.17	2957232.770	760577.305	R=25.00' Δ=9°27'04" L=4.12' T=2.07'		208+44.30	2957233.227	760581.399
L211	208+44.30	2957233.227	760581.399		N67°49'54"E 4.20'	208+48.50	2957234.812	760585.291
L212	208+48.50	2957234.812	760585.291		N58°21'06"E 51.57'	209+00.07	2957261.871	760629.191
L213	209+00.07	2957261.871	760629.191		N65°10'37"E 18.86'	209+18.93	2957269.791	760646.312
C221	209+18.93	2957269.791	760646.312	R=100.00' Δ=5°42'38" L=9.97' T=4.99'		209+28.90	2957274.395	760655.147
L214	209+28.90	2957274.395	760655.147		N59°37'11"E 10.12'	209+39.02	2957279.515	760663.882
C222	209+39.02	2957279.515	760663.882	R=100.00' Δ=5°42'38" L=9.97' T=4.99'		209+48.99	2957284.120	760672.717
L215	209+48.99	2957284.120	760672.717		N65°19'49"E 84.14'	210+33.13	2957319.239	760749.178
L216	210+33.13	2957319.239	760749.178		N65°19'49"E 17.75'	210+50.88	2957326.648	760765.310
L217	211+17.88	2957354.612	760826.193		N65°19'49"E 56.94'	211+74.82	2957378.378	760877.935
L219	211+75.32	2957378.832	760877.726		N65°19'49"E 33.35'	212+08.67	2957392.753	760908.036
L220	212+08.67	2957392.753	760908.036		N71°02'27"E 25.12'	212+33.80	2957400.916	760931.797
L221	212+33.80	2957400.916	760931.797		N65°19'49"E 11.82'	212+45.62	2957405.849	760942.536
L222	212+45.62	2957405.849	760942.536		N66°38'45"E 21.78'	212+67.39	2957414.482	760962.531
L224	212+67.39	2957414.482	760962.531		N65°19'49"E 1.56'	212+68.95	2957415.133	760963.948
C223	212+68.95	2957415.133	760963.948	R=81.00' Δ=5°42'38" L=8.07' T=4.04'		212+77.03	2957418.862	760971.104
L225	212+77.03	2957418.862	760971.104		N59°37'11"E 7.29'	212+84.32	2957422.551	760977.397
C224	212+84.32	2957422.551	760977.397	R=75.00' Δ=5°42'38" L=7.48' T=3.74'		212+91.80	2957426.004	760984.023
L226	212+91.80	2957426.004	760984.023		N65°19'49"E 133.94'	214+25.73	2957481.908	761105.735

RIVER STREET SEPARATED BIKE LANE CONSTRUCTION BASELINE DATA

NUMBER	STARTING STATION	NORTHING	EASTING	CURVE DATA	LINE DATA	ENDING STATION	NORTHING	EASTING
C225	214+25.73	2957481.908	761105.735	R=75.00' Δ=7°17'46" L=9.55' T=4.78'		214+35.28	2957485.331	761114.644
L227	214+35.28	2957485.331	761114.644		N72°37'35"E 1.90'	214+37.18	2957485.898	761116.455
C226	214+37.18	2957485.898	761116.455	R=80.50' Δ=7°17'46" L=10.25' T=5.13'		214+47.43	2957489.572	761126.017
L228	214+47.43	2957489.572	761126.017		N65°19'49"E 17.39'	214+64.82	2957496.831	761141.821
L229	214+64.82	2957496.831	761141.821		N66°42'54"E 20.69'	214+85.51	2957505.009	761160.823
C227	214+85.51	2957505.009	761160.823	R=106.49' Δ=8°30'07" L=15.80' T=7.92'		215+01.31	2957512.547	761174.695
C228	215+01.31	2957512.547	761174.695	R=94.00' Δ=8°06'35" L=13.30' T=6.66'		215+14.62	2957518.936	761186.353
L230	215+14.62	2957518.936	761186.353		N65°19'50"E 130.82'	216+45.44	2957573.540	761305.237
L231	216+45.44	2957573.540	761305.237		N62°37'47"E 21.23'	216+66.67	2957583.301	761324.092
L232	216+66.67	2957583.301	761324.092		N65°19'49"E 7.38'	216+74.05	2957586.381	761330.798
C229	216+74.05	2957586.381	761330.798	R=100.00' Δ=6°28'02" L=11.29' T=5.65'		216+85.34	2957590.504	761341.299
C230	216+85.34	2957590.504	761341.299	R=104.30' Δ=6°28'02" L=11.77' T=5.89'		216+97.11	2957594.804	761352.251
L233	216+97.11	2957594.804	761352.251		N65°19'49"E 41.02'	217+38.13	2957611.924	761389.524
L236	217+38.13	2957611.924	761389.524		N65°19'50"E 42.15'	217+80.28	2957629.517	761427.828
L234	217+80.28	2957629.517	761427.828		N62°44'16"E 28.74'	218+09.02	2957642.682	761453.375
L235	218+09.02	2957642.682	761453.375		N65°19'49"E 53.41'	218+62.43	2957664.972	761501.906
C234	218+62.43	2957664.972	761501.906	R=75.00' Δ=3°52'21" L=5.07' T=2.54'		218+67.49	2957666.931	761506.581
L239	218+67.49	2957666.931	761506.581		N69°12'10"E 19.67'	218+87.16	2957673.915	761524.969
L240	218+87.16	2957673.915	761524.969		N65°19'50"E 64.27'	219+51.43	2957700.739	761583.371
C235	219+51.43	2957700.739	761583.371	R=75.00' Δ=13°03'45" L=17.10' T=8.59'		219+68.53	2957709.578	761597.965
C236	219+68.53	2957709.578	761597.965	R=75.00' Δ=14°26'32" L=18.90' T=9.50'		219+87.44	2957719.150	761614.209
L241	219+87.44	2957719.150	761614.209		N66°42'36"E 135.73'	221+23.16	2957772.815	761738.877
C237	221+23.16	2957772.815	761738.877	R=317.50' Δ=1°22'46" L=7.64' T=3.82'		221+30.81	2957775.922	761745.861
L218	221+30.81	2957775.922	761745.861		N65°19'49"E 120.53'	222+51.34	2957826.229	761855.389
C238	222+51.34	2957826.229	761855.389	R=65.00' Δ=11°05'10" L=12.58' T=6.31'		222+63.91	2957830.344	761867.253
C239	222+63.91	2957830.344	761867.253	R=71.01' Δ=9°02'40" L=11.21' T=5.62'		222+75.12	2957833.824	761877.897
L237	222+79.95	2957835.840	761882.287		N67°44'58"E 35.70'	223+15.66	2957849.359	761915.331
L238	223+15.66	2957849.359	761915.331		N65°19'49"E 66.91'	223+82.57	2957877.288	761976.136
C240	223+82.57	2957877.288	761976.136	R=100.00' Δ=9°12'30" L=16.07' T=8.05'		223+98.64	2957885.138	761990.140
C241	223+98.64	2957885.138	761990.140	R=94.00' Δ=9°12'30" L=15.11' T=7.57'		224+13.75	2957892.517	762003.304
L242	224+13.75	2957892.517	762003.304		N65°19'49"E 33.70'	224+47.45	2957906.584	762033.931
L248	224+47.45	2957906.584	762033.931		N65°19'49"E 20.31'	224+67.76	2957915.060	762052.383
L249	224+67.76	2957915.060	762052.383		N65°19'49"E 39.16'	225+06.92	2957931.404	762087.969
L250	225+06.92	2957931.404	762087.969		N65°19'49"E 192.00'	226+98.91	2958011.541	762262.442
L251	226+98.91	2958011.541	762262.442		N66°40'54"E 21.20'	227+20.11	2958019.933	762281.911
L252	227+20.11	2958019.933	762281.911		N65°19'50"E 2.38'	227+22.50	2958020.928	762284.078
C242	227+22.50	2958020.928	762284.078	R=106.00' Δ=8°06'35" L=15.00' T=7.51'		227+37.50	2958028.133	762297.224
C243	227+37.50	2958028.133	762297.224	R=94.00' Δ=8°06'35" L=13.30' T=6.66'		227+50.81	2958034.522	762308.882
L253	227+50.81	2958034.522	762308.882		N65°19'49"E 121.09'	228+71.89	2958085.062	762418.917

File: C:\PWWORKING\EAST01\D0786396\I7113XXX_(CURB TIE PLANS).DWG Plotted: 4/15/2022 3:04:08 PM

ISSUED FOR BID

HDR ENGINEERING, INC.
99 HIGH STREET, SUITE 2300
BOSTON, MASSACHUSETTS 02110-2378
(617) 357-7700

COMMONWEALTH OF MASSACHUSETTS
PHILIP FUSCO
CIVIL
No. 45868
REGISTERED PROFESSIONAL ENGINEER

Scale			
Date			
Job No.			
Designed by			
Drawn by			
Checked by	No.	Description	Date
Approved by	REVISIONS		

THE CAMBRIDGE DEPARTMENT OF PUBLIC WORKS

Client: CITY OF CAMBRIDGE, MA

Project: RIVER STREET
INFRASTRUCTURE AND STREETSCAPE PROJECT

Drawing: **SEPARATED BIKE LANE ALIGNMENT TABLES - 1**

Sheet: R-2.20

Total Sheets: 381

File No.

RIVER STREET SEPARATED BIKE LANE CONSTRUCTION BASELINE DATA

NUMBER	STARTING STATION	NORTHING	EASTING	CURVE DATA	LINE DATA	ENDING STATION	NORTHING	EASTING
C244	228+71.89	2958085.062	762418.917	R=100.00' Δ=7°59'26" L=13.95' T=6.98'		228+85.84	2958089.982	762431.954
C245	228+85.84	2958089.982	762431.954	R=106.00' Δ=7°59'26" L=14.78' T=7.40'		229+00.62	2958095.196	762445.774
L254	229+00.62	2958095.196	762445.774		N65°19'49"E 33.88'	229+34.50	2958109.337	762476.561
L255	229+34.50	2958109.337	762476.561		N65°19'49"E 19.74'	229+54.24	2958117.575	762494.496
L256	229+54.24	2958117.575	762494.496		N65°19'50"E 4.47'	229+58.71	2958119.442	762498.561
C246	229+58.71	2958119.442	762498.561	R=106.00' Δ=8°06'35" L=15.00' T=7.51'		229+73.71	2958126.646	762511.707
C247	229+73.71	2958126.646	762511.707	R=94.00' Δ=8°06'35" L=13.30' T=6.66'		229+87.02	2958133.035	762523.365
L257	229+87.02	2958133.035	762523.365		N65°19'49"E 202.97'	231+89.99	2958217.751	762707.807
L258	231+89.99	2958217.751	762707.807		N65°57'16"E 29.68'	232+19.67	2958229.845	762734.911
L259	232+19.67	2958229.845	762734.911		N58°58'03"E 3.79'	232+23.45	2958231.797	762738.156
L260	232+23.45	2958231.797	762738.156		N58°58'03"E 2.04'	232+25.49	2958232.846	762739.900
L261	232+25.49	2958232.846	762739.900		N58°13'07"E 38.44'	232+63.93	2958253.091	762772.575
C248	232+63.93	2958253.091	762772.575	R=143.50' Δ=5°29'23" L=13.75' T=6.88'		232+77.68	2958259.762	762784.592
C249	232+77.68	2958259.762	762784.592	R=691.00' Δ=5°05'58" L=61.50' T=30.77'		233+39.18	2958284.514	762840.867
L263	233+49.20	2958288.138	762850.212		N66°43'52"E 27.65'	233+76.84	2958299.059	762875.609
C250	233+76.84	2958299.059	762875.609	R=55.50' Δ=16°17'38" L=15.78' T=7.95'		233+92.63	2958306.765	762889.322
C251	233+92.63	2958306.765	762889.322	R=94.50' Δ=27°24'32" L=45.21' T=23.04'		234+37.83	2958324.819	762930.298
L264	234+37.83	2958324.819	762930.298		N79°55'37"E 22.57'	234+60.40	2958328.766	762952.515
L265	234+60.40	2958328.766	762952.515		N89°04'28"E 35.25'	234+95.65	2958329.335	762987.758
C252	234+95.65	2958329.335	762987.758	R=68.50' Δ=7°48'49" L=9.34' T=4.68'		235+04.99	2958329.132	762997.090
L266	235+04.99	2958329.132	762997.090		S84°50'47"E 35.74'	235+40.73	2958325.921	763032.689
C253	235+40.73	2958325.921	763032.689	R=75.25' Δ=56°29'57" L=74.20' T=40.43'		236+14.93	2958353.864	763098.213
L267	236+14.93	2958353.864	763098.213		N38°39'17"E 19.38'	236+34.32	2958369.000	763110.320
C254	236+34.32	2958369.000	763110.320	R=196.75' Δ=9°16'27" L=31.85' T=15.96'		236+66.16	2958392.155	763132.134
L268	236+66.16	2958392.155	763132.134		N47°55'44"E 6.48'	236+72.65	2958396.498	763136.946
L269	236+72.65	2958396.498	763136.946		N47°55'44"E 105.92'	237+78.56	2958467.468	763215.569

WESTERN AVE SEPARATED BIKE LANE CONSTRUCTION BASELINE DATA

NUMBER	STARTING STATION	NORTHING	EASTING	CURVE DATA	LINE DATA	ENDING STATION	NORTHING	EASTING
L300	300+00.00	2958379.639	762910.337		N77°26'23"E 17.92'	300+17.92	2958383.535	762927.825
C300	300+17.92	2958383.535	762927.825	R=1014.00' Δ=1°42'11" L=30.14' T=15.07'		300+48.06	2958389.652	762957.336
C301	300+48.06	2958389.652	762957.336	R=400.00' Δ=5°46'36" L=40.33' T=20.18'		300+88.39	2958395.240	762997.259
C302	300+88.39	2958395.240	762997.259	R=168.50' Δ=30°51'27" L=90.75' T=46.50'		301+79.13	2958426.652	763081.231
C303	301+79.13	2958426.652	763081.231	R=168.50' Δ=3°52'13" L=11.38' T=5.69'		301+90.52	2958433.639	763090.214
C304	301+90.52	2958433.639	763090.214	R=81.50' Δ=12°50'50" L=18.27' T=9.18'		302+08.79	2958446.808	763102.829
L301	302+08.79	2958446.808	763102.829		N37°20'40"E 86.48'	302+95.27	2958515.559	763155.288

File: C:\PWWORKINGIEAST01\D0786396\7113XXX_(CURB TIE PLANS).DWG Plotted: 4/15/2022 3:04:17 PM

ISSUED FOR BID

HDR ENGINEERING, INC.
99 HIGH STREET, SUITE 2300
BOSTON, MASSACHUSETTS 02110-2378
(617) 357-7700

COMMONWEALTH OF MASSACHUSETTS
PHILIP FUSCO CIVIL No. 45868
REGISTERED PROFESSIONAL ENGINEER

Scale			
Date			
Job No.			
Designed by			
Drawn by			
Checked by	No.	Description	Date
Approved by	REVISIONS		

THE WORKS — CAMBRIDGE DEPARTMENT OF PUBLIC

Client: CITY OF CAMBRIDGE, MA

Project: RIVER STREET
INFRASTRUCTURE AND STREETSCAPE PROJECT

Drawing: **SEPARATED BIKE LANE ALIGNMENT TABLES - 2**

Sheet: R-2.21

Total Sheets: 381

File No.

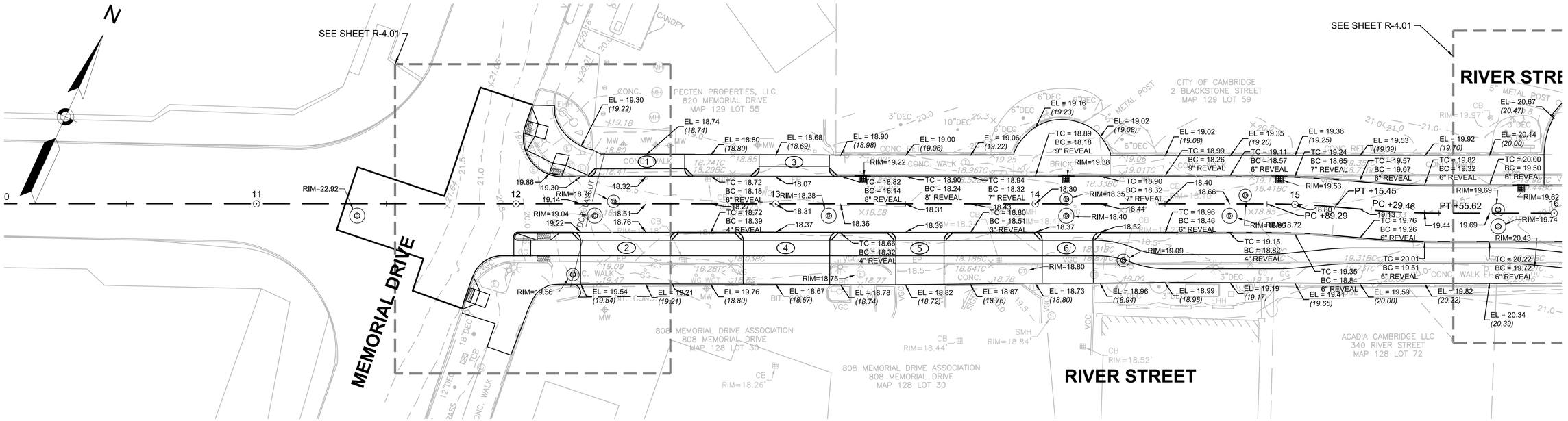

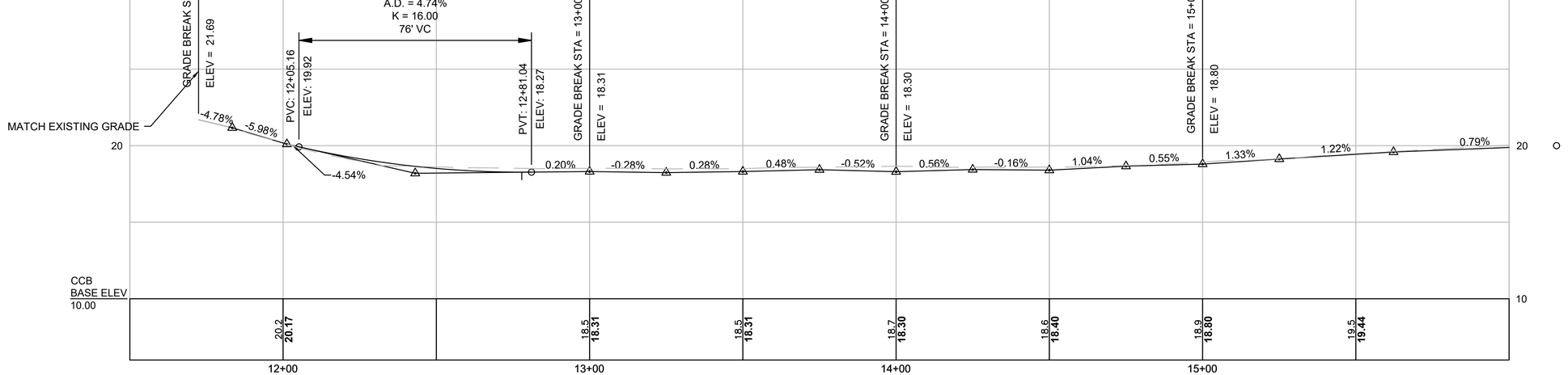

PLAN AND PROFILE - RIVER STREET

HOR. SCALE IN FEET
20 0 20 40
VER. SCALE IN FEET
5 0 5 10

LEGEND

TC=20.64 BC=20.64 0" REVEAL	PROPOSED TOP OF CURB ELEVATION PROPOSED BOTTOM OF CURB ELEVATION CURB REVEAL
EL=20.64 *(20.64)*	PROPOSED ELEVATION AND EXISTING ELEVATION
EL=20.64	PROPOSED ELEVATION ONLY

ISSUED FOR BID

HDR ENGINEERING, INC.
99 HIGH STREET, SUITE 2300
BOSTON, MASSACHUSETTS 02110-2378
(617) 357-7700

COMMONWEALTH OF MASSACHUSETTS
PHILIP FUSCO
CIVIL
No. 45868
REGISTERED PROFESSIONAL ENGINEER

Scale			
Date			
Job No.			
Designed by			
Drawn by			
Checked by	No.	Description	Date
Approved by	REVISIONS		

CAMBRIDGE DEPARTMENT OF PUBLIC WORKS

Client	CITY OF CAMBRIDGE, MA	Sheet	R-3.01
Project	RIVER STREET INFRASTRUCTURE AND STREETSCAPE PROJECT	Total Sheets	381
Drawing	**ROADWAY GRADING PLAN AND PROFILE - 1**	File No.	

File: C:\PW\WORKING\EAST01\D0786396\7113XXX_(PROFILES).DWG Plotted: 5/2/2022 7:00:25 PM

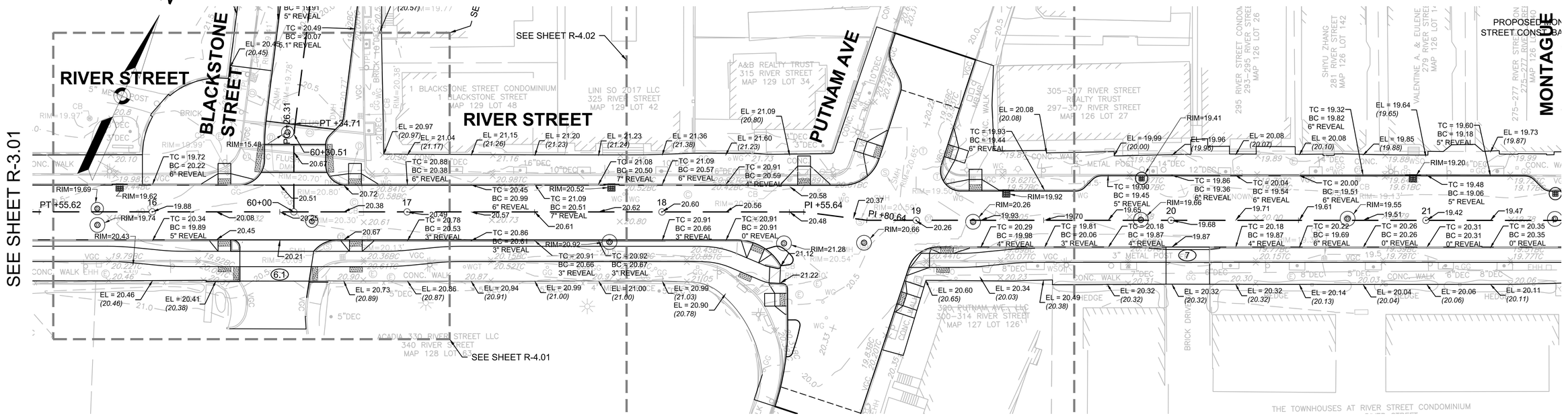

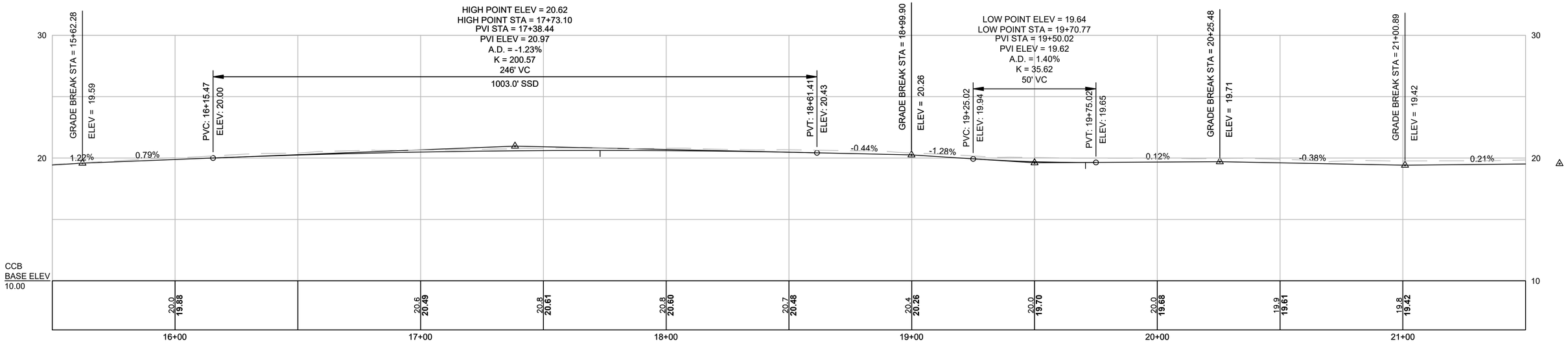

PLAN AND PROFILE - RIVER STREET

HOR. SCALE IN FEET
20 0 20 40
VER. SCALE IN FEET
5 0 5 10

LEGEND

TC=20.64 BC=20.64 0" REVEAL	PROPOSED TOP OF CURB ELEVATION PROPOSED BOTTOM OF CURB ELEVATION CURB REVEAL
EL=20.64 *(20.64)*	PROPOSED ELEVATION AND EXISTING ELEVATION
EL=20.64	PROPOSED ELEVATION ONLY

ISSUED FOR BID

HDR ENGINEERING, INC.
99 HIGH STREET, SUITE 2300
BOSTON, MASSACHUSETTS 02110-2378
(617) 357-7700

PHILIP FUSCO CIVIL No. 45868 REGISTERED PROFESSIONAL ENGINEER
COMMONWEALTH OF MASSACHUSETTS

Scale			
Date			
Job No.			
Designed by			
Drawn by			
Checked by	No.	Description	Date
Approved by	REVISIONS		

THE WORKS — CAMBRIDGE DEPARTMENT OF PUBLIC

Client: CITY OF CAMBRIDGE, MA
Project: RIVER STREET INFRASTRUCTURE AND STREETSCAPE PROJECT
Drawing: **ROADWAY GRADING PLAN AND PROFILE - 2**
Sheet: R-3.02
Total Sheets: 381
File No.

File: C:\PW\WORKING\EAST01\D0786396\7113XXX_(PROFILES).DWG Plotted: 5/2/2022 7:00:44 PM

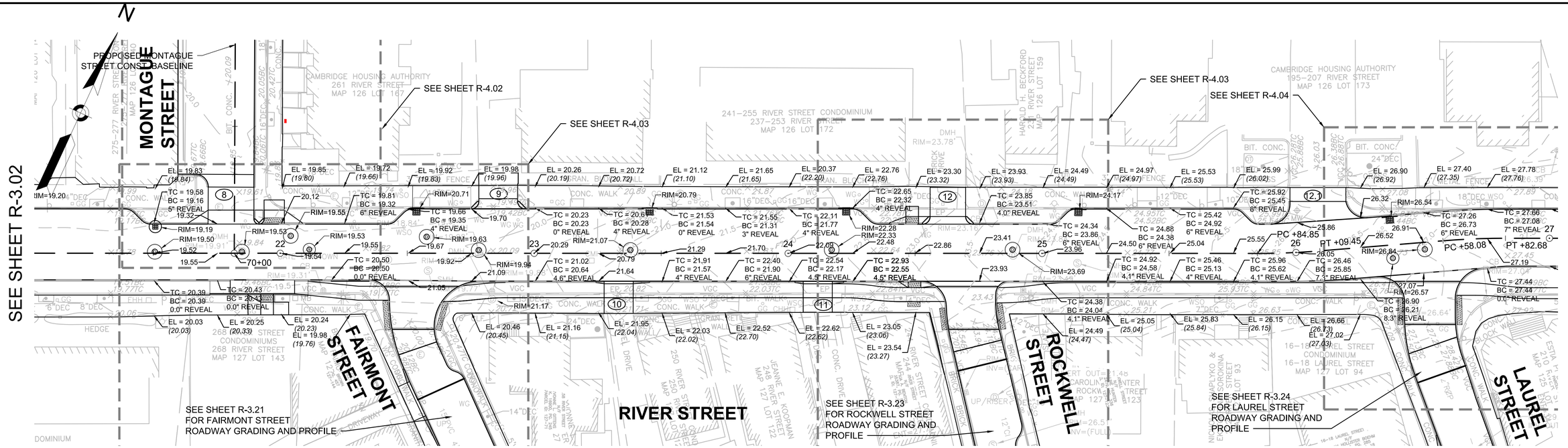

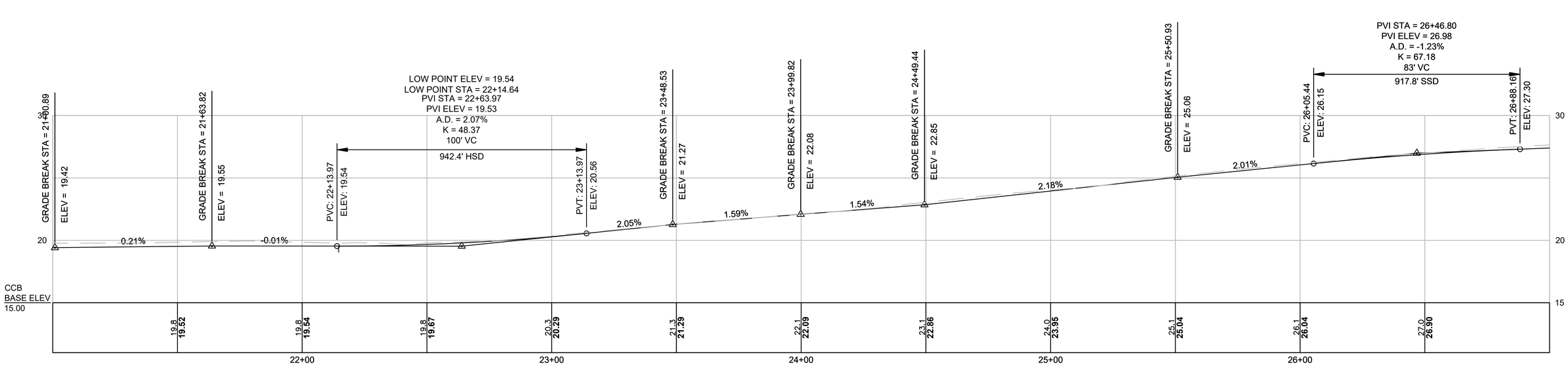

PLAN AND PROFILE - RIVER STREET

HOR. SCALE IN FEET
20 0 20 40
5 0 5 10
VER. SCALE IN FEET

LEGEND

TC=20.64 BC=20.64 0" REVEAL	PROPOSED TOP OF CURB ELEVATION PROPOSED BOTTOM OF CURB ELEVATION CURB REVEAL
EL=20.64 *(20.64)*	PROPOSED ELEVATION AND EXISTING ELEVATION
EL=20.64	PROPOSED ELEVATION ONLY

ISSUED FOR BID

HDR ENGINEERING, INC.
99 HIGH STREET, SUITE 2300
BOSTON, MASSACHUSETTS 02110–2378
(617) 357–7700

COMMONWEALTH OF MASSACHUSETTS
PHILIP FUSCO
CIVIL
No. 45868
REGISTERED PROFESSIONAL ENGINEER

Scale			
Date			
Job No.			
Designed by			
Drawn by			
Checked by	No.	Description	Date
Approved by	REVISIONS		

CAMBRIDGE DEPARTMENT OF PUBLIC WORKS

Client	CITY OF CAMBRIDGE, MA	Sheet	R-3.03
Project	RIVER STREET INFRASTRUCTURE AND STREETSCAPE PROJECT	Total Sheets	381
Drawing	**ROADWAY GRADING PLAN AND PROFILE - 3**	File No.	

File: C:\PW\WORKING\EAST01\D0786396\7113XXX_(PROFILES).DWG Plotted: 5/2/2022 7:00:53 PM

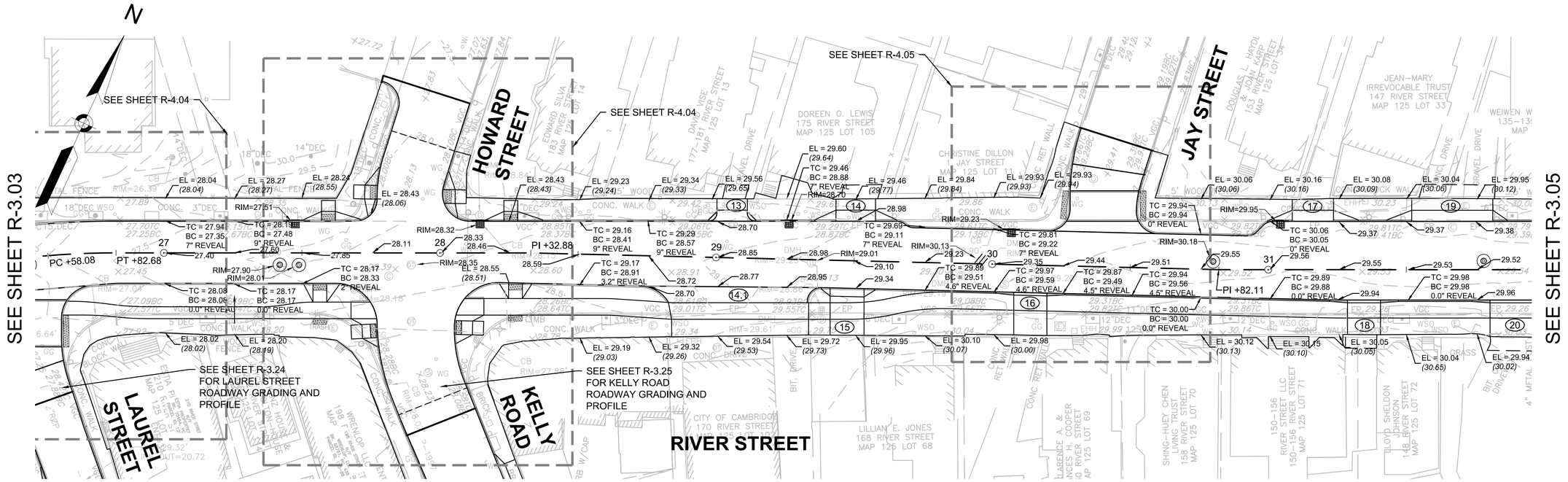

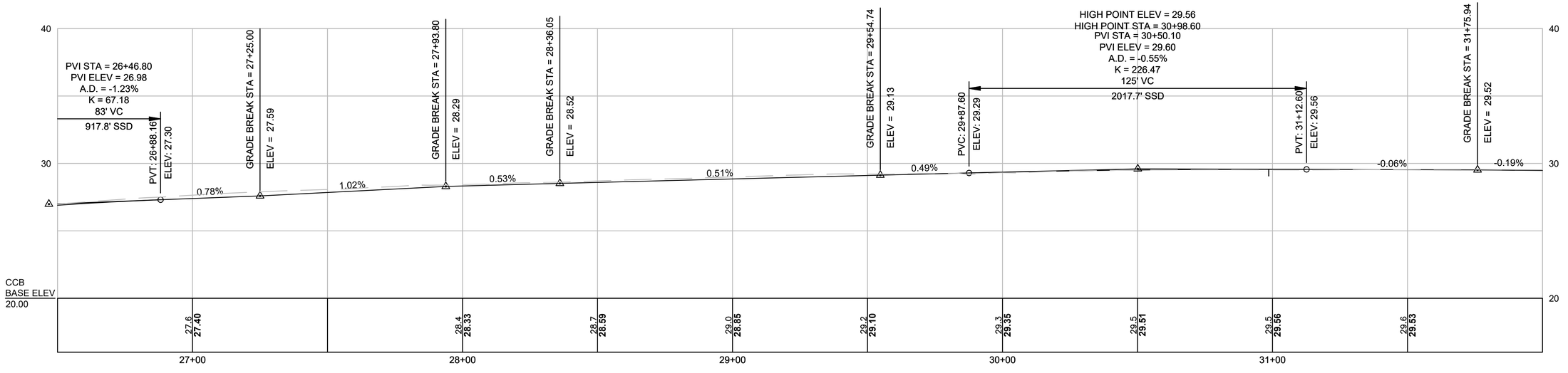

PLAN AND PROFILE - RIVER STREET

HOR. SCALE IN FEET
20 0 20 40
5 0 5 10
VER. SCALE IN FEET

LEGEND

TC=20.64 BC=20.64 0" REVEAL	PROPOSED TOP OF CURB ELEVATION PROPOSED BOTTOM OF CURB ELEVATION CURB REVEAL
EL=20.64 *(20.64)*	PROPOSED ELEVATION AND EXISTING ELEVATION
EL=20.64	PROPOSED ELEVATION ONLY

ISSUED FOR BID

HDR ENGINEERING, INC.
99 HIGH STREET, SUITE 2300
BOSTON, MASSACHUSETTS 02110-2378
(617) 357-7700

COMMONWEALTH OF MASSACHUSETTS
PHILIP FUSCO
CIVIL
No. 45868
REGISTERED PROFESSIONAL ENGINEER

Scale			
Date			
Job No.			
Designed by			
Drawn by			
Checked by	No.	Description	Date
Approved by	REVISIONS		

THE WORKS — CAMBRIDGE DEPARTMENT OF PUBLIC

Client: CITY OF CAMBRIDGE, MA	Sheet: R-3.04
Project: RIVER STREET INFRASTRUCTURE AND STREETSCAPE PROJECT	Total Sheets: 381
Drawing: **ROADWAY GRADING PLAN AND PROFILE - 4**	File No.

File: C:\PWWORKING\EAST01\D07863961\7113XXX_(PROFILES).DWG Plotted: 5/2/2022 7:01:08 PM

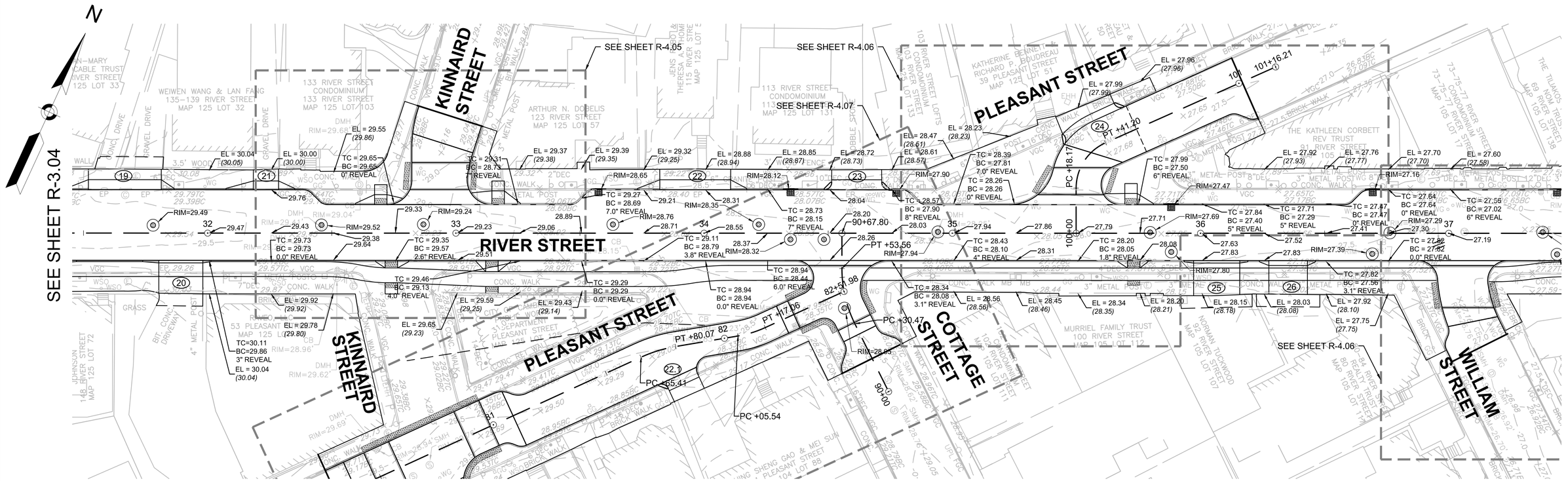

PLAN AND PROFILE - RIVER STREET

HOR. SCALE IN FEET
20 0 20 40
5 0 5 10
VER. SCALE IN FEET

LEGEND

TC=20.64 BC=20.64 0" REVEAL	PROPOSED TOP OF CURB ELEVATION PROPOSED BOTTOM OF CURB ELEVATION CURB REVEAL
EL=20.64 *(20.64)*	PROPOSED ELEVATION AND EXISTING ELEVATION
EL=20.64	PROPOSED ELEVATION ONLY

ISSUED FOR BID

HDR ENGINEERING, INC.
99 HIGH STREET, SUITE 2300
BOSTON, MASSACHUSETTS 02110-2378
(617) 357-7700

COMMONWEALTH OF MASSACHUSETTS
PHILIP FUSCO
CIVIL
No. 45868
REGISTERED PROFESSIONAL ENGINEER

Scale			
Date			
Job No.			
Designed by			
Drawn by			
Checked by	No.	Description	Date
Approved by	REVISIONS		

CAMBRIDGE DEPARTMENT OF PUBLIC WORKS

Client: CITY OF CAMBRIDGE, MA	Sheet: R-3.05
Project: RIVER STREET INFRASTRUCTURE AND STREETSCAPE PROJECT	Total Sheets: 381
Drawing: **ROADWAY GRADING PLAN AND PROFILE - 5**	File No.

File: C:\PWWORKINGIEAST01\D07863961\7113XXX_(PROFILES).DWG Plotted: 5/2/2022 7:01:23 PM

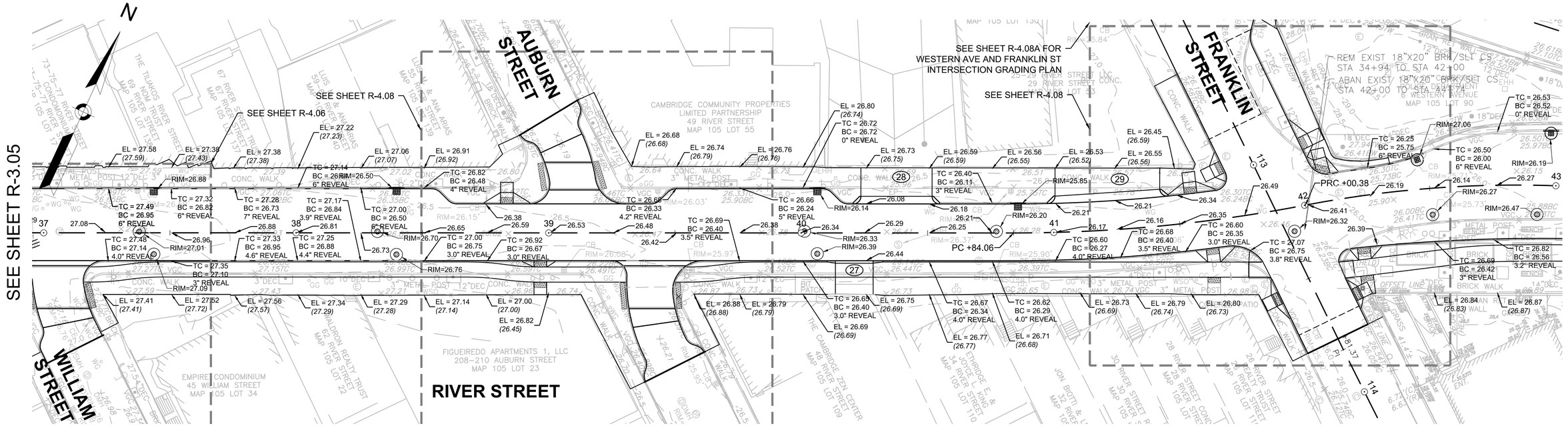

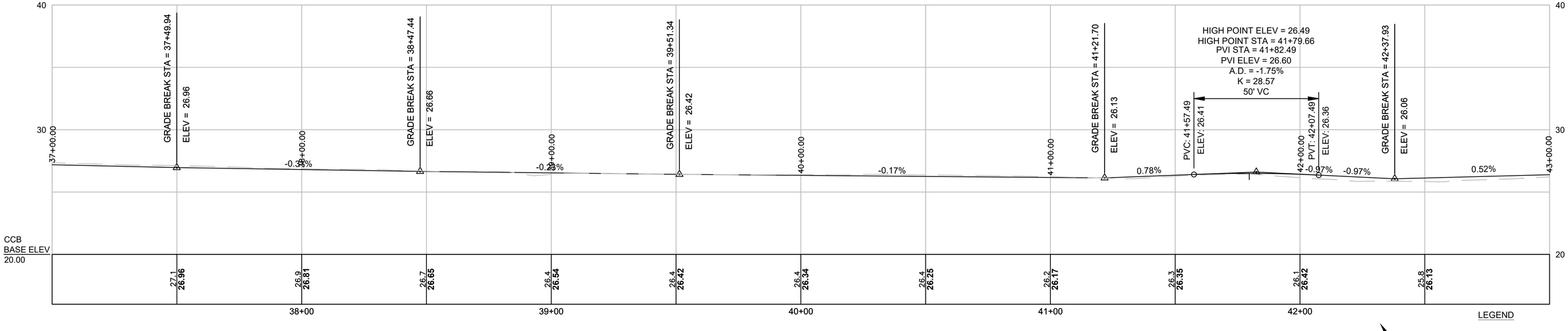

LEGEND

TC=20.64 BC=20.64 0" REVEAL	PROPOSED TOP OF CURB ELEVATION PROPOSED BOTTOM OF CURB ELEVATION CURB REVEAL
EL=20.64 *(20.64)*	PROPOSED ELEVATION AND EXISTING ELEVATION
EL=20.64	PROPOSED ELEVATION ONLY

PLAN AND PROFILE - RIVER STREET

HOR. SCALE IN FEET
20 0 20 40
VER. SCALE IN FEET
5 0 5 10

ISSUED FOR BID

HDR ENGINEERING, INC.
99 HIGH STREET, SUITE 2300
BOSTON, MASSACHUSETTS 02110–2378
(617) 357–7700

COMMONWEALTH OF MASSACHUSETTS
PHILIP FUSCO
CIVIL
No. 45868
REGISTERED PROFESSIONAL ENGINEER

Scale			
Date			
Job No.			
Designed by			
Drawn by			
Checked by	No.	Description	Date
Approved by	REVISIONS		

THE CAMBRIDGE DEPARTMENT OF PUBLIC WORKS

Client: CITY OF CAMBRIDGE, MA	Sheet: R-3.06
Project: RIVER STREET INFRASTRUCTURE AND STREETSCAPE PROJECT	Total Sheets: 381
Drawing: **ROADWAY GRADING PLAN AND PROFILE - 6**	File No.

File: C:\PWWORKING\EAST01\D0786396\7113XXX_(PROFILES).DWG Plotted: 5/2/2022 7:01:33 PM

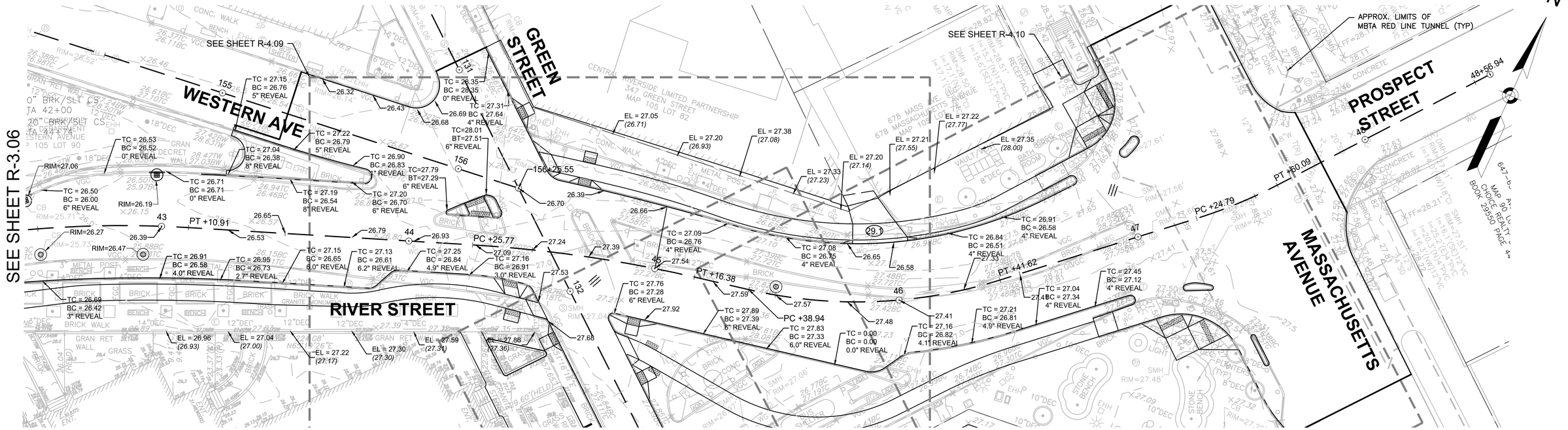

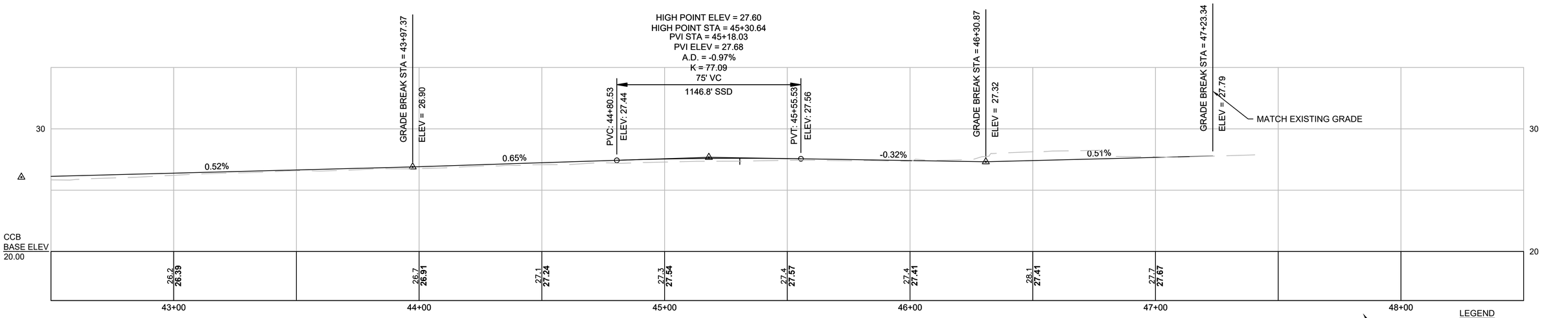

PLAN AND PROFILE - RIVER STREET

HOR. SCALE IN FEET
20 0 20 40
5 0 5 10
VER. SCALE IN FEET

LEGEND

TC=20.64 BC=20.64 0" REVEAL	PROPOSED TOP OF CURB ELEVATION PROPOSED BOTTOM OF CURB ELEVATION CURB REVEAL
EL=20.64 *(20.64)*	PROPOSED ELEVATION AND EXISTING ELEVATION
EL=20.64	PROPOSED ELEVATION ONLY

ISSUED FOR BID

HDR ENGINEERING, INC.
99 HIGH STREET, SUITE 2300
BOSTON, MASSACHUSETTS 02110-2378
(617) 357-7700

COMMONWEALTH OF MASSACHUSETTS
PHILIP FUSCO
CIVIL
No. 45868
REGISTERED PROFESSIONAL ENGINEER

Scale			
Date			
Job No.			
Designed by			
Drawn by			
Checked by	No.	Description	Date
Approved by	REVISIONS		

THE WORKS — CAMBRIDGE DEPARTMENT OF PUBLIC WORKS

Client: CITY OF CAMBRIDGE, MA	Sheet: R-3.07
Project: RIVER STREET INFRASTRUCTURE AND STREETSCAPE PROJECT	Total Sheets: 381
Drawing: **ROADWAY GRADING PLAN AND PROFILE - 7**	File No.

File: C:\PW\WORKING\EAST01\D0786396\7113XXX_(PROFILES).DWG Plotted: 5/2/2022 7:01:49 PM

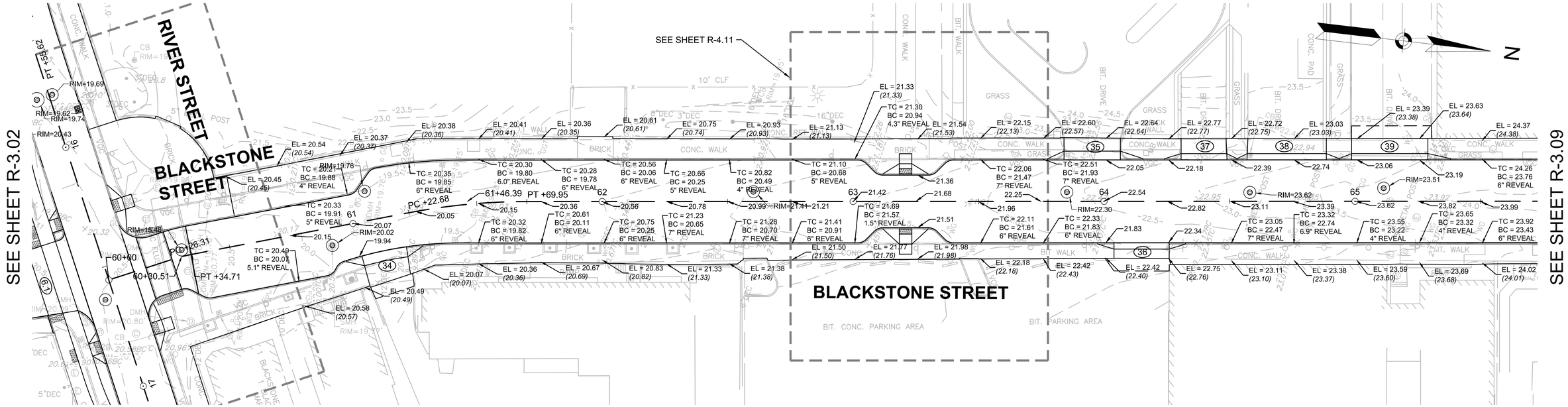

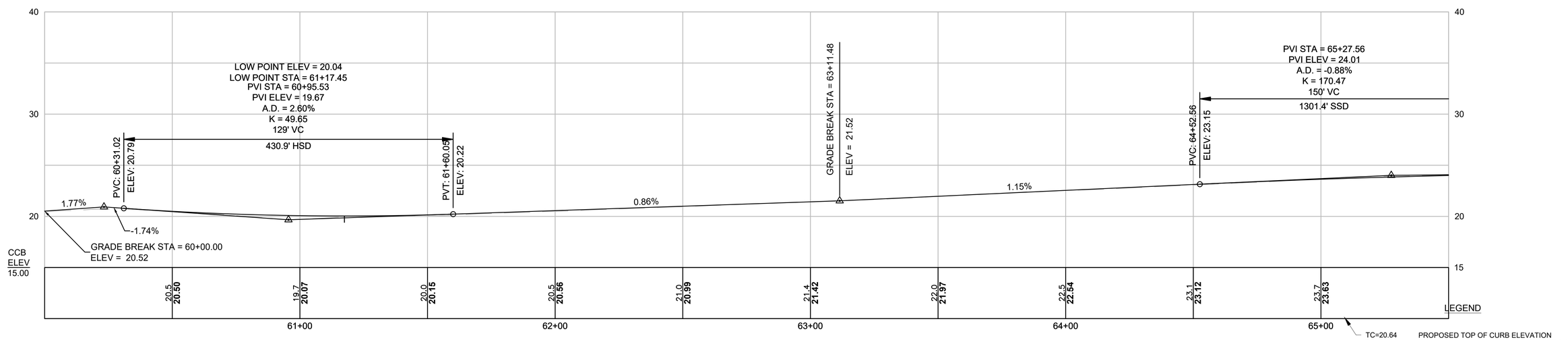

PLAN AND PROFILE - BLACKSTONE STREET

HOR. SCALE IN FEET
20 0 20 40

VER. SCALE IN FEET
5 0 5 10

ISSUED FOR BID

HDR ENGINEERING, INC.
99 HIGH STREET, SUITE 2300
BOSTON, MASSACHUSETTS 02110-2378
(617) 357-7700

COMMONWEALTH OF MASSACHUSETTS
PHILIP FUSCO
CIVIL
No. 45868
REGISTERED PROFESSIONAL ENGINEER

Scale			
Date			
Job No.			
Designed by			
Drawn by			
Checked by	No.	Description	Date
Approved by	REVISIONS		

THE WORKS
CAMBRIDGE DEPARTMENT OF PUBLIC WORKS

Client: CITY OF CAMBRIDGE, MA
Project: RIVER STREET INFRASTRUCTURE AND STREETSCAPE PROJECT
Drawing: **ROADWAY GRADING PLAN AND PROFILE - 8**
Sheet: R-3.08
Total Sheets: 381
File No.

File: C:\PWWORKING\EAST01\D07863961\7113XXX_(PROFILES).DWG Plotted: 5/2/2022 7:02:00 PM

SEE SHEET R-3.08

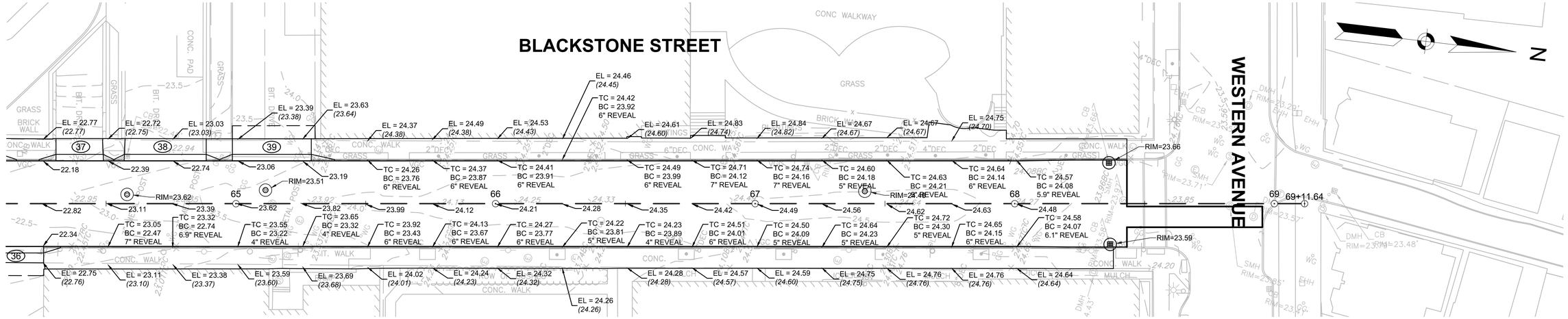

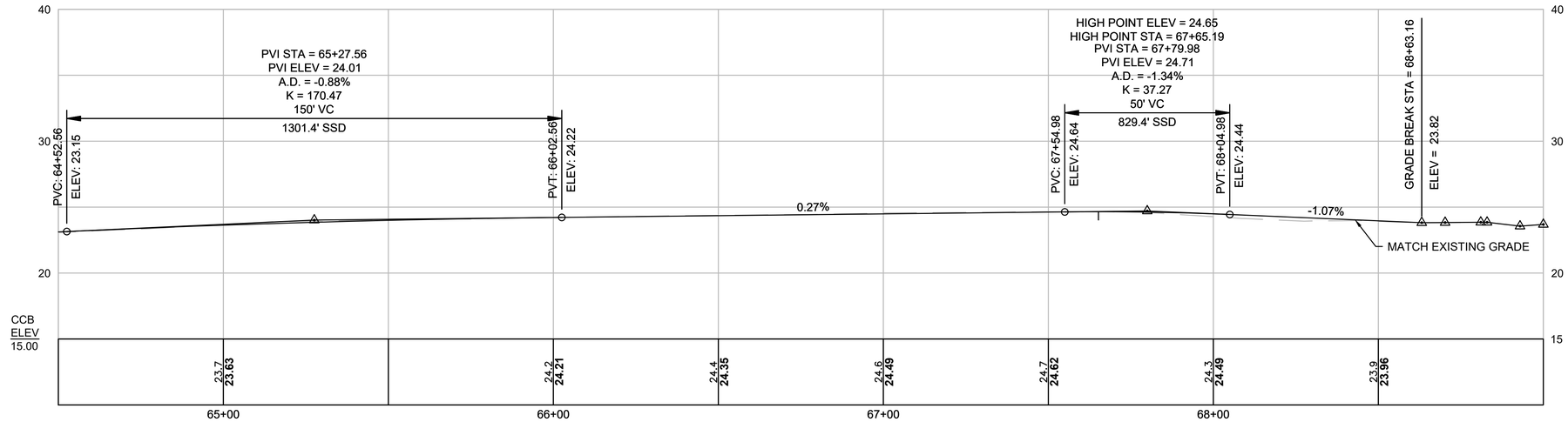

LEGEND

TC=20.64 BC=20.64 0" REVEAL	PROPOSED TOP OF CURB ELEVATION PROPOSED BOTTOM OF CURB ELEVATION CURB REVEAL
EL=20.64 *(20.64)*	PROPOSED ELEVATION AND EXISTING ELEVATION
EL=20.64	PROPOSED ELEVATION ONLY

PLAN AND PROFILE - BLACKSTONE STREET

HOR. SCALE IN FEET
20 0 20 40
VER. SCALE IN FEET
5 0 5 10

ISSUED FOR BID

HDR ENGINEERING, INC.
99 HIGH STREET, SUITE 2300
BOSTON, MASSACHUSETTS 02110–2378
(617) 357–7700

COMMONWEALTH OF MASSACHUSETTS
PHILIP FUSCO
CIVIL
No. 45868
REGISTERED PROFESSIONAL ENGINEER

Scale			
Date			
Job No.			
Designed by			
Drawn by			
Checked by	No.	Description	Date
Approved by	REVISIONS		

THE WORKS — CAMBRIDGE DEPARTMENT OF PUBLIC WORKS

Client: CITY OF CAMBRIDGE, MA	Sheet: R-3.09
Project: RIVER STREET INFRASTRUCTURE AND STREETSCAPE PROJECT	Total Sheets: 381
Drawing: **ROADWAY GRADING PLAN AND PROFILE - 9**	File No.

File: C:\PWWORKING\EAST\011D0786396\7113XXX_(PROFILES).DWG Plotted: 5/2/2022 7:02:14 PM

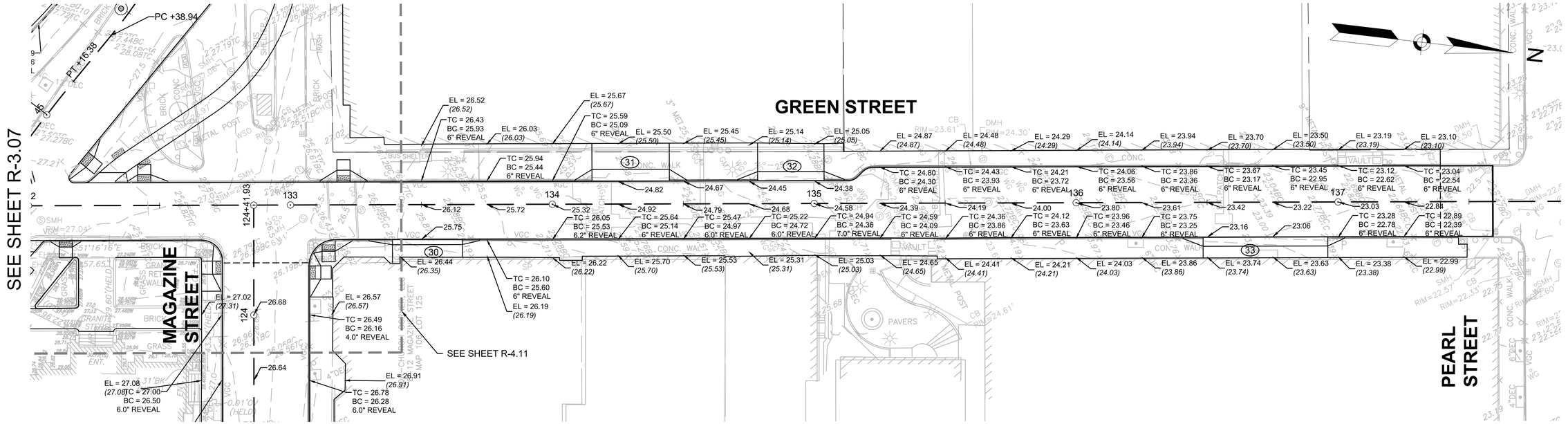

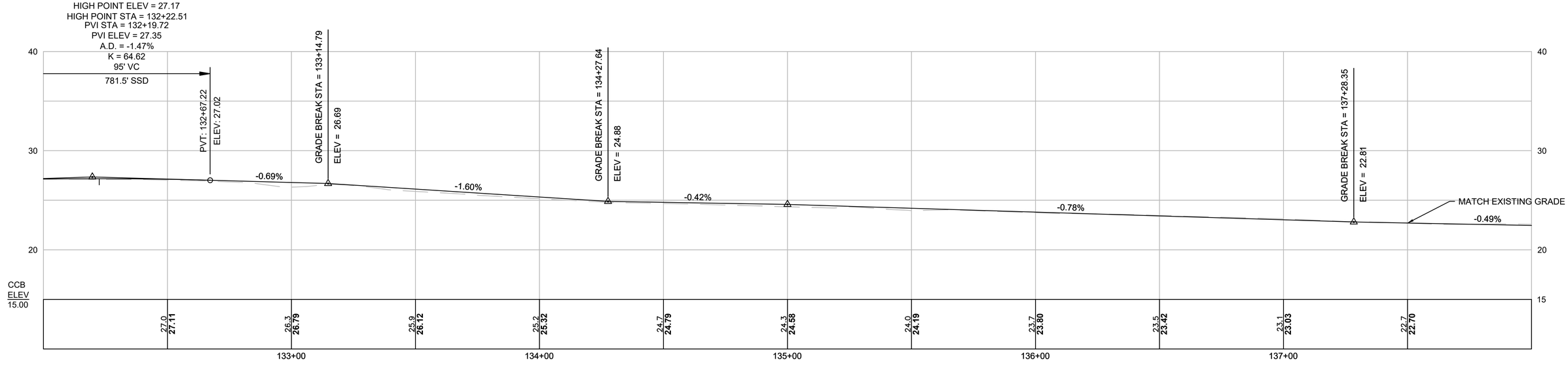

PLAN AND PROFILE - GREEN STREET

HOR. SCALE IN FEET
20 0 20 40
5 0 5 10
VER. SCALE IN FEET

LEGEND

TC=20.64 BC=20.64 0" REVEAL	PROPOSED TOP OF CURB ELEVATION PROPOSED BOTTOM OF CURB ELEVATION CURB REVEAL
EL=20.64 *(20.64)*	PROPOSED ELEVATION AND EXISTING ELEVATION
EL=20.64	PROPOSED ELEVATION ONLY

ISSUED FOR BID

HDR ENGINEERING, INC.
99 HIGH STREET, SUITE 2300
BOSTON, MASSACHUSETTS 02110-2378
(617) 357-7700

PHILIP FUSCO CIVIL No. 45868 COMMONWEALTH OF MASSACHUSETTS REGISTERED PROFESSIONAL ENGINEER

Scale			
Date			
Job No.			
Designed by			
Drawn by			
Checked by	No.	Description	Date
Approved by	REVISIONS		

CAMBRIDGE DEPARTMENT OF PUBLIC WORKS

Client	CITY OF CAMBRIDGE, MA	Sheet	R-3.10
Project	RIVER STREET INFRASTRUCTURE AND STREETSCAPE PROJECT	Total Sheets	381
Drawing	**ROADWAY GRADING PLAN AND PROFILE - 10**	File No.	

File: C:\PW\WORKING\EAST01\D0786396\7113XXX_(PROFILES).DWG Plotted: 5/2/2022 7:02:34 PM

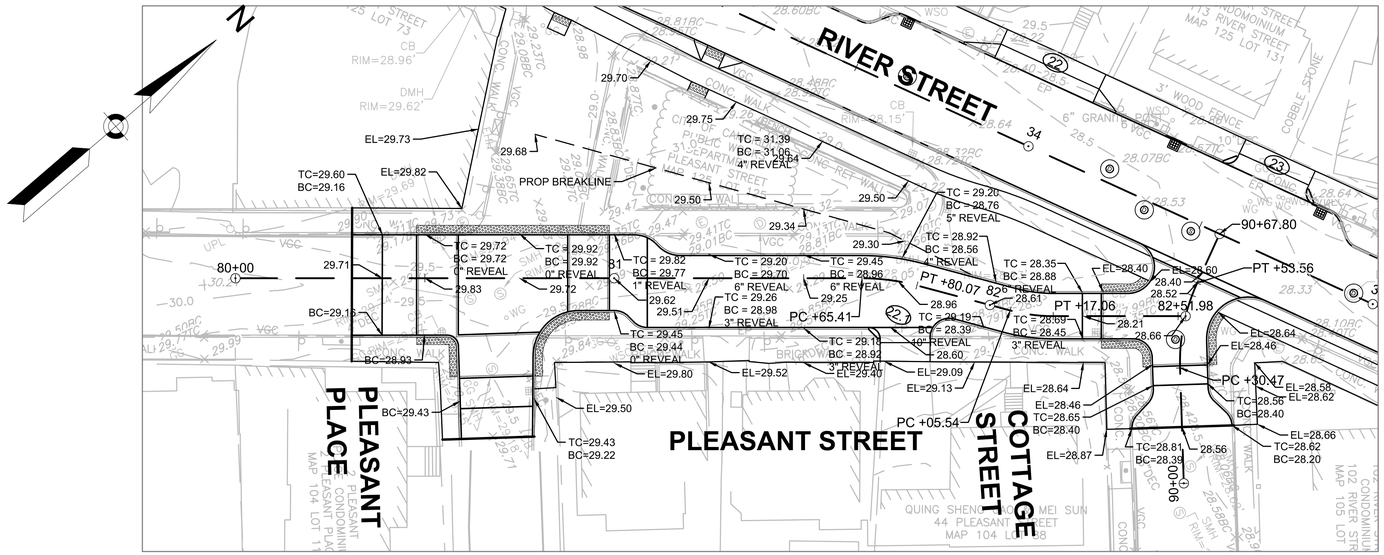

PLAN

0 20 50 100

SCALE: 1" = 20'

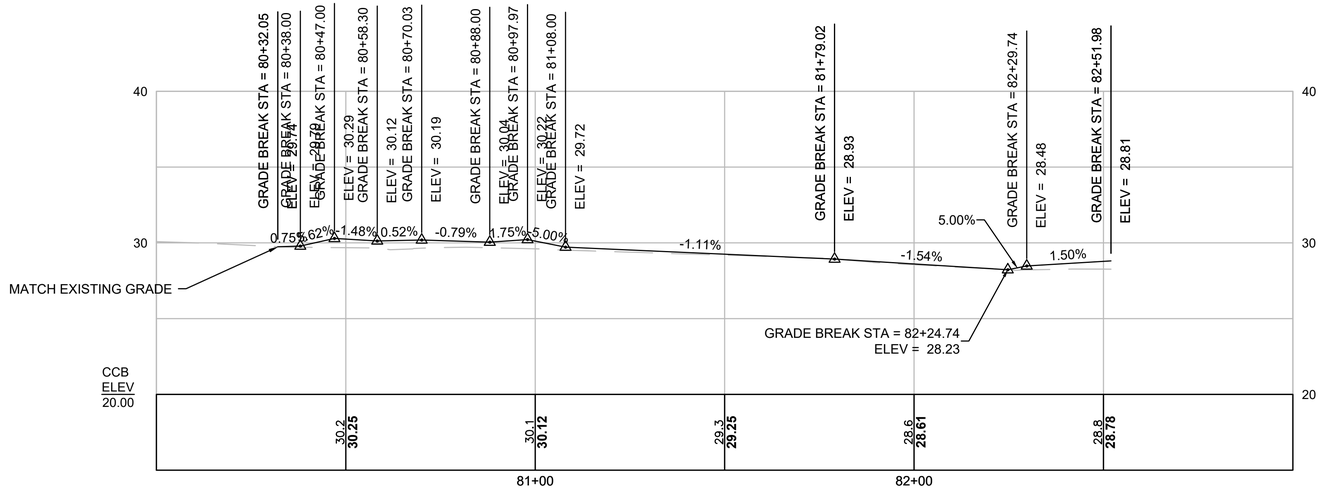

PROFILE - PLEASANT STREET SOUTH

HOR. SCALE IN FEET
20 0 20 40
5 0 5 10
VER. SCALE IN FEET

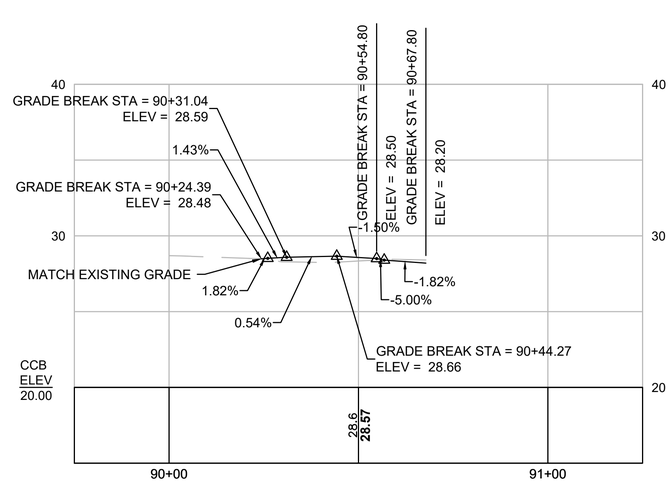

PROFILE - COTTAGE STREET

HOR. SCALE IN FEET
20 0 20 40
5 0 5 10
VER. SCALE IN FEET

LEGEND

TC=20.64 BC=20.64 0" REVEAL	PROPOSED TOP OF CURB ELEVATION PROPOSED BOTTOM OF CURB ELEVATION CURB REVEAL
EL=20.64 *(20.64)*	PROPOSED ELEVATION AND EXISTING ELEVATION
EL=20.64	PROPOSED ELEVATION ONLY

ISSUED FOR BID

HDR ENGINEERING, INC.
99 HIGH STREET, SUITE 2300
BOSTON, MASSACHUSETTS 02110-2378
(617) 357-7700

COMMONWEALTH OF MASSACHUSETTS
PHILIP FUSCO
CIVIL
No. 45868
REGISTERED PROFESSIONAL ENGINEER

Scale			
Date			
Job No.			
Designed by			
Drawn by			
Checked by	No.	Description	Date
Approved by	REVISIONS		

THE WORKS — CAMBRIDGE DEPARTMENT OF PUBLIC

Client: CITY OF CAMBRIDGE, MA	Sheet: R-3.11
Project: RIVER STREET INFRASTRUCTURE AND STREETSCAPE PROJECT	Total Sheets: 381
Drawing: **ROADWAY GRADING PLAN AND PROFILE - 11**	File No.

File: C:\PWWORKING\EAST\D1\D0786396\7113XXX_(PROFILES).DWG Plotted: 5/2/2022 7:02:49 PM

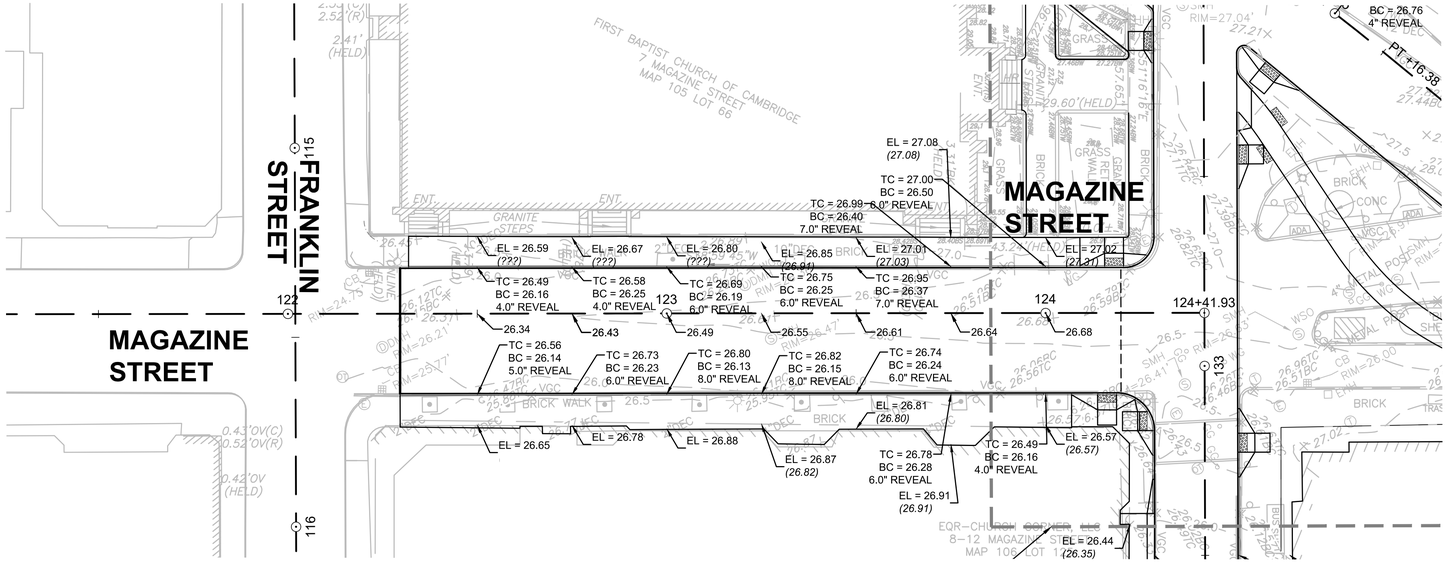

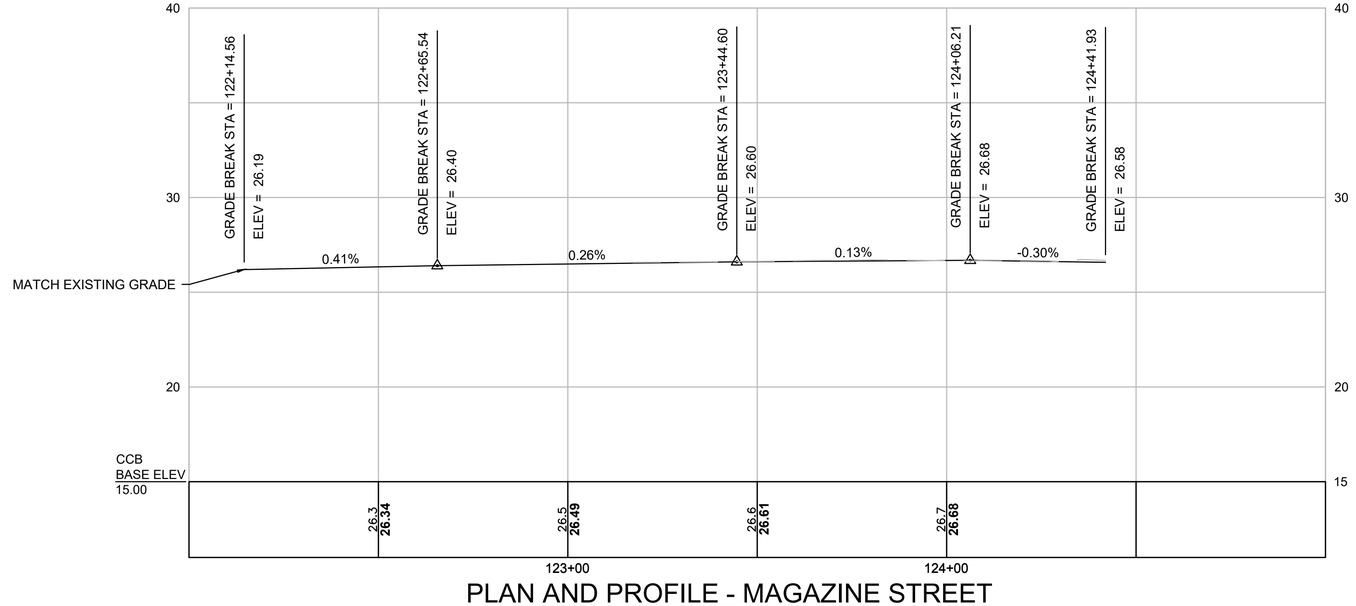

PLAN AND PROFILE - MAGAZINE STREET

HOR. SCALE IN FEET
20 0 20 40
5 0 5 10
VER. SCALE IN FEET

LEGEND

TC=20.64 BC=20.64 0" REVEAL	PROPOSED TOP OF CURB ELEVATION PROPOSED BOTTOM OF CURB ELEVATION CURB REVEAL
EL=20.64 *(20.64)*	PROPOSED ELEVATION AND EXISTING ELEVATION
EL=20.64	PROPOSED ELEVATION ONLY

ISSUED FOR BID

HDR ENGINEERING, INC.
99 HIGH STREET, SUITE 2300
BOSTON, MASSACHUSETTS 02110–2378
(617) 357–7700

COMMONWEALTH OF MASSACHUSETTS
PHILIP FUSCO
CIVIL
No. 45868
REGISTERED PROFESSIONAL ENGINEER

Scale			
Date			
Job No.			
Designed by			
Drawn by			
Checked by	No.	Description	Date
Approved by	REVISIONS		

THE WORKS — CAMBRIDGE DEPARTMENT OF PUBLIC WORKS

Client	CITY OF CAMBRIDGE, MA	Sheet	R-3.12
Project	RIVER STREET INFRASTRUCTURE AND STREETSCAPE PROJECT	Total Sheets	381
Drawing	**ROADWAY GRADING PLAN AND PROFILE - 12**	File No.	

File: C:\PWWORKING\EAST01\D0786396\7113XXX_(PROFILES).DWG Plotted: 5/2/2022 7:03:09 PM

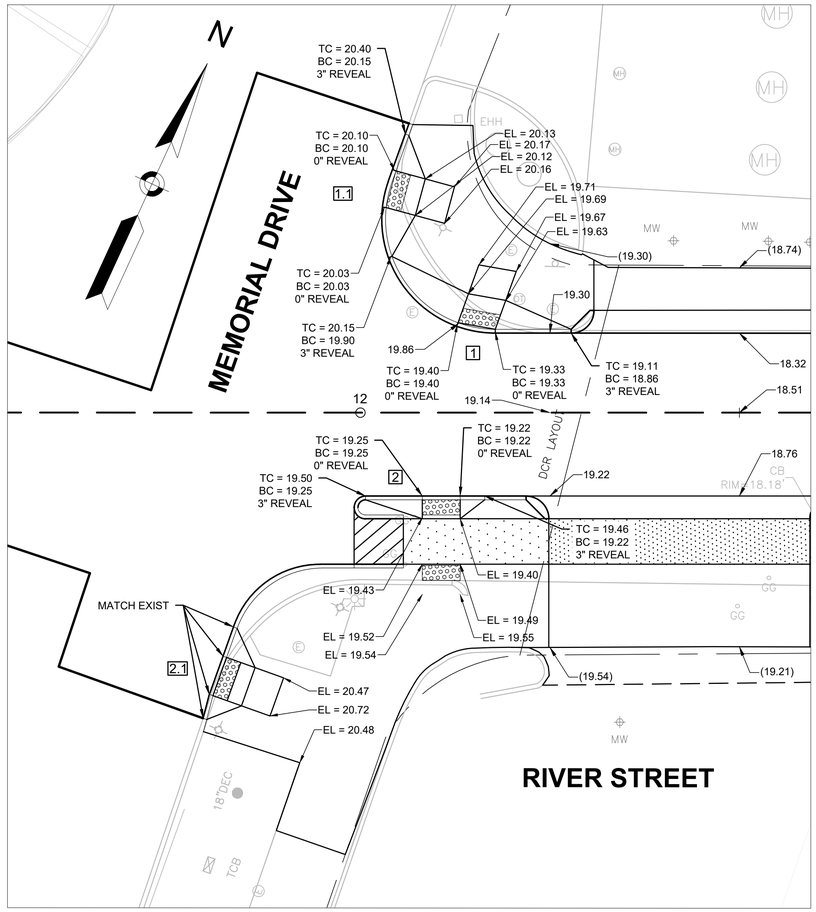

RIVER STREET AT MEMORIAL DRIVE
INTERSECTION

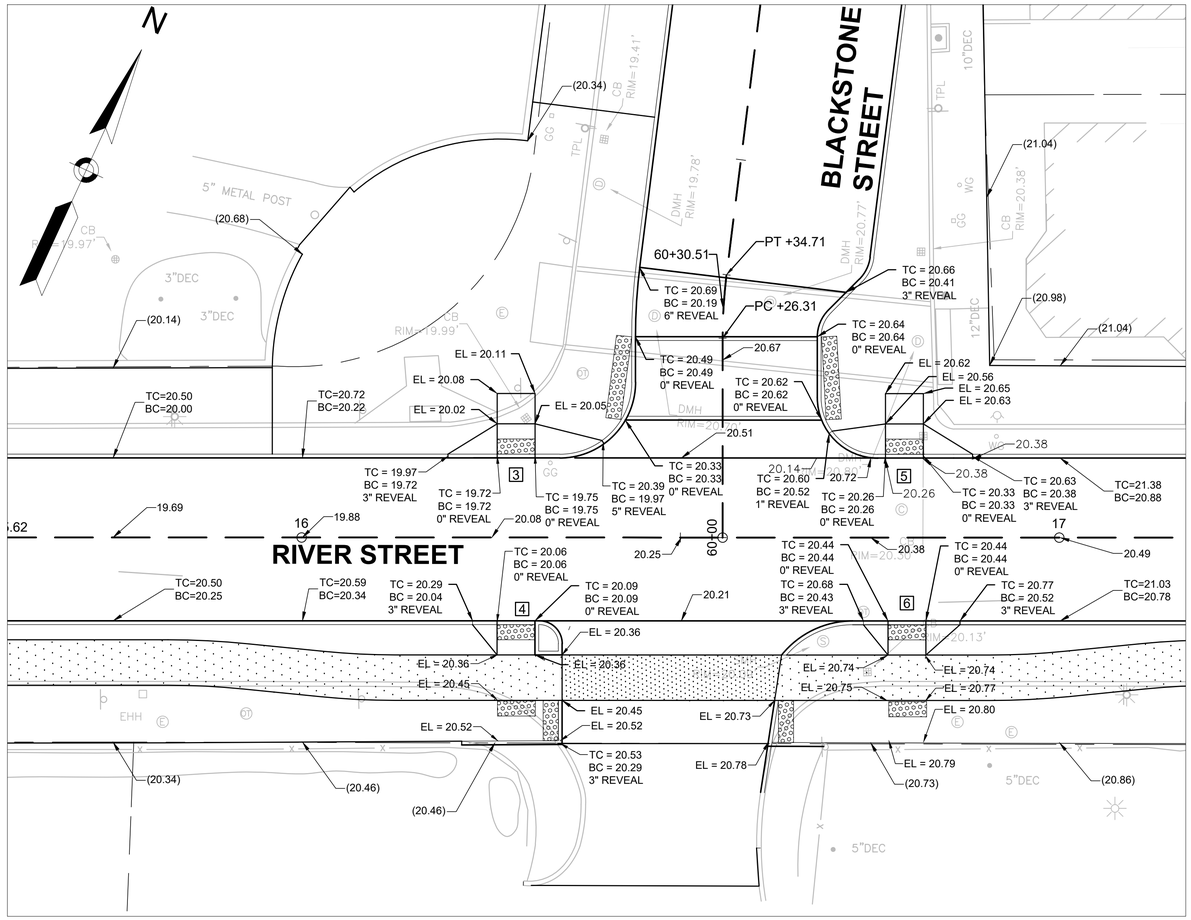

RIVER STREET AT BLACKSTONE STREET
INTERSECTION

LEGEND

TC=20.64 BC=20.64 0" REVEAL	PROPOSED TOP OF CURB ELEVATION PROPOSED BOTTOM OF CURB ELEVATION CURB REVEAL
EL=20.64 (20.64)	PROPOSED ELEVATION AND EXISTING ELEVATION
EL=20.64	PROPOSED ELEVATION ONLY

0 10 25 50

SCALE: 1" = 10'

ISSUED FOR BID

HDR ENGINEERING, INC.
99 HIGH STREET, SUITE 2300
BOSTON, MASSACHUSETTS 02110-2378
(617) 357-7700

COMMONWEALTH OF MASSACHUSETTS
PHILIP FUSCO
CIVIL
No. 45868
REGISTERED PROFESSIONAL ENGINEER

Scale			
Date			
Job No.			
Designed by			
Drawn by			
Checked by	No.	Description	Date
Approved by	REVISIONS		

THE WORKS — CAMBRIDGE DEPARTMENT OF PUBLIC

Client	CITY OF CAMBRIDGE, MA	Sheet	R-4.01
Project	RIVER STREET INFRASTRUCTURE AND STREETSCAPE PROJECT	Total Sheets	381
Drawing	**ROADWAY INTERSECTION GRADING PLAN - 1**	File No.	

File: C:\PW\WORKING\EAST01\D0786396\7113XXX_(INTERSECTION GRADING).DWG Plotted: 4/15/2022 3:12:03 PM

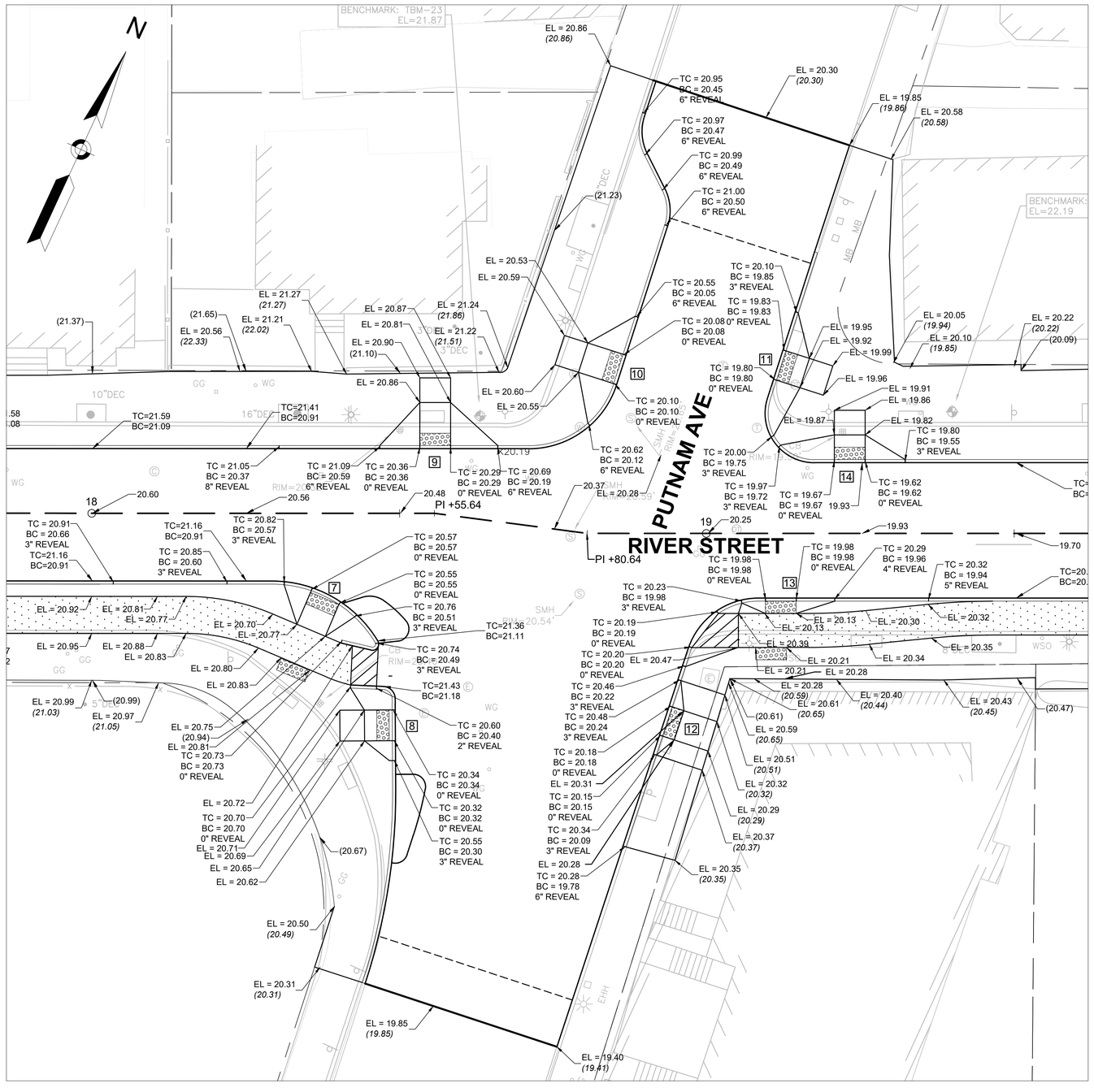

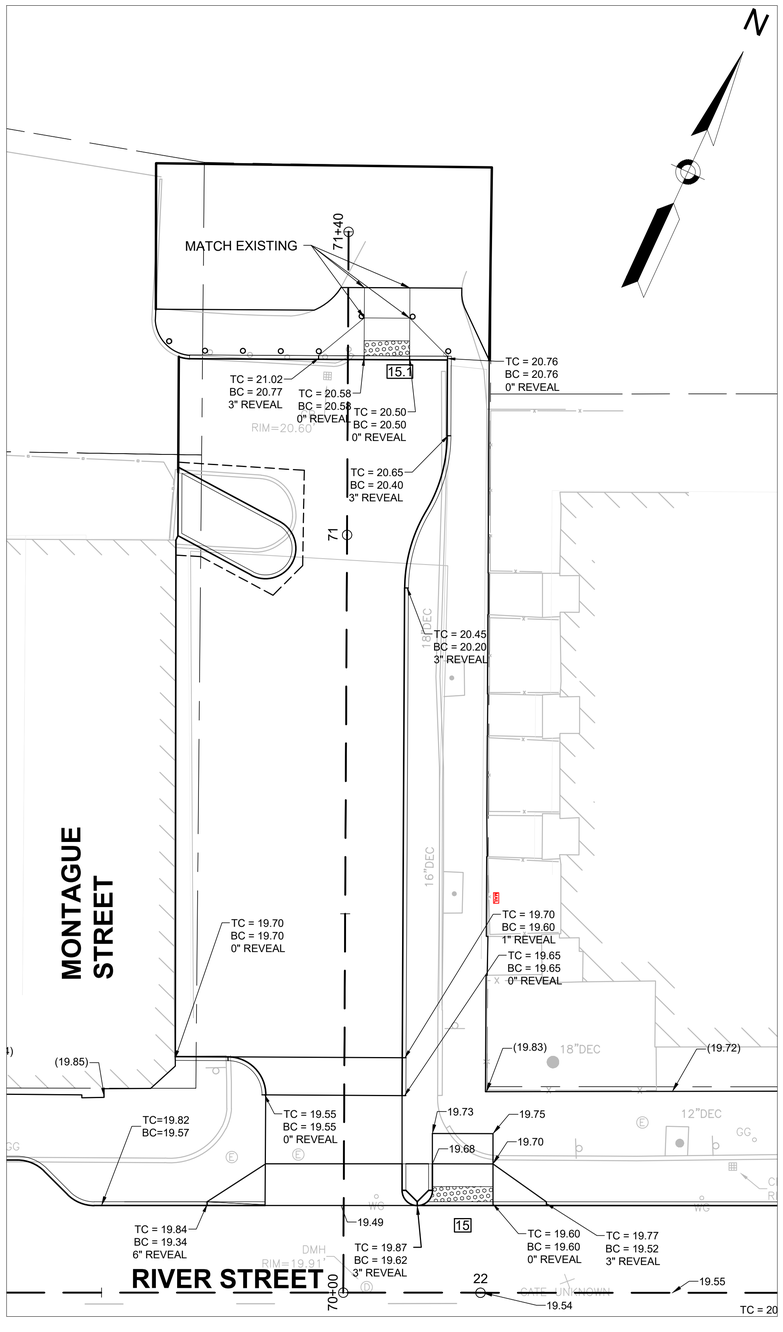

RIVER STREET AT PUTNAM AVE INTERSECTION

RIVER STREET AT MONTAGUE STREET INTERSECTION

0 10 25 50

SCALE: 1" = 10'

LEGEND

TC=20.64 BC=20.64 0" REVEAL	PROPOSED TOP OF CURB ELEVATION PROPOSED BOTTOM OF CURB ELEVATION CURB REVEAL
EL=20.64 (20.64)	PROPOSED ELEVATION AND EXISTING ELEVATION
EL=20.64	PROPOSED ELEVATION ONLY

ISSUED FOR BID

HDR ENGINEERING, INC.
99 HIGH STREET, SUITE 2300
BOSTON, MASSACHUSETTS 02110-2378
(617) 357-7700

COMMONWEALTH OF MASSACHUSETTS
PHILIP FUSCO
CIVIL
No. 45868
REGISTERED PROFESSIONAL ENGINEER

Scale			
Date			
Job No.			
Designed by			
Drawn by			
Checked by	No.	Description	Date
Approved by	REVISIONS		

THE WORKS — CAMBRIDGE DEPARTMENT OF PUBLIC WORKS

Client: CITY OF CAMBRIDGE, MA	Sheet: R-4.02
Project: RIVER STREET INFRASTRUCTURE AND STREETSCAPE PROJECT	Total Sheets: 381
Drawing: **ROADWAY INTERSECTION GRADING PLAN - 2**	File No.

File: C:\PWWORKING\EAST01\D07863961713XXX_(INTERSECTION GRADING).DWG Plotted: 4/15/2022 3:12:19 PM

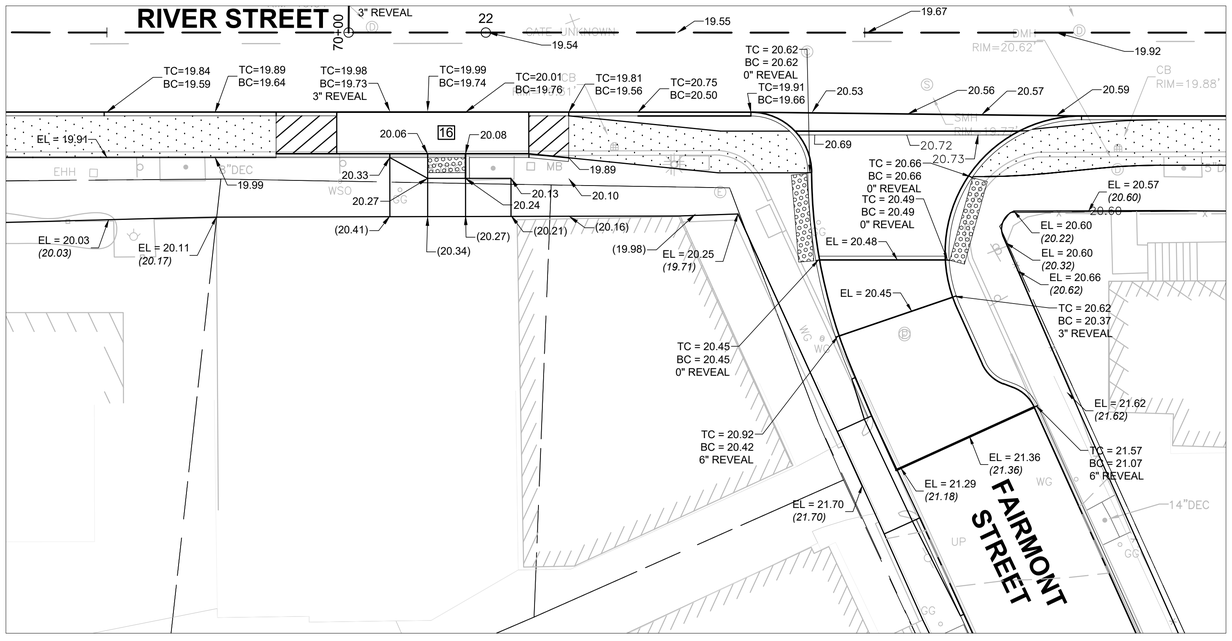

RIVER STREET AT FAIRMONT STREET
INTERSECTION

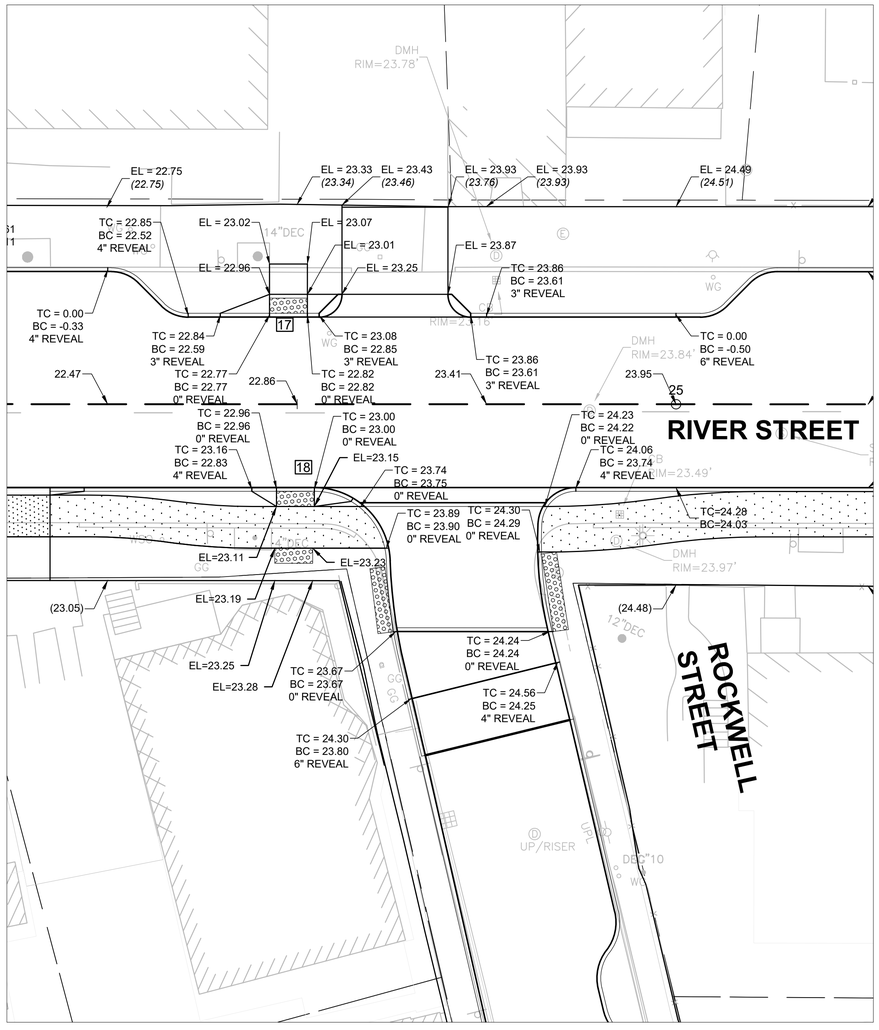

RIVER STREET AT ROCKWELL STREET
INTERSECTION

LEGEND

TC=20.64 BC=20.64 0" REVEAL	PROPOSED TOP OF CURB ELEVATION PROPOSED BOTTOM OF CURB ELEVATION CURB REVEAL
EL=20.64 (20.64)	PROPOSED ELEVATION AND EXISTING ELEVATION
EL=20.64	PROPOSED ELEVATION ONLY

0 10 25 50

SCALE: 1" = 10'

ISSUED FOR BID

HDR ENGINEERING, INC.
99 HIGH STREET, SUITE 2300
BOSTON, MASSACHUSETTS 02110-2378
(617) 357-7700

COMMONWEALTH OF MASSACHUSETTS
PHILIP FUSCO
CIVIL
No. 45868
REGISTERED PROFESSIONAL ENGINEER

Scale			
Date			
Job No.			
Designed by			
Drawn by			
Checked by	No.	Description	Date
Approved by	REVISIONS		

THE WORKS
CAMBRIDGE DEPARTMENT OF PUBLIC

Client: CITY OF CAMBRIDGE, MA	Sheet: R-4.03
Project: RIVER STREET INFRASTRUCTURE AND STREETSCAPE PROJECT	Total Sheets: 381
Drawing: **ROADWAY INTERSECTION GRADING PLAN - 3**	File No.

File: C:\PW\WORKING\EAST01\D0786396\7113XXX_(INTERSECTION GRADING).DWG Plotted: 4/15/2022 3:12:34 PM

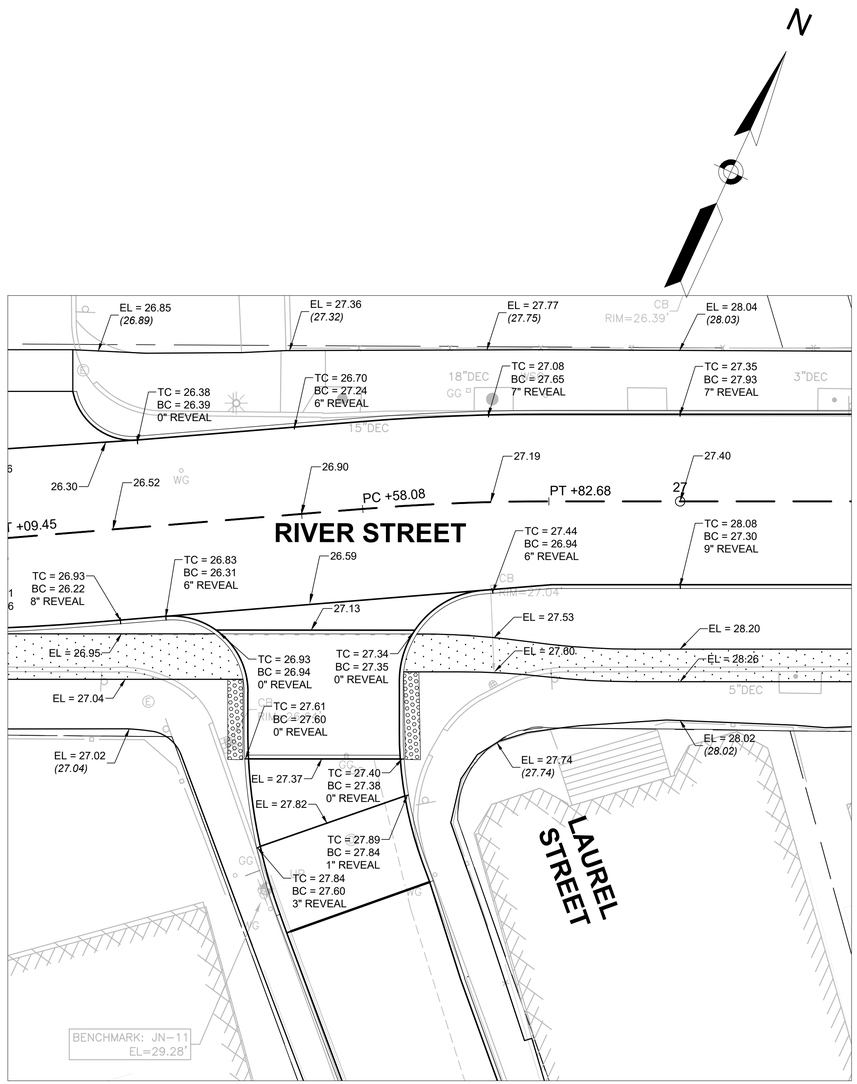

RIVER STREET AT LAUREL STREET
INTERSECTION

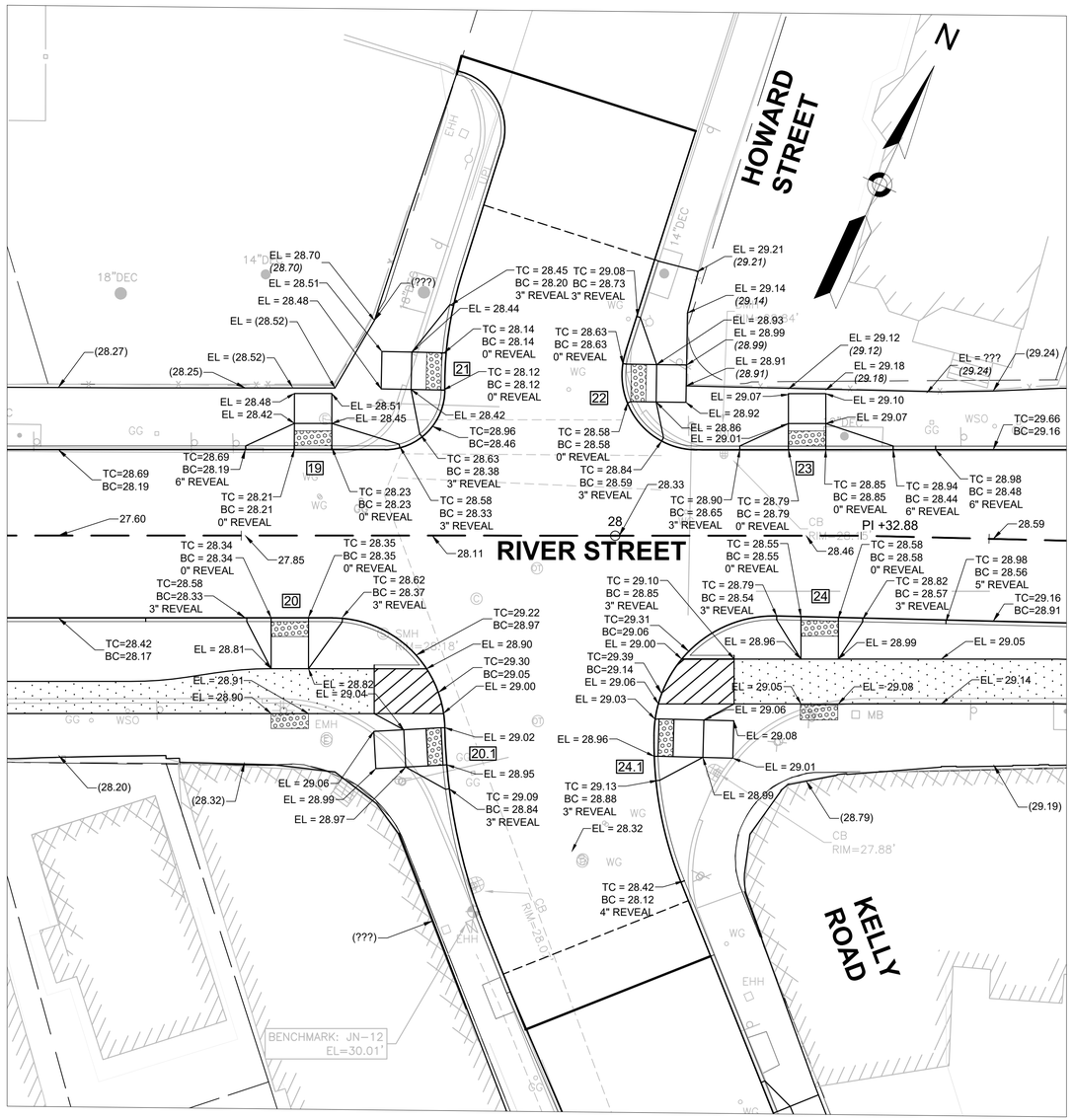

RIVER STREET AT HOWARD STREET AND KELLY ROAD
INTERSECTION

LEGEND

TC=20.64 BC=20.64 0" REVEAL	PROPOSED TOP OF CURB ELEVATION PROPOSED BOTTOM OF CURB ELEVATION CURB REVEAL
EL=20.64 (20.64)	PROPOSED ELEVATION AND EXISTING ELEVATION
EL=20.64	PROPOSED ELEVATION ONLY

0 10 25 50

SCALE: 1" = 10'

ISSUED FOR BID

HDR ENGINEERING, INC.
99 HIGH STREET, SUITE 2300
BOSTON, MASSACHUSETTS 02110-2378
(617) 357-7700

PHILIP FUSCO CIVIL No. 45868 REGISTERED PROFESSIONAL ENGINEER
COMMONWEALTH OF MASSACHUSETTS

Scale			
Date			
Job No.			
Designed by			
Drawn by			
Checked by	No.	Description	Date
Approved by	REVISIONS		

THE WORKS — CAMBRIDGE DEPARTMENT OF PUBLIC WORKS

Client: CITY OF CAMBRIDGE, MA	Sheet: R-4.04
Project: RIVER STREET INFRASTRUCTURE AND STREETSCAPE PROJECT	Total Sheets: 381
Drawing: **ROADWAY INTERSECTION GRADING PLAN - 4**	File No.

File: C:\PWWORKING\EAST01\D0786396\I7113XXX_(INTERSECTION GRADING).DWG Plotted: 4/15/2022 3:12:49 PM

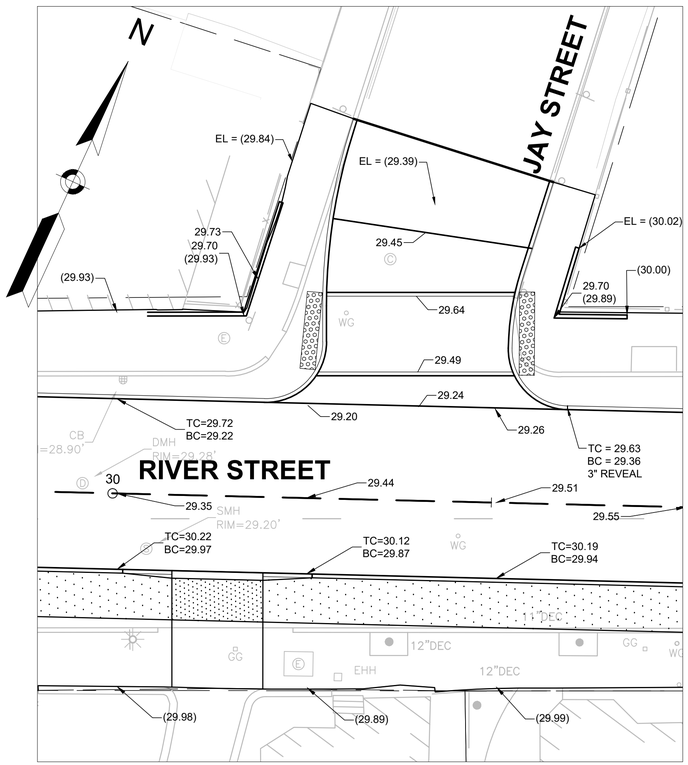

RIVER STREET AT JAY STREET INTERSECTION

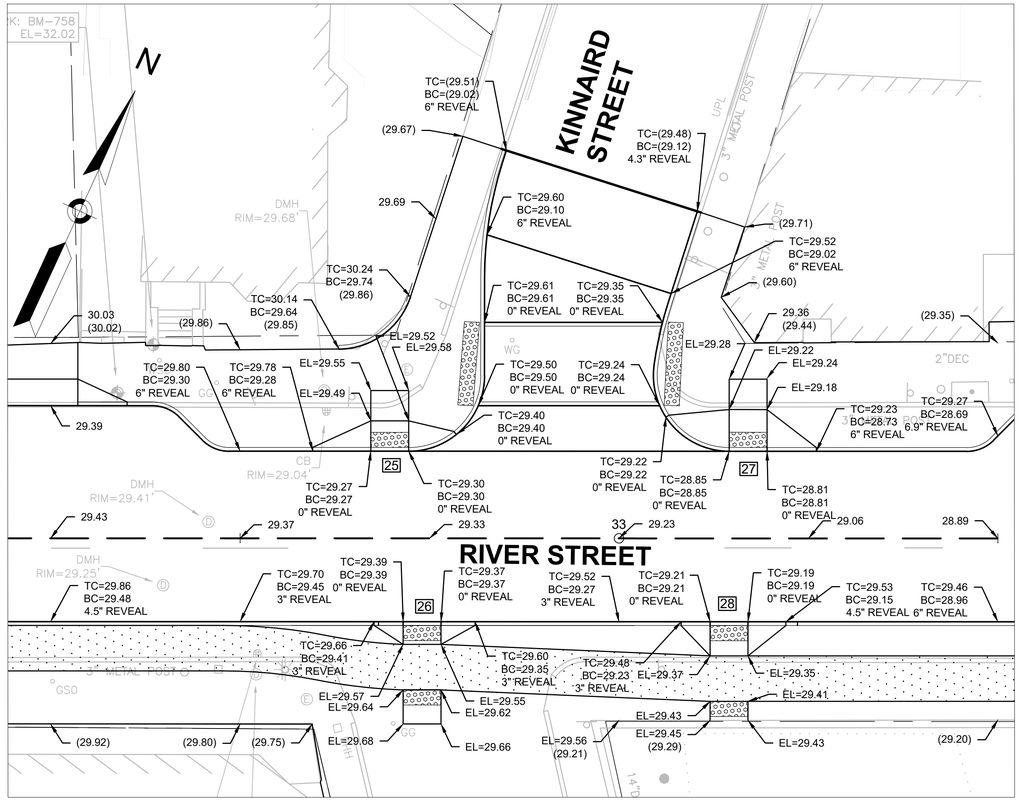

RIVER STREET AT KINNAIRD STREET INTERSECTION

LEGEND

TC=20.64 BC=20.64 0" REVEAL	PROPOSED TOP OF CURB ELEVATION PROPOSED BOTTOM OF CURB ELEVATION CURB REVEAL
EL=20.64 (20.64)	PROPOSED ELEVATION AND EXISTING ELEVATION
EL=20.64	PROPOSED ELEVATION ONLY

0 10 25 50

SCALE: 1" = 10'

ISSUED FOR BID

HDR ENGINEERING, INC.
99 HIGH STREET, SUITE 2300
BOSTON, MASSACHUSETTS 02110-2378
(617) 357-7700

COMMONWEALTH OF MASSACHUSETTS
PHILIP FUSCO
CIVIL
No. 45868
REGISTERED PROFESSIONAL ENGINEER

Scale			
Date			
Job No.			
Designed by			
Drawn by			
Checked by	No.	Description	Date
Approved by	REVISIONS		

THE WORKS
CAMBRIDGE DEPARTMENT OF PUBLIC

Client: CITY OF CAMBRIDGE, MA	Sheet: R-4.05
Project: RIVER STREET INFRASTRUCTURE AND STREETSCAPE PROJECT	Total Sheets: 381
Drawing: **ROADWAY INTERSECTION GRADING PLAN - 5**	File No.

File: C:\PW\WORKING\EAST01\D0786396\7113XXX_(INTERSECTION GRADING).DWG Plotted: 4/15/2022 3:13:04 PM

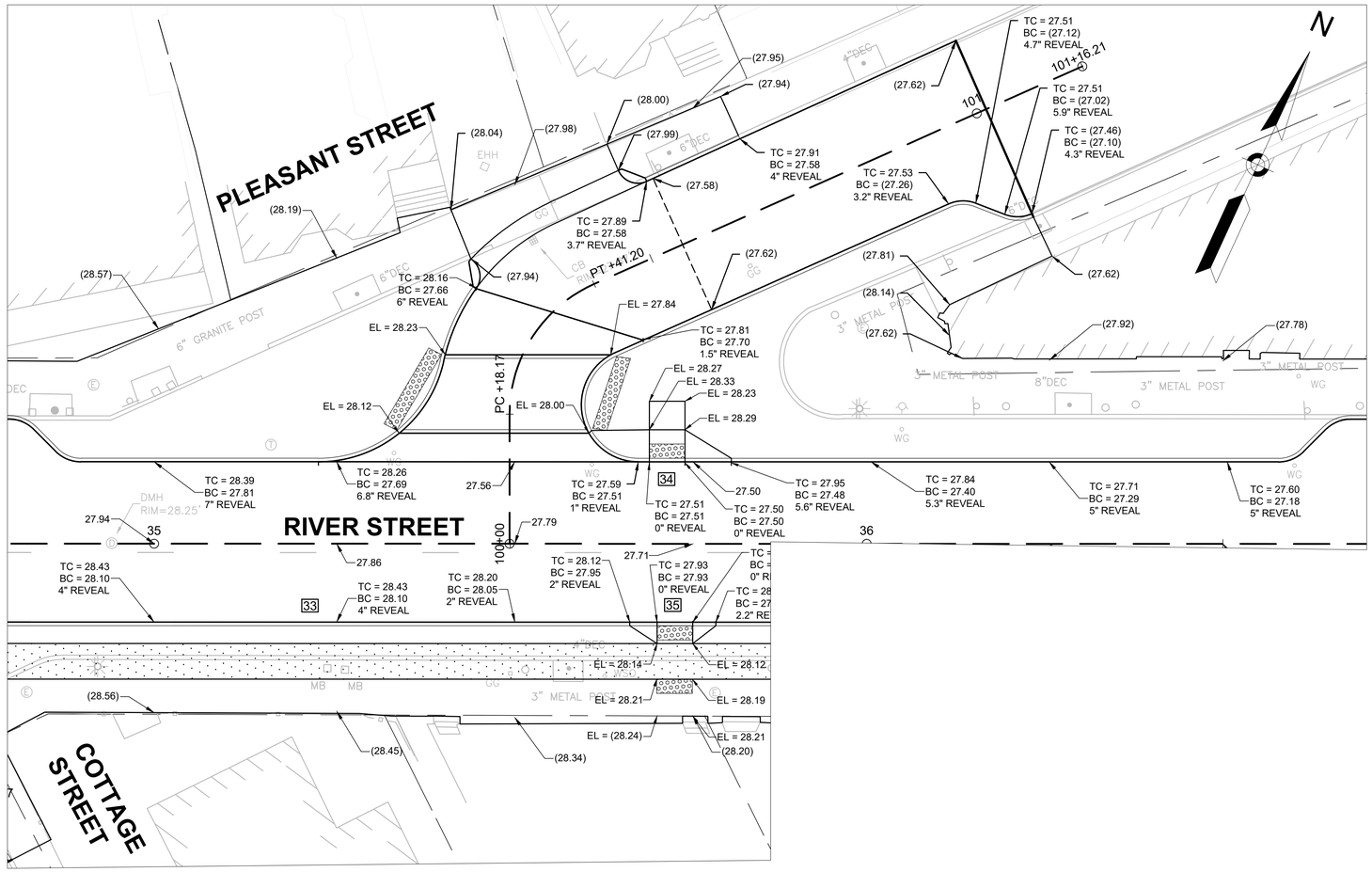

RIVER STREET AT PLEASANT STREET
INTERSECTION

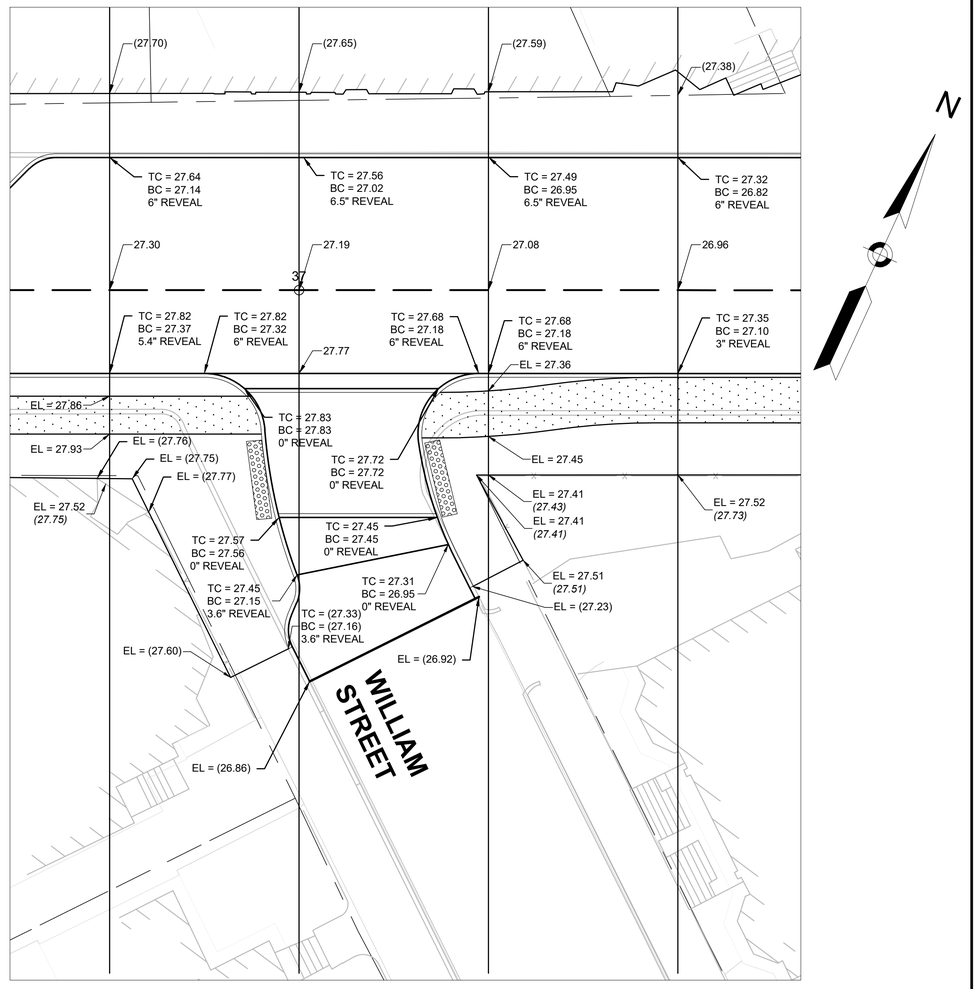

RIVER STREET AT WILLIAM STREET
INTERSECTION

LEGEND

TC=20.64 BC=20.64 0" REVEAL	PROPOSED TOP OF CURB ELEVATION PROPOSED BOTTOM OF CURB ELEVATION CURB REVEAL
EL=20.64 (20.64)	PROPOSED ELEVATION AND EXISTING ELEVATION
EL=20.64	PROPOSED ELEVATION ONLY

0 10 25 50

SCALE: 1" = 10'

ISSUED FOR BID

HDR ENGINEERING, INC.
99 HIGH STREET, SUITE 2300
BOSTON, MASSACHUSETTS 02110–2378
(617) 357–7700

COMMONWEALTH OF MASSACHUSETTS
PHILIP FUSCO
CIVIL
No. 45868
REGISTERED PROFESSIONAL ENGINEER

Scale			
Date			
Job No.			
Designed by			
Drawn by			
Checked by	No.	Description	Date
Approved by	REVISIONS		

THE CAMBRIDGE DEPARTMENT OF PUBLIC WORKS

Client: CITY OF CAMBRIDGE, MA	Sheet: R-4.06
Project: RIVER STREET INFRASTRUCTURE AND STREETSCAPE PROJECT	Total Sheets: 381
Drawing: **ROADWAY INTERSECTION GRADING PLAN - 6**	File No.

3:13:18 PM
File: C:\PWWORKING\EAST01\D0786396\7113XXX_(INTERSECTION GRADING).DWG Plotted: 4/15/2022

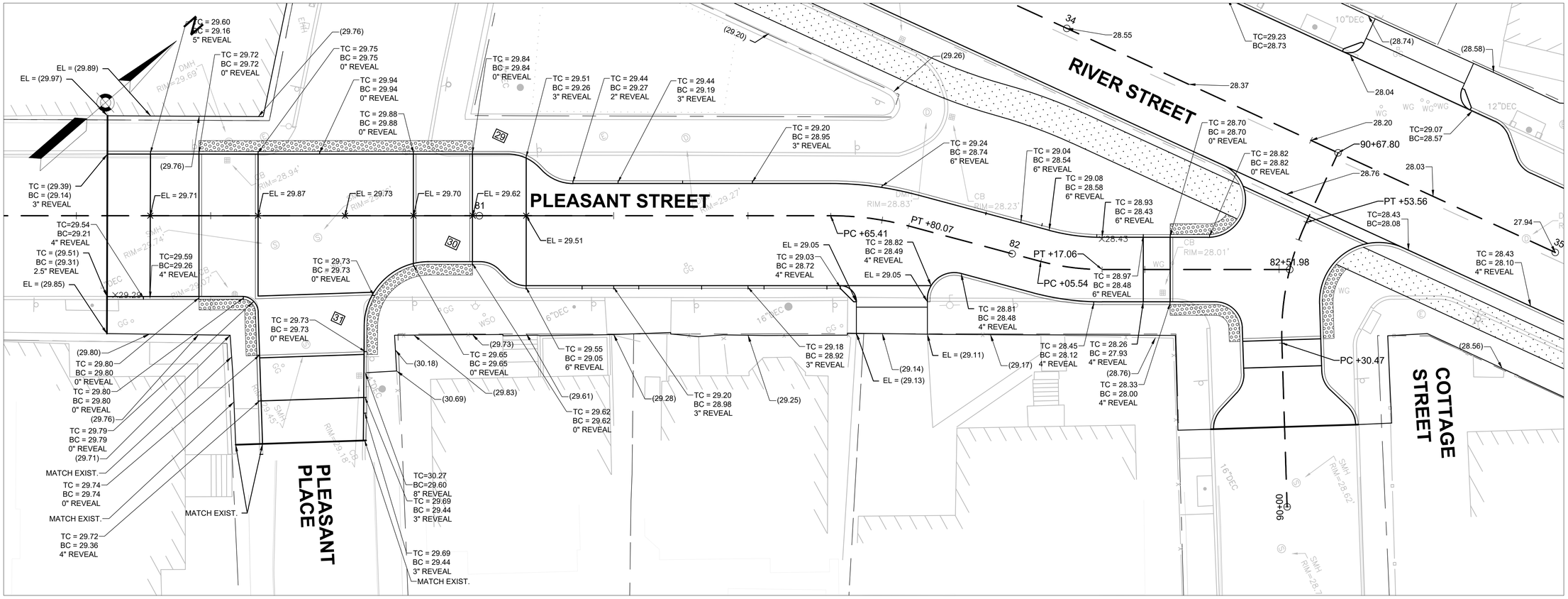

PLEASANT STREET AND TUBMAN SQUARE

LEGEND

TC=20.64 BC=20.64 0" REVEAL	PROPOSED TOP OF CURB ELEVATION PROPOSED BOTTOM OF CURB ELEVATION CURB REVEAL
EL=20.64 (20.64)	PROPOSED ELEVATION AND EXISTING ELEVATION
EL=20.64	PROPOSED ELEVATION ONLY

0 10 25 50

SCALE: 1" = 10'

ISSUED FOR BID

HDR ENGINEERING, INC.
99 HIGH STREET, SUITE 2300
BOSTON, MASSACHUSETTS 02110-2378
(617) 357-7700

COMMONWEALTH OF MASSACHUSETTS
PHILIP FUSCO
CIVIL
No. 45868
REGISTERED PROFESSIONAL ENGINEER

Scale			
Date			
Job No.			
Designed by			
Drawn by			
Checked by	No.	Description	Date
Approved by	REVISIONS		

CAMBRIDGE DEPARTMENT OF PUBLIC WORKS

Client	CITY OF CAMBRIDGE, MA	Sheet	R-4.07
Project	RIVER STREET INFRASTRUCTURE AND STREETSCAPE PROJECT	Total Sheets	381
Drawing	**ROADWAY INTERSECTION GRADING PLAN - 7**	File No.	

File: C:\PWWORKING\EAST01\D0786396\7113XXX_(INTERSECTION GRADING).DWG Plotted: 4/15/2022 3:13:29 PM

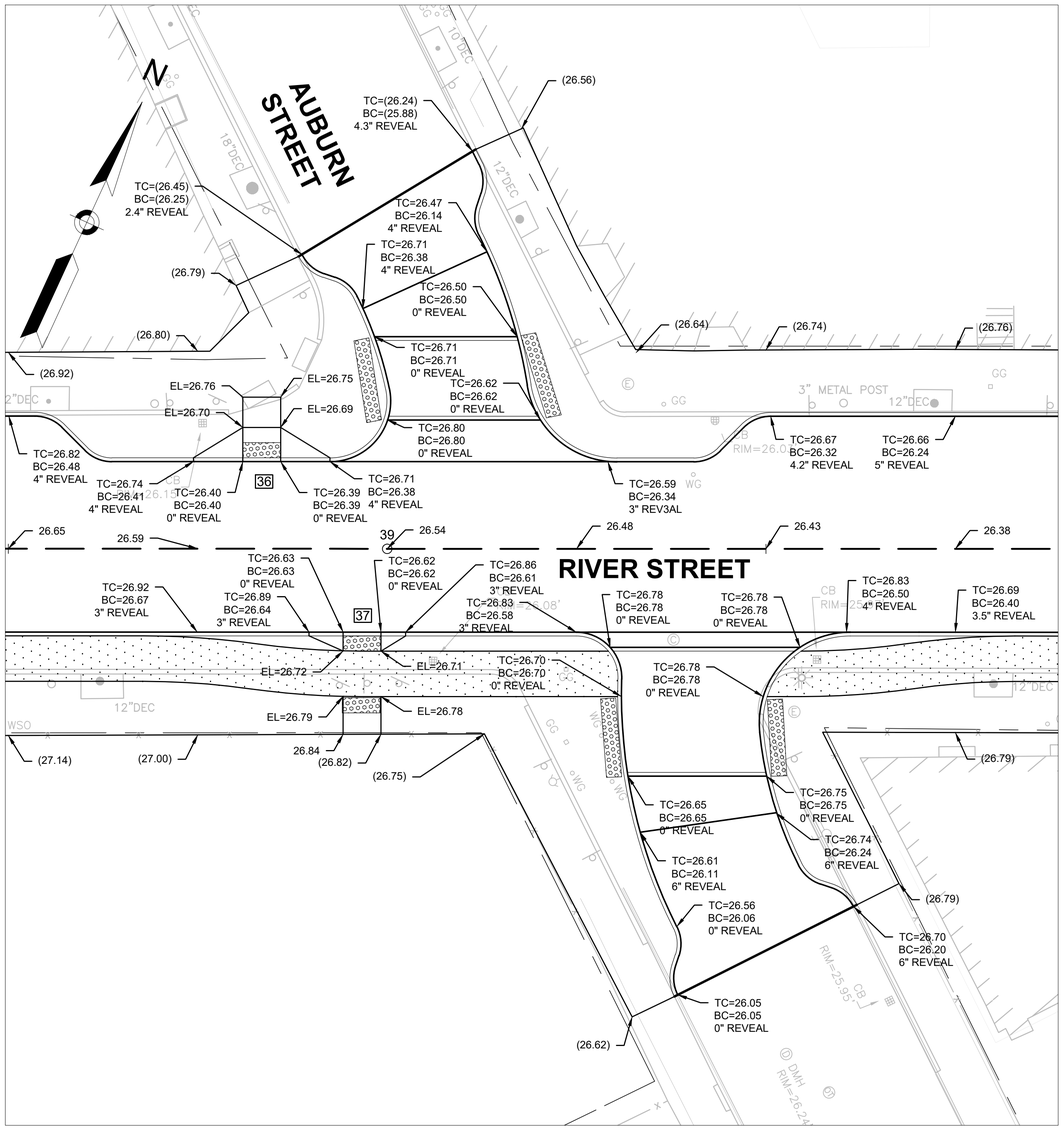

SEE SHEET R-4.08A

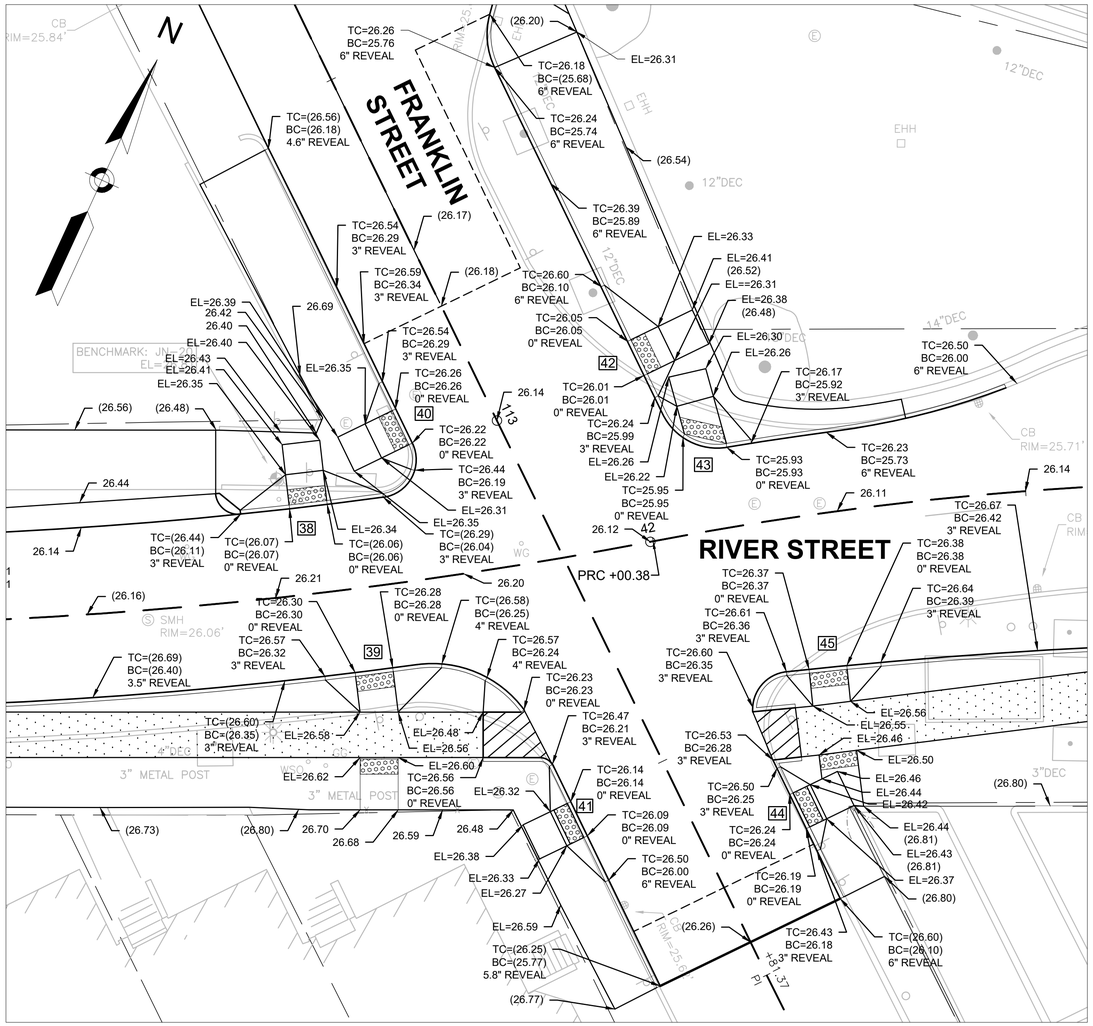

RIVER STREET AT AUBURN STREET INTERSECTION

RIVER STREET AT FRANKLIN STREET INTERSECTION

LEGEND

TC=20.64 BC=20.64 0" REVEAL	PROPOSED TOP OF CURB ELEVATION PROPOSED BOTTOM OF CURB ELEVATION CURB REVEAL
EL=20.64 (20.64)	PROPOSED ELEVATION AND EXISTING ELEVATION
EL=20.64	PROPOSED ELEVATION ONLY

0 10 25 50

SCALE: 1" = 10'

ISSUED FOR BID

HDR ENGINEERING, INC.
99 HIGH STREET, SUITE 2300
BOSTON, MASSACHUSETTS 02110–2378
(617) 357–7700

PHILIP FUSCO CIVIL No. 45868 REGISTERED PROFESSIONAL ENGINEER
COMMONWEALTH OF MASSACHUSETTS

Scale			
Date			
Job No.			
Designed by			
Drawn by			
Checked by	No.	Description	Date
Approved by	REVISIONS		

THE WORKS — CAMBRIDGE DEPARTMENT OF PUBLIC WORKS

Client: CITY OF CAMBRIDGE, MA	Sheet: R-4.08
Project: RIVER STREET INFRASTRUCTURE AND STREETSCAPE PROJECT	Total Sheets: 381
Drawing: **ROADWAY INTERSECTION GRADING PLAN - 8**	File No.

File: C:\PWWORKING\EAST01\D0786396\7113XXX_(INTERSECTION GRADING).DWG Plotted: 4/15/2022 3:13:45 PM

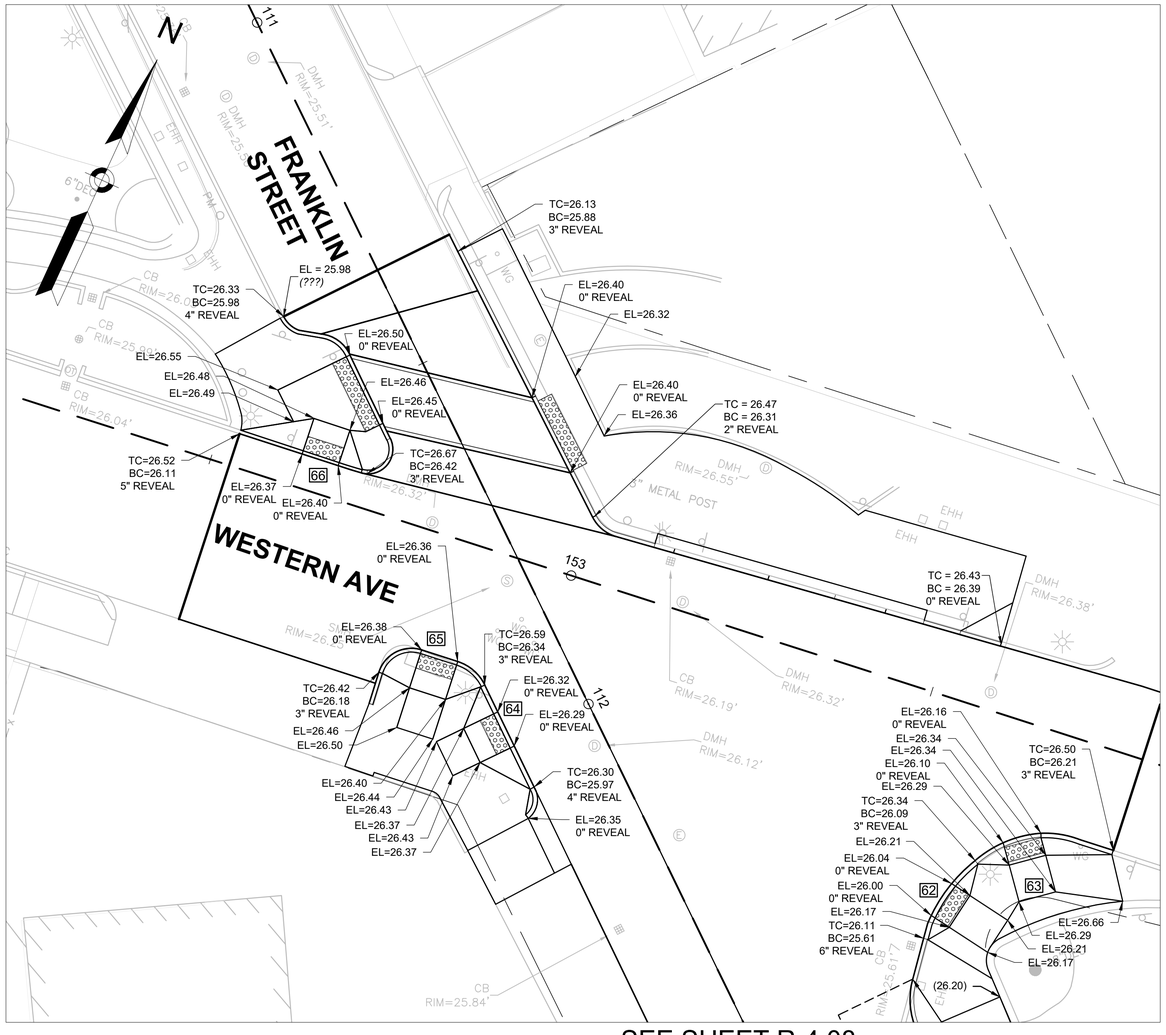

SEE SHEET R-4.08

WESTERN AVENUE AT FRANKLIN STREET INTERSECTION

LEGEND

TC=20.64 BC=20.64 0" REVEAL	PROPOSED TOP OF CURB ELEVATION PROPOSED BOTTOM OF CURB ELEVATION CURB REVEAL
EL=20.64 (20.64)	PROPOSED ELEVATION AND EXISTING ELEVATION
EL=20.64	PROPOSED ELEVATION ONLY

0 10 25 50

SCALE: 1" = 10'

ISSUED FOR BID

HDR ENGINEERING, INC.
99 HIGH STREET, SUITE 2300
BOSTON, MASSACHUSETTS 02110-2378
(617) 357-7700

COMMONWEALTH OF MASSACHUSETTS
PHILIP FUSCO
CIVIL
No. 45868
REGISTERED PROFESSIONAL ENGINEER

Scale			
Date			
Job No.			
Designed by			
Drawn by			
Checked by	No.	Description	Date
Approved by	REVISIONS		

THE WORKS — CAMBRIDGE DEPARTMENT OF PUBLIC

Client	CITY OF CAMBRIDGE, MA	Sheet	R-4.08A
Project	RIVER STREET INFRASTRUCTURE AND STREETSCAPE PROJECT	Total Sheets	381
Drawing	**ROADWAY INTERSECTION GRADING PLAN - 8A**	File No.	

File: C:\PW\WORKING\EAST01\D0786396\7113XXX_(INTERSECTION GRADING).DWG Plotted: 4/15/2022 3:13:54 PM

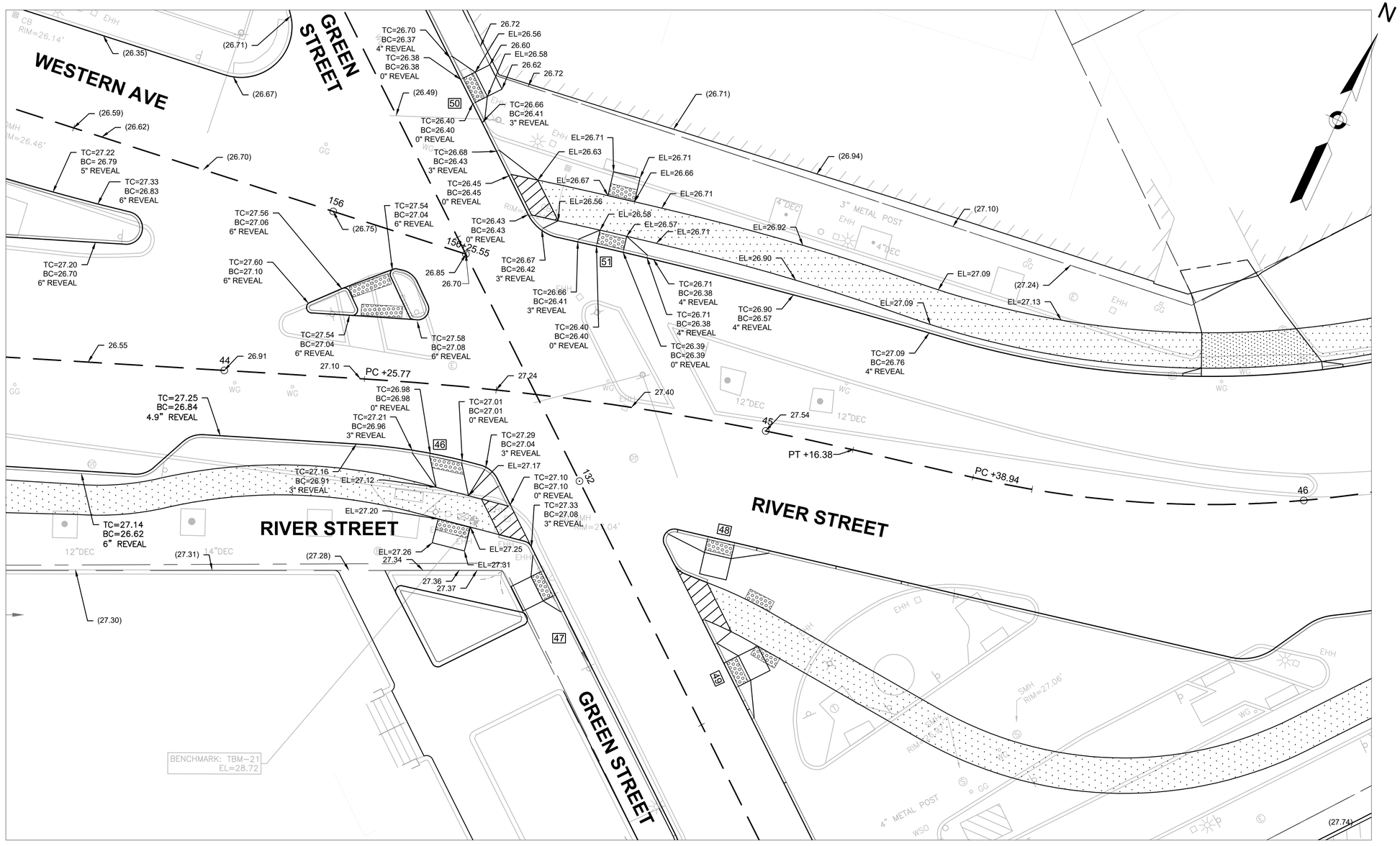

RIVER STREET AT GREEN STREET INTERSECTION

LEGEND

TC=20.64 BC=20.64 0" REVEAL	PROPOSED TOP OF CURB ELEVATION PROPOSED BOTTOM OF CURB ELEVATION CURB REVEAL
EL=20.64 (20.64)	PROPOSED ELEVATION AND EXISTING ELEVATION
EL=20.64	PROPOSED ELEVATION ONLY

0 10 25 50

SCALE: 1" = 10'

ISSUED FOR BID

HDR ENGINEERING, INC.
99 HIGH STREET, SUITE 2300
BOSTON, MASSACHUSETTS 02110-2378
(617) 357-7700

COMMONWEALTH OF MASSACHUSETTS
PHILIP FUSCO
CIVIL
No. 45868
REGISTERED PROFESSIONAL ENGINEER

Scale			
Date			
Job No.			
Designed by			
Drawn by			
Checked by	No.	Description	Date
Approved by	REVISIONS		

THE WORKS — CAMBRIDGE DEPARTMENT OF PUBLIC WORKS

Client: CITY OF CAMBRIDGE, MA	Sheet: R-4.09
Project: RIVER STREET INFRASTRUCTURE AND STREETSCAPE PROJECT	Total Sheets: 381
Drawing: **ROADWAY INTERSECTION GRADING PLAN - 9**	File No.

File: C:\PWWORKING\EAST01\D0786396\I7113XXX_(INTERSECTION GRADING).DWG Plotted: 4/15/2022 3:14:04 PM

RIVER STREET AT MASSACHUSETTS AVE INTERSECTION

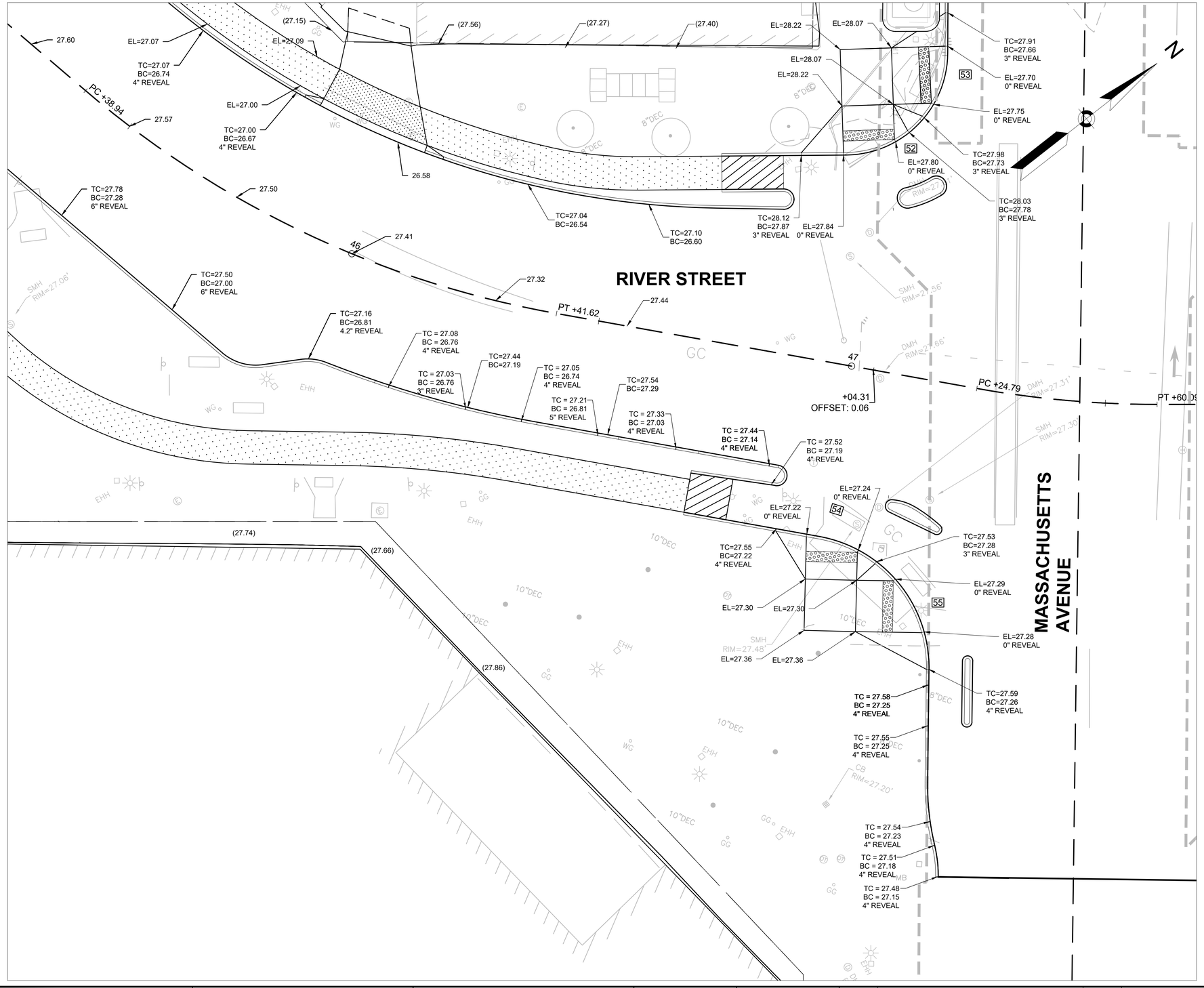

LEGEND

TC=20.64 BC=20.64 0" REVEAL	PROPOSED TOP OF CURB ELEVATION PROPOSED BOTTOM OF CURB ELEVATION CURB REVEAL
EL=20.64 (20.64)	PROPOSED ELEVATION AND EXISTING ELEVATION
EL=20.64	PROPOSED ELEVATION ONLY

0 10 25 50

SCALE: 1" = 10'

ISSUED FOR BID

HDR ENGINEERING, INC.
99 HIGH STREET, SUITE 2300
BOSTON, MASSACHUSETTS 02110-2378
(617) 357-7700

COMMONWEALTH OF MASSACHUSETTS
PHILIP FUSCO
CIVIL
No. 45868
REGISTERED PROFESSIONAL ENGINEER

Scale			
Date			
Job No.			
Designed by			
Drawn by			
Checked by	No.	Description	Date
Approved by	REVISIONS		

THE WORKS — CAMBRIDGE DEPARTMENT OF PUBLIC WORKS

Client: CITY OF CAMBRIDGE, MA

Project: RIVER STREET
INFRASTRUCTURE AND STREETSCAPE PROJECT

Drawing: **ROADWAY INTERSECTION GRADING PLAN - 10**

Sheet: R-4.10

Total Sheets: 381

File No.

File: C:\PWWORKING\EAST\011D0786396\7113XXX_(INTERSECTION GRADING).DWG Plotted: 4/15/2022 3:14:14 PM

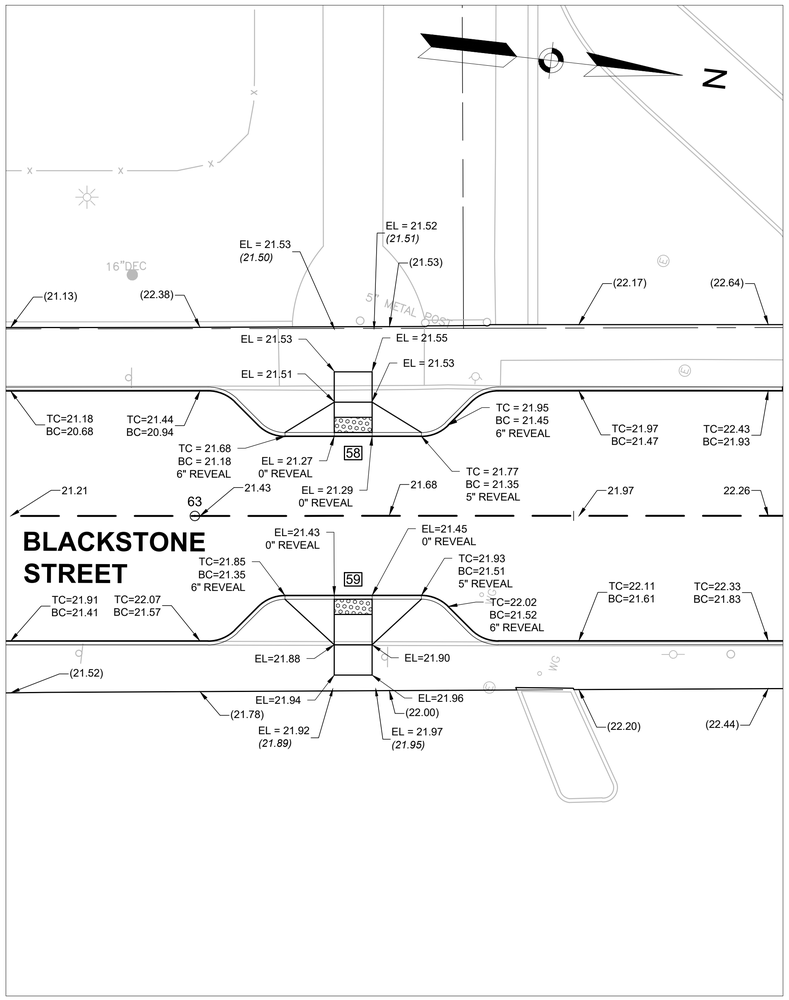

BLACKSTONE STREET AT
RIVERSIDE PRESS PARK

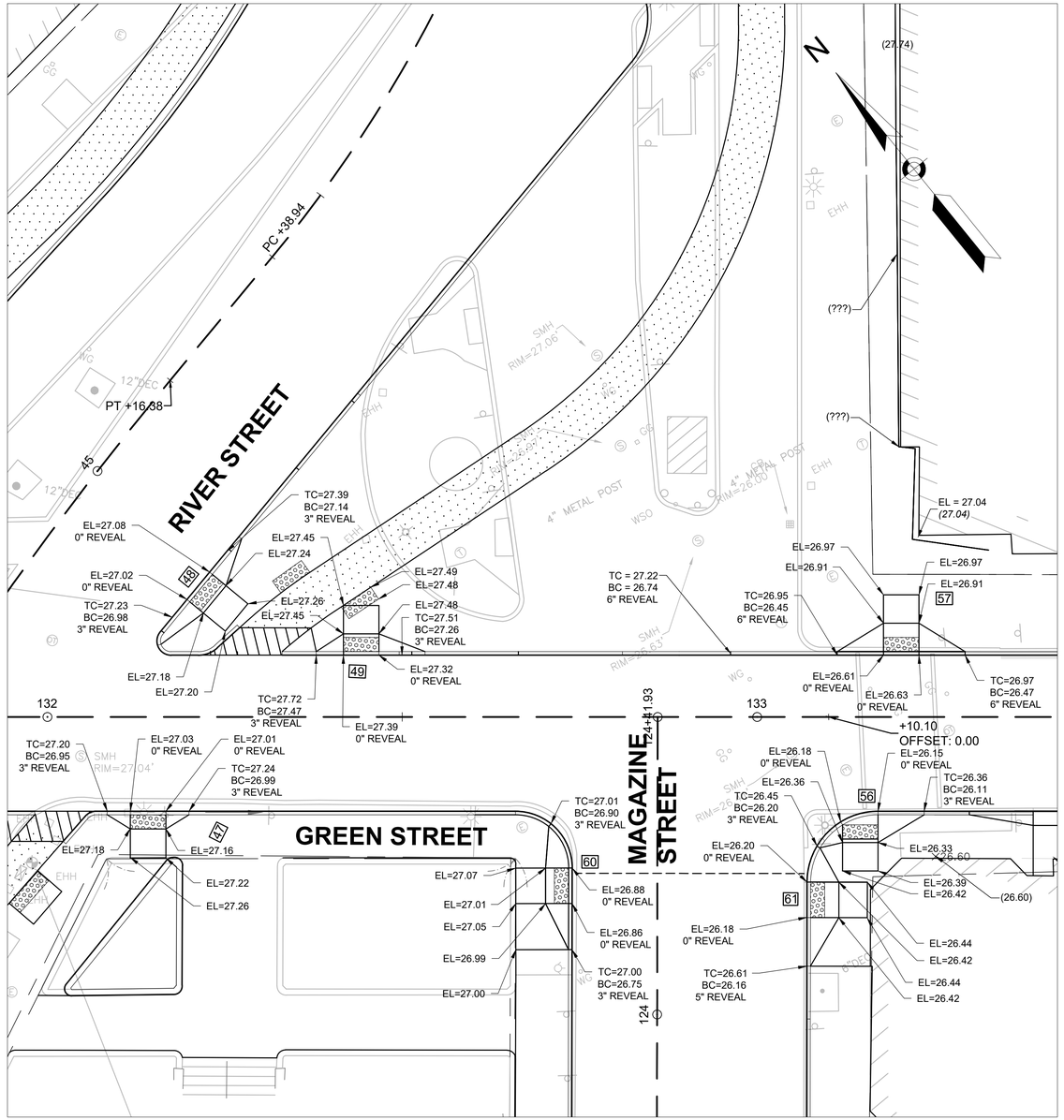

GREEN STREET AT WESTERN AVE AND RIVER STREET
INTERSECTION

LEGEND

TC=20.64 BC=20.64 0" REVEAL	PROPOSED TOP OF CURB ELEVATION PROPOSED BOTTOM OF CURB ELEVATION CURB REVEAL
EL=20.64 (20.64)	PROPOSED ELEVATION AND EXISTING ELEVATION
EL=20.64	PROPOSED ELEVATION ONLY

0 10 25 50

SCALE: 1" = 10'

ISSUED FOR BID

HDR ENGINEERING, INC.
99 HIGH STREET, SUITE 2300
BOSTON, MASSACHUSETTS 02110-2378
(617) 357-7700

COMMONWEALTH OF MASSACHUSETTS
PHILIP FUSCO
CIVIL
No. 45868
REGISTERED PROFESSIONAL ENGINEER

Scale			
Date			
Job No.			
Designed by			
Drawn by			
Checked by	No.	Description	Date
Approved by	REVISIONS		

THE CAMBRIDGE DEPARTMENT OF PUBLIC WORKS

Client	CITY OF CAMBRIDGE, MA	Sheet	R-4.11
Project	RIVER STREET INFRASTRUCTURE AND STREETSCAPE PROJECT	Total Sheets	381
Drawing	**ROADWAY INTERSECTION GRADING PLAN - 11**	File No.	

File: C:\PWWORKING\EAST01\D0786396\7113XXX_(INTERSECTION GRADING).DWG Plotted: 4/15/2022 3:14:29 PM

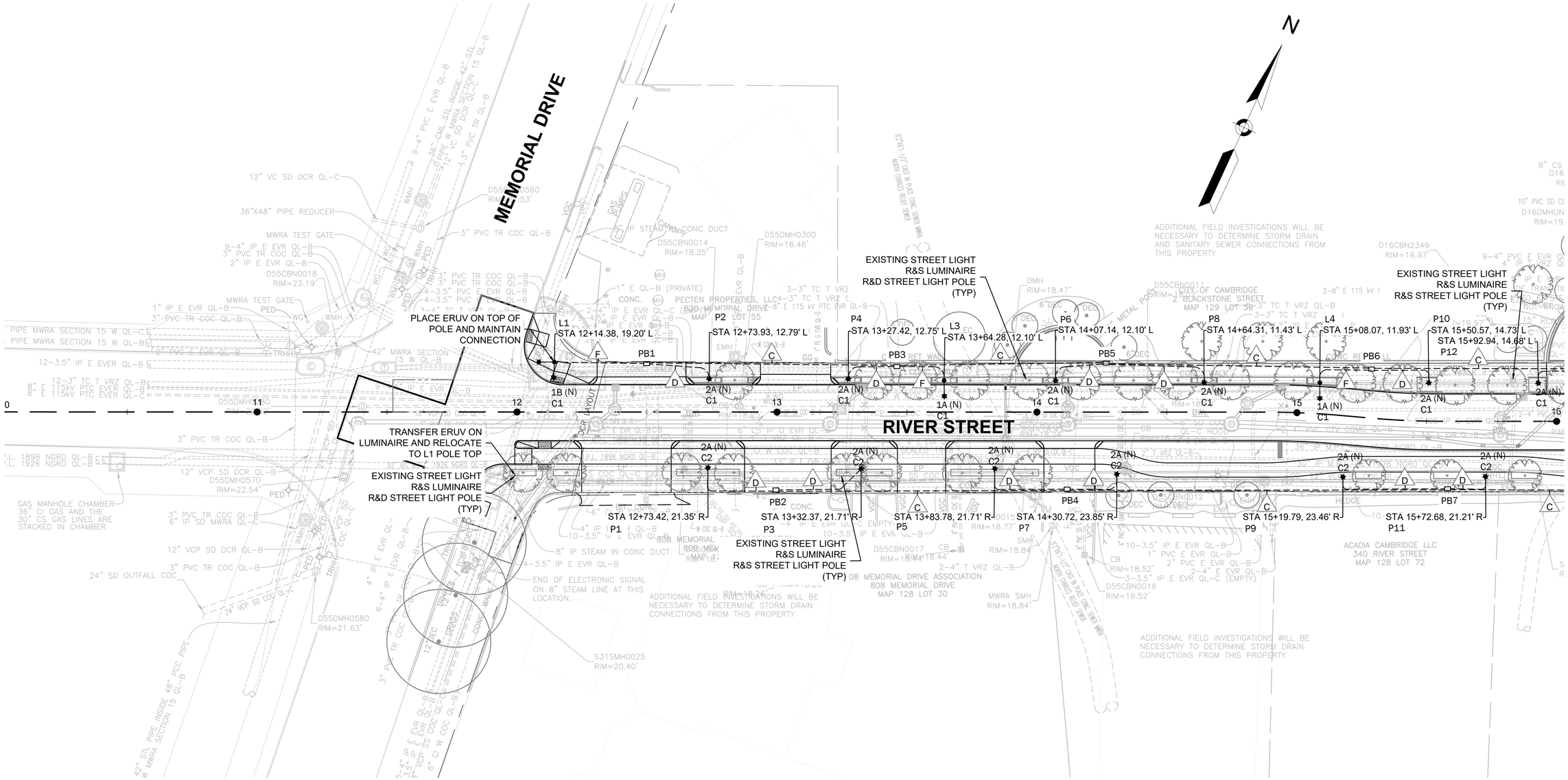

SEE SHEET E-1.02

CONDUIT & CIRCUIT SCHEDULE

C
- 1 OF 4 IN PLASTIC CONDUIT
- 3 OF 1/0 AWG CONDUCTOR (LIGHTING)
- 1 OF 1/0 AWG CONDUCTOR (GROUND)
- 1 OF 4 IN PLASTIC CONDUIT (SPARE)

D
- 1 OF 2 IN PLASTIC CONDUIT
- 2 OF AWG NO. 10 CONDUCTOR (LIGHTING)
- 1 OF AWG NO. 10 CONDUCTOR (GROUND)

F
- 1 OF 2 IN PLASTIC CONDUIT
- 2 OF AWG NO. 10 CONDUCTOR (LIGHTING)
- 2 OF AWG NO. 10 CONDUCTOR (GROUND)
- 2 OF AWG NO. 10 CONDUCTOR (RECEPTACLE)

PLAN

0 20 50 100

SCALE: 1" = 20'

NOTES:

1. EXISTING COBRA LIGHT POLES, BASES, AND LUMINAIRES SEE DISPOSITION PLANS.
2. PROVIDE 3/4" X 8' COPPER GROUND ROD AT EACH NEW HANDHOLE. GROUND EACH POLE TO GROUND ROD.
3. SEE SHEET ED-1.02 FOR GENERAL ELECTRICAL DETAILS AND LIGHTING TYPES.
4. ALL LIGHT POLE LOCATIONS SHALL BE STAKED OUT IN THE FIELD FOR REVIEW AND APPROVAL BY ENGINEER PRIOR TO INSTALLATION OF FOUNDATION. MINIMUM CLEARANCE OF 2' FROM EDGE OF BIKE LANE
5. UNLESS STATED OTHERWISE, ALL CONDUIT SHALL BE ENCASED IN CONCRETE. SEE DETAIL SHEET ED-1.01.
6. SEE CIVIL DRAWINGS FOR PROPOSED SEWER, DRAIN, WATER, AND OTHER UTILITY COORDINATION WORK. SUBSURFACE DESIGN SHOWN FOR REFERENCE ONLY.
7. LUMINAIRES IN RESIDENTIAL AREAS TO HAVE HOUSE SIDE SHIELD INSTALLED

LIGHTING FIXTURE LEGEND:

- TYPE 1A - DECORATIVE PENDANT LIGHTING FIXTURE SINGLE POLE MOUNTED W/ DUPLEX GFI RECEPTACLES
- TYPE 1B - DECORATIVE PENDANT LIGHTING FIXTURE DOUBLE POLE MOUNTED W/ DUPLEX GFI RECEPTACLES
- TYPE 2A - LED ACORN PEDESTRIAN LIGHT FIXTURE WITH 17" MODIFIED CITY STANDARD BASE

CONFORMED SET

HDR ENGINEERING, INC.
99 HIGH STREET, SUITE 2300
BOSTON, MASSACHUSETTS 02110-2378
(617) 357-7700

PATRICK D. SINOMLAS ELECTRICAL No. 47966 REGISTERED PROFESSIONAL ENGINEER
COMMONWEALTH OF MASSACHUSETTS
8-5-22

Scale	AS NOTED			
Date	MAY, 2022			
Job No.				
Designed by	CDK			
Drawn by	CDK	0	CONFORMED SET	8/5/2022
Checked by	JAD	No.	Description	Date
Approved by	PGB	REVISIONS		

THE WORKS — CAMBRIDGE DEPARTMENT OF PUBLIC WORKS

Client	CITY OF CAMBRIDGE, MA	Sheet	E-1.01
Project	RIVER STREET INFRASTRUCTURE AND STREETSCAPE PROJECT	Total Sheets	381
Drawing	**STREET LIGHTING PLAN - 1**	File No.	

File: C:\PW\WORKING\EAST\01\D0786396\I7113XXX_(LIGHTING PLANS).DWG Plotted: 8/23/2022 9:32:10 AM

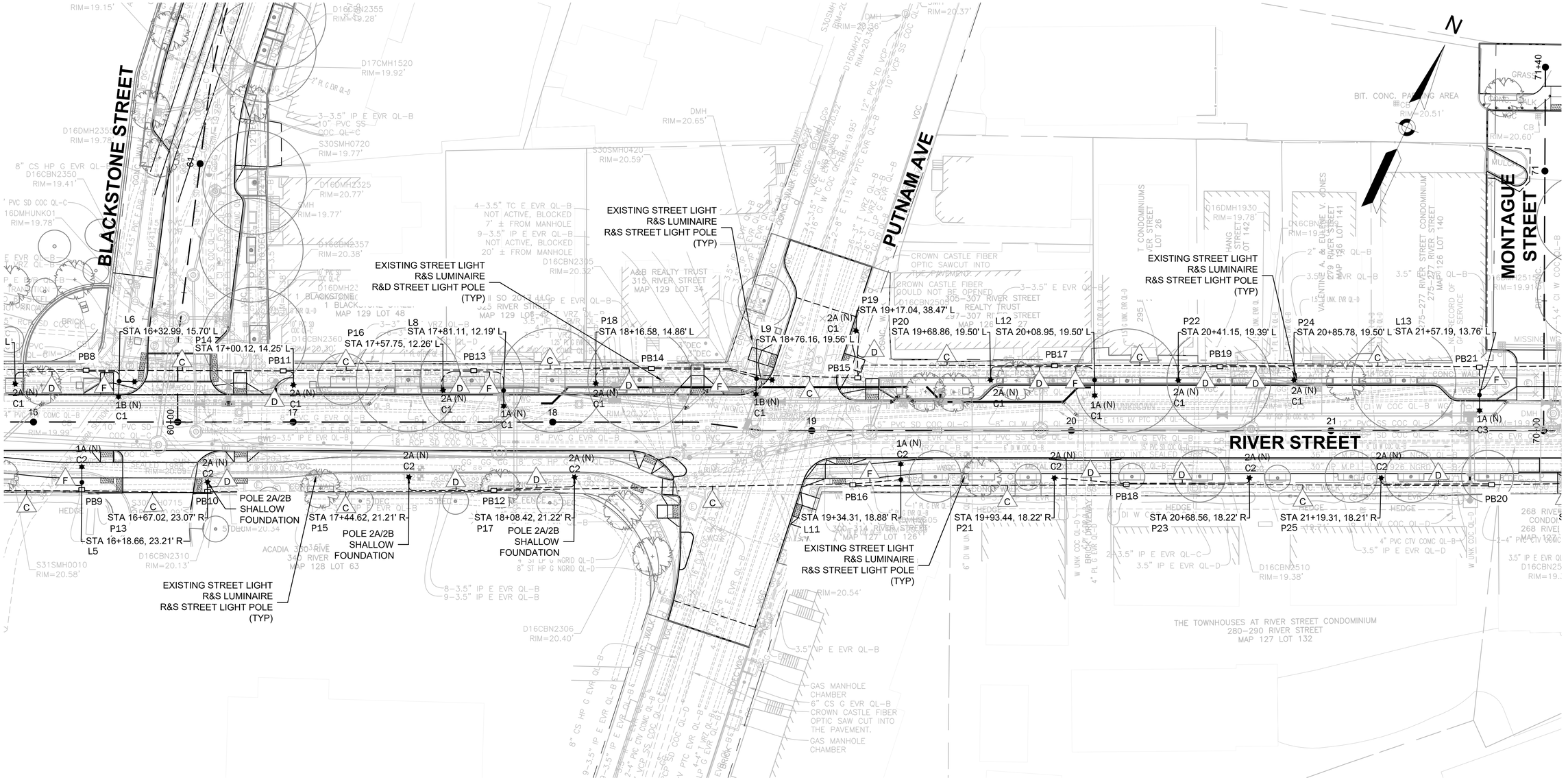

SEE SHEET E-1.01

SEE SHEET E-1.03

CONDUIT & CIRCUIT SCHEDULE

C
1 OF 4 IN PLASTIC CONDUIT
3 OF 1/0 AWG CONDUCTOR (LIGHTING)
1 OF 1/0 AWG CONDUCTOR (GROUND)
1 OF 4 IN PLASTIC CONDUIT (SPARE)

D
1 OF 2 IN PLASTIC CONDUIT
2 OF AWG NO. 10 CONDUCTOR (LIGHTING)
1 OF AWG NO. 10 CONDUCTOR (GROUND)

F
1 OF 2 IN PLASTIC CONDUIT
2 OF AWG NO. 10 CONDUCTOR (LIGHTING)
2 OF AWG NO. 10 CONDUCTOR (GROUND)
2 OF AWG NO. 10 CONDUCTOR (RECEPTACLE)

PLAN

0 20 50 100

SCALE: 1" = 20'

NOTES:

1. EXISTING COBRA LIGHT POLES, BASES, AND LUMINAIRES SEE DISPOSITION PLANS.
2. PROVIDE 3/4" X 8' COPPER GROUND ROD AT EACH NEW HANDHOLE. GROUND EACH POLE TO GROUND ROD.
3. SEE SHEET ED-1.02 FOR GENERAL ELECTRICAL DETAILS AND LIGHTING TYPES.
4. ALL LIGHT POLE LOCATIONS SHALL BE STAKED OUT IN THE FIELD FOR REVIEW AND APPROVAL BY ENGINEER PRIOR TO INSTALLATION OF FOUNDATION. MINIMUM CLEARANCE OF 2' FROM EDGE OF BIKE LANE
5. UNLESS STATED OTHERWISE, ALL CONDUIT SHALL BE ENCASED IN CONCRETE. SEE DETAIL SHEET ED-1.01.
6. SEE CIVIL DRAWINGS FOR PROPOSED SEWER, DRAIN, WATER, AND OTHER UTILITY COORDINATION WORK. SUBSURFACE DESIGN SHOWN FOR REFERENCE ONLY.
7. LUMINAIRES IN RESIDENTIAL AREAS TO HAVE HOUSE SIDE SHIELD INSTALLED

LIGHTING FIXTURE LEGEND:

- TYPE 1A - DECORATIVE PENDANT LIGHTING FIXTURE SINGLE POLE MOUNTED W/ DUPLEX GFI RECEPTACLES
- TYPE 1B - DECORATIVE PENDANT LIGHTING FIXTURE DOUBLE POLE MOUNTED W/ DUPLEX GFI RECEPTACLES
- TYPE 2A - LED ACORN PEDESTRIAN LIGHT FIXTURE WITH 17" MODIFIED CITY STANDARD BASE

CONFORMED SET

HDR ENGINEERING, INC.
99 HIGH STREET, SUITE 2300
BOSTON, MASSACHUSETTS 02110–2378
(617) 357–7700

COMMONWEALTH OF MASSACHUSETTS
PATRICK G. BROWN
REGISTERED
No. 47996
PROFESSIONAL ENGINEER
8-5-22

Scale	AS NOTED			
Date	MAY, 2022			
Job No.				
Designed by	CDK			
Drawn by	CDK	0	CONFORMED SET	8/5/2022
Checked by	JAD	No.	Description	Date
Approved by	PGB	REVISIONS		

THE WORKS — CAMBRIDGE DEPARTMENT OF PUBLIC WORKS

Client	CITY OF CAMBRIDGE, MA	Sheet	E-1.02
Project	RIVER STREET INFRASTRUCTURE AND STREETSCAPE PROJECT	Total Sheets	381
Drawing	**STREET LIGHTING PLAN - 2**	File No.	

File: C:\PW\WORKING\EAST\01\D0786396\I7113XXX_(LIGHTING PLANS).DWG Plotted: 8/23/2022 9:32:26 AM

SEE SHEET E-1.02

SEE SHEET E-1.04

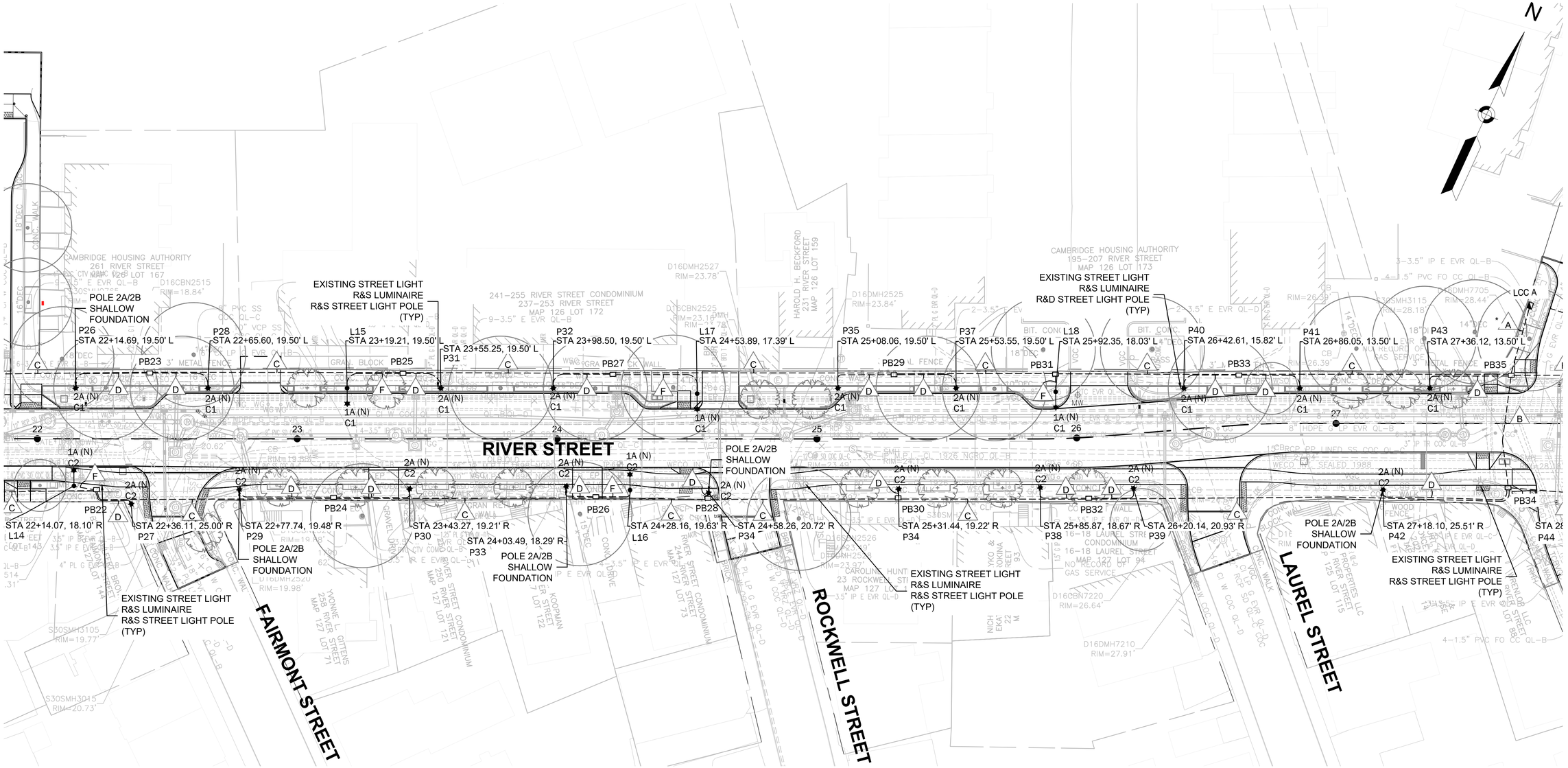

CONDUIT & CIRCUIT SCHEDULE

A	2 OF 4 IN PLASTIC CONDUIT 3 OF AWG NO. 8 CONDUCTOR (TUBMAN SQ CKT) 12 OF 6 AWG CONDUCTOR (LIGHTING) 2 OF 6 AWG CONDUCTOR (GROUND) 1 OF 4 IN PLASTIC CONDUIT (SPARE)	
B	2 OF 4 IN PLASTIC CONDUIT 3 OF AWG NO. 8 CONDUCTOR (TUBMAN SQ CKT) 6 OF 1/0 AWG CONDUCTOR (LIGHTING) 2 OF 1/0 AWG CONDUCTOR (GROUND) 1 OF 4 IN PLASTIC CONDUIT (SPARE)	
C	1 OF 4 IN PLASTIC CONDUIT 3 OF 1/0 AWG CONDUCTOR (LIGHTING) 1 OF 1/0 AWG CONDUCTOR (GROUND) 1 OF 4 IN PLASTIC CONDUIT (SPARE)	
D	1 OF 2 IN PLASTIC CONDUIT 2 OF AWG NO. 10 CONDUCTOR (LIGHTING) 1 OF AWG NO. 10 CONDUCTOR (GROUND)	
F	1 OF 2 IN PLASTIC CONDUIT 2 OF AWG NO. 10 CONDUCTOR (LIGHTING) 2 OF AWG NO. 10 CONDUCTOR (GROUND) 2 OF AWG NO. 10 CONDUCTOR (RECEPTACLE)	

PLAN

0 20 50 100

SCALE: 1" = 20'

NOTES:

1. EXISTING COBRA LIGHT POLES, BASES, AND LUMINAIRES SEE DISPOSITION PLANS.
2. PROVIDE 3/4" X 8' COPPER GROUND ROD AT EACH NEW HANDHOLE. GROUND EACH POLE TO GROUND ROD.
3. SEE SHEET ED-1.02 FOR GENERAL ELECTRICAL DETAILS AND LIGHTING TYPES.
4. ALL LIGHT POLE LOCATIONS SHALL BE STAKED OUT IN THE FIELD FOR REVIEW AND APPROVAL BY ENGINEER PRIOR TO INSTALLATION OF FOUNDATION. MINIMUM CLEARANCE OF 2' FROM EDGE OF BIKE LANE
5. UNLESS STATED OTHERWISE, ALL CONDUIT SHALL BE ENCASED IN CONCRETE. SEE DETAIL SHEET ED-1.01.
6. SEE CIVIL DRAWINGS FOR PROPOSED SEWER, DRAIN, WATER, AND OTHER UTILITY COORDINATION WORK. SUBSURFACE DESIGN SHOWN FOR REFERENCE ONLY.
7. LUMINAIRES IN RESIDENTIAL AREAS TO HAVE HOUSE SIDE SHIELD INSTALLED

LIGHTING FIXTURE LEGEND:

- TYPE 1A - DECORATIVE PENDANT LIGHTING FIXTURE SINGLE POLE MOUNTED W/ DUPLEX GFI RECEPTACLES
- TYPE 1B - DECORATIVE PENDANT LIGHTING FIXTURE DOUBLE POLE MOUNTED W/ DUPLEX GFI RECEPTACLES
- TYPE 2A - LED ACORN PEDESTRIAN LIGHT FIXTURE WITH 17" MODIFIED CITY STANDARD BASE

CONFORMED SET

HDR ENGINEERING, INC.
99 HIGH STREET, SUITE 2300
BOSTON, MASSACHUSETTS 02110–2378
(617) 357–7700

PATRICK D. BROWN REGISTERED ELECTRICAL ENGINEER 8-5-22

Scale	AS NOTED			
Date	MAY, 2022			
Job No.				
Designed by	CDK			
Drawn by	CDK	0	CONFORMED SET	8/5/2022
Checked by	JAD	No.	Description	Date
Approved by	PGB	REVISIONS		

THE WORKS — CAMBRIDGE DEPARTMENT OF PUBLIC WORKS

Client	CITY OF CAMBRIDGE, MA	Sheet	E-1.03
Project	RIVER STREET INFRASTRUCTURE AND STREETSCAPE PROJECT	Total Sheets	381
Drawing	**STREET LIGHTING PLAN - 3**	File No.	

File: C:\PW\WORKING\EAST01\D0786396\7113XXX_(LIGHTING PLANS).DWG Plotted: 8/23/2022 9:32:42 AM

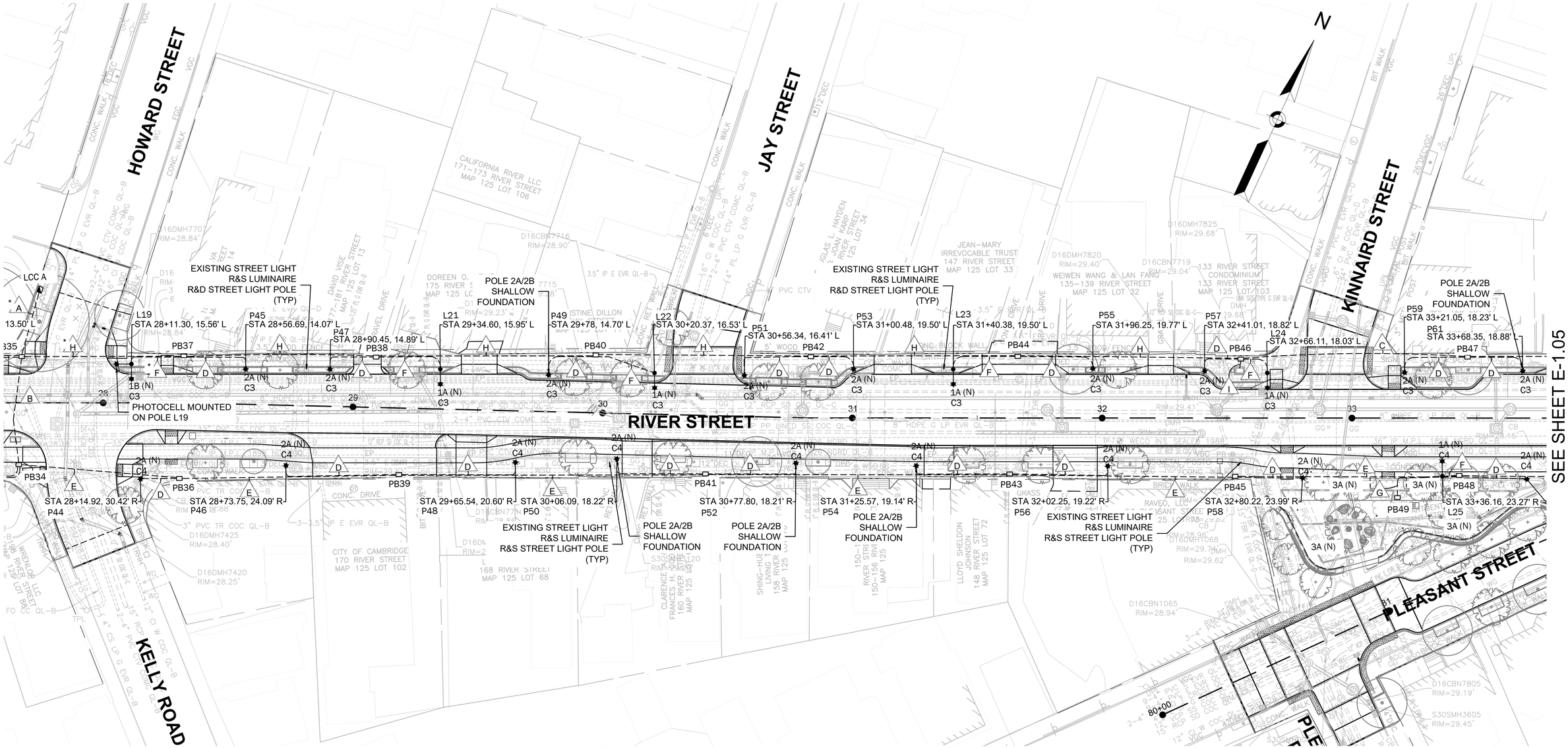

CONDUIT & CIRCUIT SCHEDULE

A
- 2 OF 4 IN PLASTIC CONDUIT
- 3 OF AWG NO. 8 CONDUCTOR (TUBMAN SQ CKT)
- 2 OF AWG NO. 8 CONDUCTOR (IRRIGATION CKT)
- 12 OF 6 AWG CONDUCTOR (LIGHTING)
- 2 OF 6 AWG CONDUCTOR (GROUND)
- 1 OF 4 IN PLASTIC CONDUIT (SPARE)

B
- 2 OF 4 IN PLASTIC CONDUIT
- 3 OF AWG NO. 8 CONDUCTOR (TUBMAN SQ CKT)
- 6 OF 1/0 AWG CONDUCTOR (LIGHTING)
- 2 OF 1/0 AWG CONDUCTOR (GROUND)
- 1 OF 4 IN PLASTIC CONDUIT (SPARE)

* INCLUDE 1 OF 3 AWG O. 12 CABLE (PHOTOCELL)

C
- 1 OF 4 IN PLASTIC CONDUIT
- 3 OF 1/0 AWG CONDUCTOR (LIGHTING)
- 1 OF 1/0 AWG CONDUCTOR (GROUND)
- 1 OF 4 IN PLASTIC CONDUIT (SPARE)

D
- 1 OF 2 IN PLASTIC CONDUIT
- 2 OF AWG NO. 10 CONDUCTOR (LIGHTING)
- 1 OF AWG NO. 10 CONDUCTOR (GROUND)

F
- 1 OF 2 IN PLASTIC CONDUIT
- 2 OF AWG NO. 10 CONDUCTOR (LIGHTING)
- 2 OF AWG NO. 10 CONDUCTOR (GROUND)
- 2 OF AWG NO. 10 CONDUCTOR (RECEPTACLE)

E
- 1 OF 4 IN PLASTIC CONDUIT
- 3 OF AWG NO. 8 CONDUCTOR (TUBMAN SQ CKT)
- 3 OF 1/0 AWG CONDUCTOR (LIGHTING)
- 1 OF 1/0 AWG CONDUCTOR (GROUND)
- 1 OF 4 IN PLASTIC CONDUIT (SPARE)

G
- 1 OF 2 IN PLASTIC CONDUIT
- 2 OF AWG NO. 8 CONDUCTOR (TUBMAN SQ CKT)
- 1 OF AWG NO. 8 CONDUCTOR (GROUND)

H
- 1 OF 4 IN PLASTIC CONDUIT
- 2 OF AWG NO. 8 CONDUCTOR (IRRIGATION CKT)
- 3 OF 1/0 AWG CONDUCTOR (LIGHTING)
- 1 OF 1/0 AWG CONDUCTOR (GROUND)
- 1 OF 4 IN PLASTIC CONDUIT (SPARE)

I
- 1 OF 2 IN PLASTIC CONDUIT
- 2 OF AWG NO. 8 CONDUCTOR (IRRIGATION CKT)
- 1 OF AWG NO. 8 CONDUCTOR (GROUND)

TUBMAN SQUARE NOTES:

1. EC TO COORDINATE AND VERIFY DRIVER SIZE REQUIRED PRIOR TO ORDERING.
2. EC TO VERIFY AND SPECIFY SIZE AND LENGTH OF Q-WIRE REQUIRED
3. EC TO VERIFY LOCATION OF POWER SUPPLY IN Q VAULTS (Q-VAULT-5-BZ-LR) WITH LANDSCAPE ARCHITECT PRIOR TO FINAL INSTALLATION.
4. CONNECTION TYPE, CONNECTOR WIRE, END CAPS, AND END FEEDS TO BE COORDINATED BY EC, PRIOR TO ORDERING
5. EC TO COORDINATE LENGTHS PRIOR TO ORDERING.

NOTES:

1. EXISTING COBRA LIGHT POLES, BASES, AND LUMINAIRES SEE DISPOSITION PLANS.
2. PROVIDE 3/4" X 8' COPPER GROUND ROD AT EACH NEW HANDHOLE. GROUND EACH POLE TO GROUND ROD.
3. SEE SHEET ED-1.02 FOR GENERAL ELECTRICAL DETAILS AND LIGHTING TYPES.
4. ALL LIGHT POLE LOCATIONS SHALL BE STAKED OUT IN THE FIELD FOR REVIEW AND APPROVAL BY ENGINEER PRIOR TO INSTALLATION OF FOUNDATION. MINIMUM CLEARANCE OF 2' FROM EDGE OF BIKE LANE
5. UNLESS STATED OTHERWISE, ALL CONDUIT SHALL BE ENCASED IN CONCRETE. SEE DETAIL SHEET ED-1.01.
6. SEE CIVIL DRAWINGS FOR PROPOSED SEWER, DRAIN, WATER, AND OTHER UTILITY COORDINATION WORK. SUBSURFACE DESIGN SHOWN FOR REFERENCE ONLY.
7. LUMINAIRES IN RESIDENTIAL AREAS TO HAVE HOUSE SIDE SHIELD INSTALLED

PLAN

0 20 50 100

SCALE: 1" = 20'

LIGHTING FIXTURE LEGEND:

- TYPE 1A - DECORATIVE PENDANT LIGHTING FIXTURE SINGLE POLE MOUNTED W/ DUPLEX GFI RECEPTACLES
- TYPE 1B - DECORATIVE PENDANT LIGHTING FIXTURE DOUBLE POLE MOUNTED W/ DUPLEX GFI RECEPTACLES
- TYPE 2A - LED ACORN PEDESTRIAN LIGHT FIXTURE WITH 17" MODIFIED CITY STANDARD BASE
- TYPE 3A - LED QTRAN "ZALA SW" STRIP FOR INTEGRATED BENCH LIGHTING

CONFORMED SET

HDR ENGINEERING, INC.
99 HIGH STREET, SUITE 2300
BOSTON, MASSACHUSETTS 02110-2378
(617) 357-7700

COMMONWEALTH OF MASSACHUSETTS PATRICK G. BROUILLES ELECTRICAL 052-33867 REGISTERED PROFESSIONAL ENGINEER
8-5-22

Scale	AS NOTED			
Date	MAY, 2022			
Job No.				
Designed by	CDK			
Drawn by	CDK	0	CONFORMED SET	8/5/2022
Checked by	JAD	No.	Description	Date
Approved by	PGB	REVISIONS		

THE WORKS — CAMBRIDGE DEPARTMENT OF PUBLIC WORKS

Client	CITY OF CAMBRIDGE, MA	Sheet	E-1.04
Project	RIVER STREET INFRASTRUCTURE AND STREETSCAPE PROJECT	Total Sheets	381
Drawing	**STREET LIGHTING PLAN - 4**	File No.	

File: C:\PW\WORKING\EAST01\D0786396\7113XXX_(LIGHTING PLANS).DWG Plotted: 8/23/2022 9:33:00 AM

SEE SHEET E-1.04

SEE SHEET E-1.06

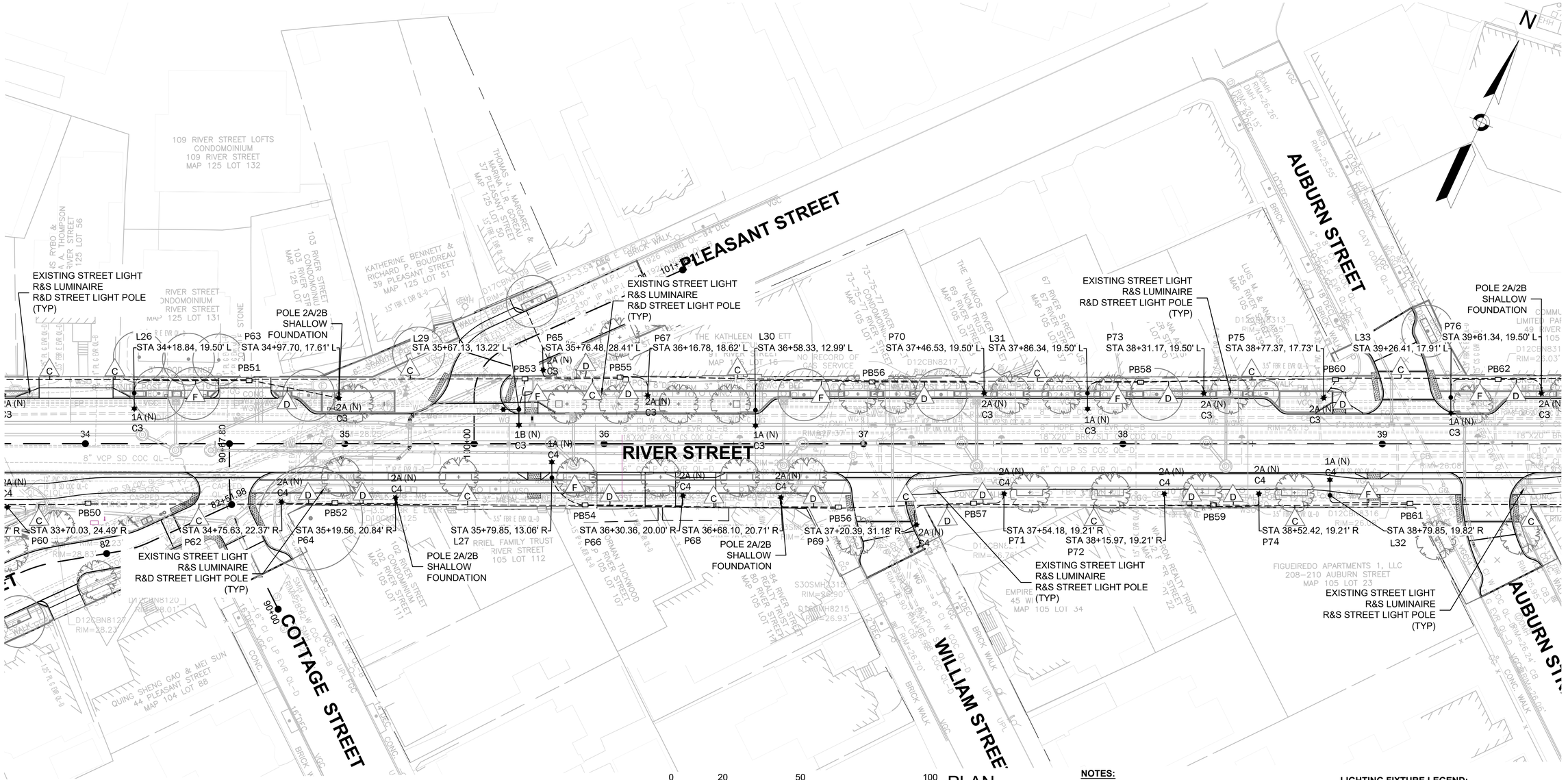

CONDUIT & CIRCUIT SCHEDULE

C	1 OF 4 IN PLASTIC CONDUIT	
	3 OF 1/0 AWG CONDUCTOR	(LIGHTING)
	1 OF 1/0 AWG CONDUCTOR	(GROUND)
	1 OF 3 IN PLASTIC CONDUIT	(SPARE)
D	1 OF 2 IN PLASTIC CONDUIT	
	2 OF AWG NO. 10 CONDUCTOR	(LIGHTING)
	1 OF AWG NO. 10 CONDUCTOR	(GROUND)
F	1 OF 2 IN PLASTIC CONDUIT	
	2 OF AWG NO. 10 CONDUCTOR	(LIGHTING)
	2 OF AWG NO. 10 CONDUCTOR	(GROUND)
	2 OF AWG NO. 10 CONDUCTOR	(RECEPTACLE)

NOTES:

1. EXISTING COBRA LIGHT POLES, BASES, AND LUMINAIRES SEE DISPOSITION PLANS.
2. PROVIDE 3/4" X 8' COPPER GROUND ROD AT EACH NEW HANDHOLE. GROUND EACH POLE TO GROUND ROD.
3. SEE SHEET ED-1.02 FOR GENERAL ELECTRICAL DETAILS AND LIGHTING TYPES.
4. ALL LIGHT POLE LOCATIONS SHALL BE STAKED OUT IN THE FIELD FOR REVIEW AND APPROVAL BY ENGINEER PRIOR TO INSTALLATION OF FOUNDATION. MINIMUM CLEARANCE OF 2' FROM EDGE OF BIKE LANE
5. UNLESS STATED OTHERWISE, ALL CONDUIT SHALL BE ENCASED IN CONCRETE. SEE DETAIL SHEET ED-1.01.
6. SEE CIVIL DRAWINGS FOR PROPOSED SEWER, DRAIN, WATER, AND OTHER UTILITY COORDINATION WORK. SUBSURFACE DESIGN SHOWN FOR REFERENCE ONLY.
7. LUMINAIRES IN RESIDENTIAL AREAS TO HAVE HOUSE SIDE SHIELD INSTALLED

LIGHTING FIXTURE LEGEND:

- TYPE 1A - DECORATIVE PENDANT LIGHTING FIXTURE SINGLE POLE MOUNTED W/ DUPLEX GFI RECEPTACLES
- TYPE 1B - DECORATIVE PENDANT LIGHTING FIXTURE DOUBLE POLE MOUNTED W/ DUPLEX GFI RECEPTACLES
- TYPE 2A - LED ACORN PEDESTRIAN LIGHT FIXTURE WITH 17" MODIFIED CITY STANDARD BASE

CONFORMED SET

HDR ENGINEERING, INC.
99 HIGH STREET, SUITE 2300
BOSTON, MASSACHUSETTS 02110–2378
(617) 357–7700

PATRICK D. SHOALES ELECTRICAL No. 37966 REGISTERED PROFESSIONAL ENGINEER
8-5-22

Scale	AS NOTED			
Date	MAY, 2022			
Job No.				
Designed by	CDK			
Drawn by	CDK	0	CONFORMED SET	8/5/2022
Checked by	JAD	No.	Description	Date
Approved by	PGB	REVISIONS		

THE WORKS — CAMBRIDGE DEPARTMENT OF PUBLIC

Client: CITY OF CAMBRIDGE, MA

Project: RIVER STREET
INFRASTRUCTURE AND STREETSCAPE PROJECT

Drawing: **STREET LIGHTING PLAN - 5**

Sheet: E-1.05

Total Sheets: 381

File No.:

File: C:\PW\WORKING\EAST01\D0786396\7113XXX_(LIGHTING PLANS).DWG Plotted: 8/23/2022 9:33:16 AM

SEE SHEET E-1.05

SEE SHEET E-1.07

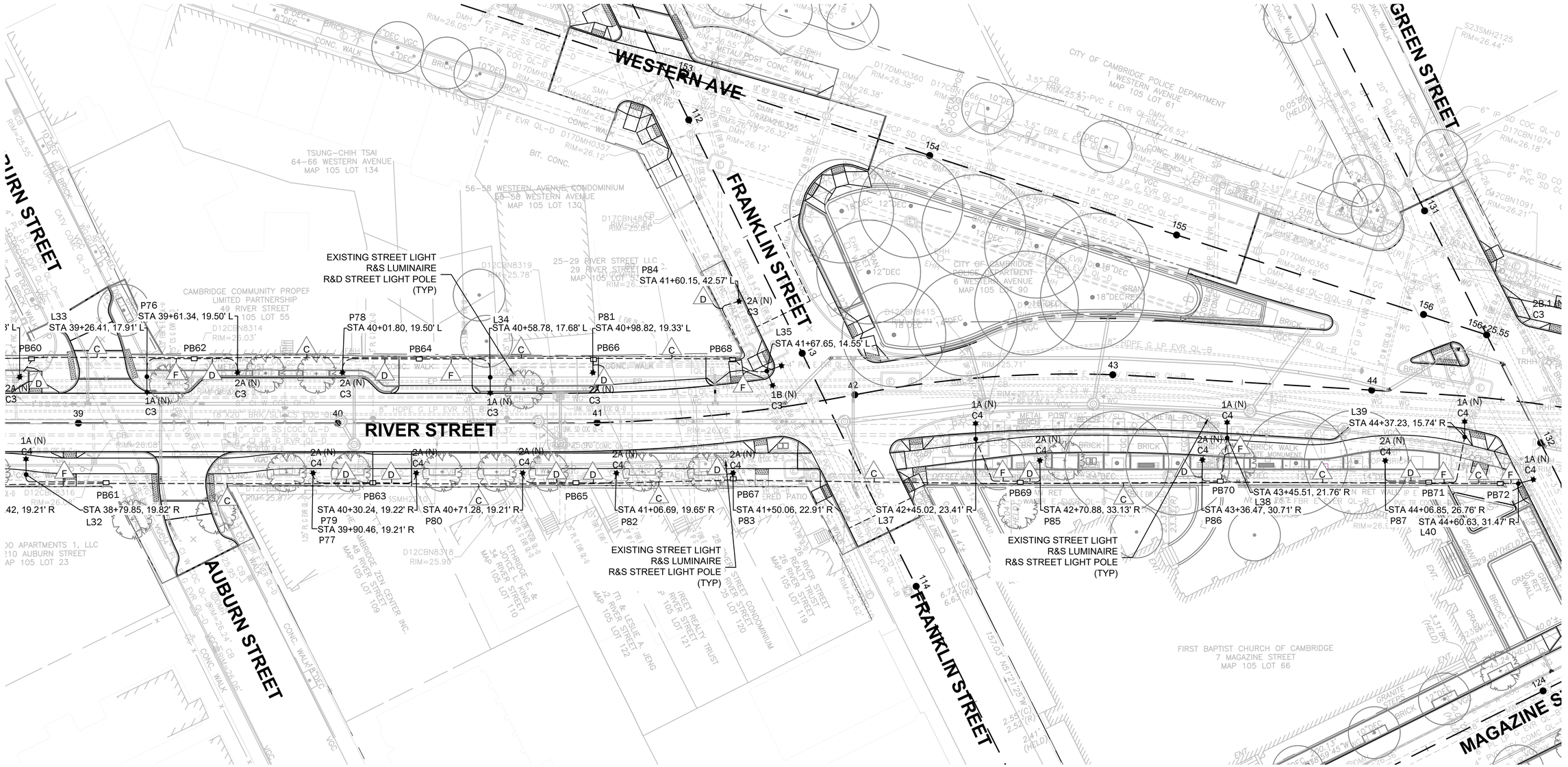

CONDUIT & CIRCUIT SCHEDULE

C	1 OF 4 IN PLASTIC CONDUIT	
	3 OF 1/0 AWG CONDUCTOR	(LIGHTING)
	1 OF 1/0 AWG CONDUCTOR	(GROUND)
	1 OF 4 IN PLASTIC CONDUIT	(SPARE)
D	1 OF 2 IN PLASTIC CONDUIT	
	2 OF AWG NO. 10 CONDUCTOR	(LIGHTING)
	1 OF AWG NO. 10 CONDUCTOR	(GROUND)
F	1 OF 2 IN PLASTIC CONDUIT	
	2 OF AWG NO. 10 CONDUCTOR	(LIGHTING)
	2 OF AWG NO. 10 CONDUCTOR	(GROUND)
	2 OF AWG NO. 10 CONDUCTOR	(RECEPTACLE)

PLAN

0 20 50 100

SCALE: 1" = 20'

NOTES:

1. EXISTING COBRA LIGHT POLES, BASES, AND LUMINAIRES SEE DISPOSITION PLANS.
2. PROVIDE 3/4" X 8' COPPER GROUND ROD AT EACH NEW HANDHOLE. GROUND EACH POLE TO GROUND ROD.
3. SEE SHEET ED-1.02 FOR GENERAL ELECTRICAL DETAILS AND LIGHTING TYPES.
4. ALL LIGHT POLE LOCATIONS SHALL BE STAKED OUT IN THE FIELD FOR REVIEW AND APPROVAL BY ENGINEER PRIOR TO INSTALLATION OF FOUNDATION. MINIMUM CLEARANCE OF 2' FROM EDGE OF BIKE LANE
5. UNLESS STATED OTHERWISE, ALL CONDUIT SHALL BE ENCASED IN CONCRETE. SEE DETAIL SHEET ED-1.01.
6. SEE CIVIL DRAWINGS FOR PROPOSED SEWER, DRAIN, WATER, AND OTHER UTILITY COORDINATION WORK. SUBSURFACE DESIGN SHOWN FOR REFERENCE ONLY.
7. LUMINAIRES IN RESIDENTIAL AREAS TO HAVE HOUSE SIDE SHIELD INSTALLED

LIGHTING FIXTURE LEGEND:

- TYPE 1A - DECORATIVE PENDANT LIGHTING FIXTURE SINGLE POLE MOUNTED W/ DUPLEX GFI RECEPTACLES
- TYPE 1B - DECORATIVE PENDANT LIGHTING FIXTURE DOUBLE POLE MOUNTED W/ DUPLEX GFI RECEPTACLES
- TYPE 2A - LED ACORN PEDESTRIAN LIGHT FIXTURE WITH 17" MODIFIED CITY STANDARD BASE

CONFORMED SET

HDR ENGINEERING, INC.
99 HIGH STREET, SUITE 2300
BOSTON, MASSACHUSETTS 02110-2378
(617) 357-7700

PATRICK D. BACHAS ELECTRICAL 24,241 REGISTERED PROFESSIONAL ENGINEER
8-5-22

Scale	AS NOTED			
Date	MAY, 2022			
Job No.				
Designed by	CDK			
Drawn by	CDK	0	CONFORMED SET	8/5/2022
Checked by	JAD	No.	Description	Date
Approved by	PGB	REVISIONS		

THE WORKS — CAMBRIDGE DEPARTMENT OF PUBLIC

Client	CITY OF CAMBRIDGE, MA
Project	RIVER STREET INFRASTRUCTURE AND STREETSCAPE PROJECT
Drawing	**STREET LIGHTING PLAN - 6**
Sheet	E-1.06
Total Sheets	381
File No.	

File: C:\PW\WORKING\EAST01\D07863961\7113XXX_(LIGHTING PLANS).DWG Plotted: 8/23/2022 9:33:29 AM

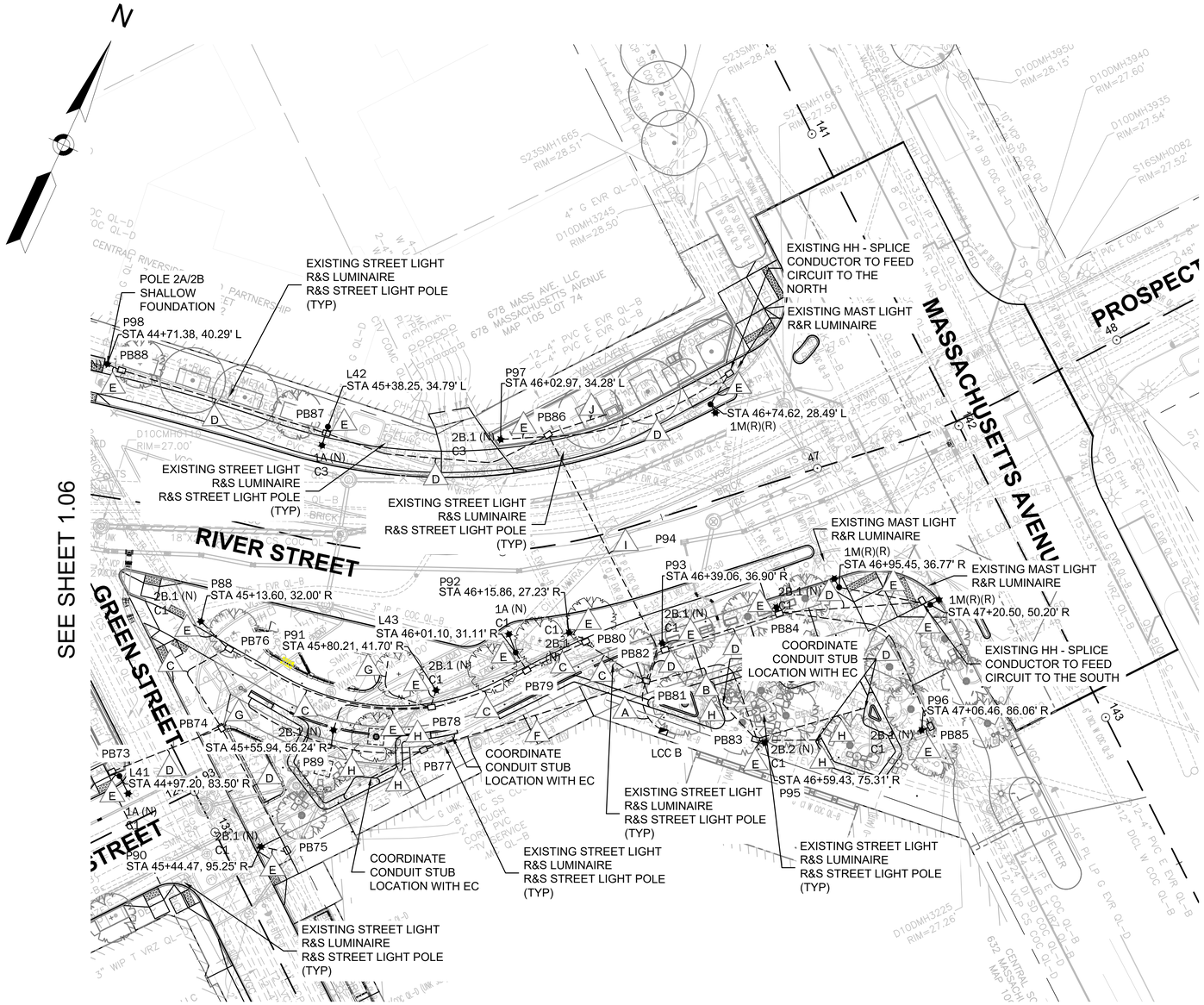

NOTES:

1. EXISTING COBRA LIGHT POLES, BASES, AND LUMINAIRES SEE DISPOSITION PLANS.
2. PROVIDE 3/4" X 8' COPPER GROUND ROD AT EACH NEW HANDHOLE. GROUND EACH POLE TO GROUND ROD.
3. SEE SHEET ED-1.02 FOR GENERAL ELECTRICAL DETAILS AND LIGHTING TYPES.
4. ALL LIGHT POLE LOCATIONS SHALL BE STAKED OUT IN THE FIELD FOR REVIEW AND APPROVAL BY ENGINEER PRIOR TO INSTALLATION OF FOUNDATION. MINIMUM CLEARANCE OF 2' FROM EDGE OF BIKE LANE
5. UNLESS STATED OTHERWISE, ALL CONDUIT SHALL BE ENCASED IN CONCRETE. SEE DETAIL SHEET ED-1.01.
6. SEE CIVIL DRAWINGS FOR PROPOSED SEWER, DRAIN, WATER, AND OTHER UTILITY COORDINATION WORK. SUBSURFACE DESIGN SHOWN FOR REFERENCE ONLY.
7. LUMINAIRES IN RESIDENTIAL AREAS TO HAVE HOUSE SIDE SHIELD INSTALLED
8. COORDINATE WITH EC TO MAINTAIN EXSITING LIGHTING NOT REMOVED IN THIS PROJECT. PROTECT IN PLACE OR EXTEND NEW CONDUCTOR TO NEW LCC AS NECESSARY TO MAINTAIN EXISTING CIRCUITS.
9. CONTRACTOR TO LOCATE CABINET ALIGNED WITH CENTER OF COLUMN OF HOLMES BUILDING.
10. POLE FOUNDATIONS IN PLAZA AREA TO BE SHALLOW CAST IN PLACE.

CONDUIT & CIRCUIT SCHEDULE

A
1 OF 4 IN PLASTIC CONDUIT
4 OF AWG NO. 8 CONDUCTOR (BUS TRANSIT)
6 OF AWG NO. 6 CONDUCTOR (RIBBON LIGHTING)
2 OF AWG NO. 8 CONDUCTOR (IRRIGATION)
3 OF AWG NO. 8 CONDUCTOR (LIGHTING)
1 OF AWG NO. 6 CONDUCTOR (GROUND)
2 OF 4 IN PLASTIC CONDUIT (SPARE)
4 OF AWG NO. 8 CONDUCTOR (RIBBON RECEPTACE)

B
1 OF 4 IN PLASTIC CONDUIT
3 OF AWG NO. 6 CONDUCTOR (RIBBON LIGHTING)
2 OF AWG NO. 8 CONDUCTOR (LIGHTING)
1 OF AWG NO. 6 CONDUCTOR (GROUND)
2 OF AWG NO. 8 CONDUCTOR (RIBBON RECEPTACLE)

C
1 OF 4 IN PLASTIC CONDUIT
2 OF AWG NO. 8 CONDUCTOR (BUS TRANSIT)
3 OF AWG NO. 8 CONDUCTOR (LIGHTING)
1 OF AWG NO. 8 CONDUCTOR (GROUND)

D
1 OF 4 IN PLASTIC CONDUIT
3 OF AWG NO. 8 CONDUCTOR (LIGHTING)
1 OF AWG NO. 8 CONDUCTOR (GROUND)

E
1 OF 2 IN PLASTIC CONDUIT
2 OF AWG NO. 8 CONDUCTOR (LIGHTING)
1 OF AWG NO. 8 CONDUCTOR (GROUND)
2 OF AWG NO. 8 CONDUCTOR (RECEPTACLE)

F
1 OF 4 IN PLASTIC CONDUIT
3 OF AWG NO. 6 CONDUCTOR (RIBBON LIGHTING)
1 OF AWG NO. 6 CONDUCTOR (GROUND)
2 OF AWG NO. 8 CONDUCTOR (RIBBON RECEPTACLE)

G
1 OF 2 IN PLASTIC CONDUIT
2 OF AWG NO. 8 CONDUCTOR (BUS TRANSIT)
1 OF AWG NO. 8 CONDUCTOR (GROUND)

H
1 OF 2 IN PLASTIC CONDUIT
3 OF AWG NO. 6 CONDUCTOR (RIBBON LIGHTING)
1 OF AWG NO. 6 CONDUCTOR (GROUND)
2 OF AWG NO. 8 CONDUCTOR (RIBBON RECEPTACLE)

I
1 OF 2 IN PLASTIC CONDUIT
3 OF AWG NO. 8 CONDUCTOR (LIGHTING)
2 OF AWG NO. 8 CONDUCTOR (IRRIGATION)
1 OF AWG NO. 8 CONDUCTOR (GROUND)

J
1 OF 2 IN PLASTIC CONDUIT
2 OF AWG NO. 8 CONDUCTOR (IRRIGATION)
1 OF AWG NO. 8 CONDUCTOR (GROUND)

PLAN
0 20 50 100
SCALE: 1" = 20'

LIGHTING FIXTURE LEGEND:

- TYPE 1A - DECORATIVE PENDANT LIGHTING FIXTURE SINGLE POLE MOUNTED
- TYPE 1M - HIGH MAST EXISTING LUMINAIRE
- TYPE 2B.1 - LED SELUX PEDESTRIAN LIGHT FIXTURE WITH 14" STEEL ROUND POLE, TYPE IV
- TYPE 2B.2 - LED SELUX PEDESTRIAN LIGHT FIXTURE WITH 14" STEEL ROUND POLE, TYPE II

CONFORMED SET

HDR ENGINEERING, INC.
99 HIGH STREET, SUITE 2300
BOSTON, MASSACHUSETTS 02110-2378
(617) 357-7700

PATRICK G. SNOWLAKE — ELECTRICAL — COMMONWEALTH OF MASSACHUSETTS — REGISTERED PROFESSIONAL ENGINEER
8-5-22

Scale	AS NOTED			
Date	MAY, 2022			
Job No.				
Designed by	CDK			
Drawn by	CDK	0	CONFORMED SET	8/5/2022
Checked by	JAD	No.	Description	Date
Approved by	PGB	REVISIONS		

THE WORKS — CAMBRIDGE DEPARTMENT OF PUBLIC WORKS

Client	CITY OF CAMBRIDGE, MA	Sheet	E-1.07
Project	RIVER STREET INFRASTRUCTURE AND STREETSCAPE PROJECT	Total Sheets	381
Drawing	**STREET LIGHTING PLAN - 7**	File No.	

File: C:\PW\WORKING\EAST01\D0786396\I7113XXX_(LIGHTING PLANS).DWG Plotted: 10/18/2022 11:39:54 AM

SEE SHEET E-1.06

RIVER STREET

GREEN STREET

STREET

PB88 (N)
EXISTING STREET LIGHT R&S LUMINAIRE R&S STREET LIGHT POLE (TYP)
L42 STA 45+38.25, 34.79' L
PB87
1A (N) C3
EXISTING STREET LIGHT R&S LUMINAIRE R&S STREET LIGHT POLE (TYP)
P97 STA 46+02.97, 34.28' L
PB86
2B.1 (N) C3
EXISTING STREET LIGHT R&S LUMINAIRE R&S STREET LIGHT POLE (TYP)
EXISTING MAST LIGHT R&R LUMINAIRE
STA 46+74.62, 28.49' L 1M(R)(R)
P94
P88 STA 45+13.60, 32.00' R
2B.1 (N) C1
L43 STA 46+01.10, 31.11' R
P91 STA 45+80.21, 41.70' R
PB76
P92 STA 46+15.86, 27.23' R
1A (N) C1
2B.1 (N) C1
PB80
PB82
P93 STA 46+39.06, 36.90' R
2B.1 (N) C1
PB84
EXISTING MAST LIGHT R&R LUMINAIRE
1M(R)(R) STA 46+95.45, 36.77'
EXISTING STREET LIGHT R&S LUMINAIRE R&S STREET LIGHT POLE (TYP)
2B.1 (N) C1
PB79
PB81
PB74
PB78
2B.1 (N) STA 45+55.94, 56.24' R
P89
PB77
EXISTING STREET LIGHT R&S LUMINAIRE R&S STREET LIGHT POLE (TYP)
LCC B
PB83
2B.2 (N) C1
STA 46+59.43, 75.31' R
P95
PB73
L41 STA 44+97.20, 83.50' R
1A (N) C1
2B.1 (N) C1
P90 STA 45+44.47, 95.25' R
PB75
EXISTING STREET LIGHT R&S LUMINAIRE R&S STREET LIGHT POLE (TYP)
P96 STA 4
PB8
2B.1 (N) C1

PLAN

0 10 20 30 40

SCALE: 1" = 10'

Luminaire Orientation (º)

No.	Orientation	No.	Orientation
L41	128.90	P92	136.40
L42	170.54	P93	135.79
L43	326.31	P94	117.60
P88	75.49	P95	354.58
P89	128.66	P96	209.61
P90	38.97	P97	149.10
P91	61.96	P98	169.35

CONDUIT & CIRCUIT SCHEDULE

A
1 OF 4 IN PLASTIC CONDUIT
2 OF AWG NO. 8 CONDUCTOR (BUS TRANSIT)
6 OF AWG NO. 6 CONDUCTOR (RIBBON LIGHTING)
2 OF AWG NO. 8 CONDUCTOR (IRRIGATION)
3 OF AWG NO. 8 CONDUCTOR (LIGHTING)
1 OF AWG NO. 6 CONDUCTOR (GROUND)
2 OF 4 IN PLASTIC CONDUIT (SPARE)
4 OF AWG NO. 8 CONDUCTOR (RECEPTACLE)

B
1 OF 4 IN PLASTIC CONDUIT
3 OF AWG NO. 6 CONDUCTOR (RIBBON LIGHTING)
2 OF AWG NO. 8 CONDUCTOR (LIGHTING)
1 OF AWG NO. 6 CONDUCTOR (GROUND)
2 OF AWG NO. 8 CONDUCTOR (RECEPTACLES)

C
1 OF 4 IN PLASTIC CONDUIT
2 OF AWG NO. 6 CONDUCTOR (BUS TRANSIT)
3 OF AWG NO. 8 CONDUCTOR (LIGHTING)
1 OF AWG NO. 8 CONDUCTOR (GROUND)

D
1 OF 4 IN PLASTIC CONDUIT
3 OF AWG NO. 8 CONDUCTOR (LIGHTING)
1 OF AWG NO. 8 CONDUCTOR (GROUND)

E
1 OF 2 IN PLASTIC CONDUIT
2 OF AWG NO. 8 CONDUCTOR (LIGHTING)
1 OF AWG NO. 8 CONDUCTOR (GROUND)
2 OF AWG NO. 8 CONDUCTOR (RECEPTACLE)

F
1 OF 4 IN PLASTIC CONDUIT
3 OF AWG NO. 6 CONDUCTOR (LIGHTING)
1 OF AWG NO. 6 CONDUCTOR (GROUND)
2 OF AWG NO. 8 CONDUCTOR (RECEPTACLES)

G
1 OF 2 IN PLASTIC CONDUIT
2 OF AWG NO. 8 CONDUCTOR (BUS TRANSIT)
1 OF AWG NO. 8 CONDUCTOR (GROUND)

H
1 OF 2 IN PLASTIC CONDUIT
3 OF AWG NO. 6 CONDUCTOR (RIBBION LIGHTING)
1 OF AWG NO. 6 CONDUCTOR (GROUND)
2 OF AWG NO. 8 CONDUCTOR (RECEPTACLE)

I
1 OF 2 IN PLASTIC CONDUIT
3 OF AWG NO. 8 CONDUCTOR (LIGHTING)
2 OF AWG NO. 8 CONDUCTOR (IRRIGATION)
1 OF AWG NO. 8 CONDUCTOR (GROUND)

J
1 OF 2 IN PLASTIC CONDUIT
2 OF AWG NO. 8 CONDUCTOR (IRRIGATION)
1 OF AWG NO. 8 CONDUCTOR (GROUND)

NOTES:

1. EXISTING COBRA LIGHT POLES, BASES, AND LUMINAIRES SEE DISPOSITION PLANS.
2. PROVIDE 3/4" X 8' COPPER GROUND ROD AT EACH NEW HANDHOLE. GROUND EACH POLE TO GROUND ROD.
3. SEE SHEET ED-1.02 FOR GENERAL ELECTRICAL DETAILS AND LIGHTING TYPES.
4. ALL LIGHT POLE LOCATIONS SHALL BE STAKED OUT IN THE FIELD FOR REVIEW AND APPROVAL BY ENGINEER PRIOR TO INSTALLATION OF FOUNDATION. MINIMUM CLEARANCE OF 2' FROM EDGE OF BIKE LANE
5. UNLESS STATED OTHERWISE, ALL CONDUIT SHALL BE ENCASED IN CONCRETE. SEE DETAIL SHEET ED-1.01.
6. SEE CIVIL DRAWINGS FOR PROPOSED SEWER, DRAIN, WATER, AND OTHER UTILITY COORDINATION WORK. SUBSURFACE DESIGN SHOWN FOR REFERENCE ONLY.
7. LUMINAIRES IN RESIDENTIAL AREAS TO HAVE HOUSE SIDE SHIELD INSTALLED
8. COORDINATE WITH EC TO MAINTAIN EXSITING LIGHTING NOT REMOVED IN THIS PROJECT. PROTECT IN PLACE OR EXTEND NEW CONDUCTOR TO NEW LCC AS NECESSARY TO MAINTAIN EXISTING CIRCUITS.
9. CONTRACTOR TO LOCATE CABINET ALIGNED WITH CENTER OF COLUMN OF HOLMES BUILDING.
10. POLE FOUNDATIONS IN PLAZA AREA TO BE SHALLOW CAST IN PLACE.

LIGHTING FIXTURE LEGEND:

- TYPE 1A - DECORATIVE PENDANT LIGHTING FIXTURE SINGLE POLE MOUNTED
- TYPE 1M - HIGH MAST EXISTING LUMINAIRE
- TYPE 2B.1 - LED SELUX PEDESTRIAN LIGHT FIXTURE WITH 14" STEEL ROUND POLE, TYPE IV
- TYPE 2B.2 - LED SELUX PEDESTRIAN LIGHT FIXTURE WITH 14" STEEL ROUND POLE, TYPE II

CONFORMED SET

HDR ENGINEERING, INC.
99 HIGH STREET, SUITE 2300
BOSTON, MASSACHUSETTS 02110–2378
(617) 357–7700

COMMONWEALTH OF MASSACHUSETTS — PATRICK G. BROMLEY — ELECTRICAL — No. 47982 — REGISTERED PROFESSIONAL ENGINEER
8-5-22

Scale	AS NOTED			
Date	MAY, 2022			
Job No.				
Designed by	CDK			
Drawn by	CDK	0	CONFORMED SET	8/5/2022
Checked by	JAD	No.	Description	Date
Approved by	PGB	REVISIONS		

THE WORKS — CAMBRIDGE DEPARTMENT OF PUBLIC WORKS

Client	CITY OF CAMBRIDGE, MA
Project	RIVER STREET INFRASTRUCTURE AND STREETSCAPE PROJECT
Drawing	STREET LIGHTING PLAN - 8
Sheet	E-1.08
Total Sheets	381
File No.	

File: C:\PWWORKING\EAST\D1D0786396\7113XXX_(LIGHTING PLANS).DWG Plotted: 8/23/2022 9:34:02 AM

LEGEND

1A (N) C1	POLE MOUNTED LIGHTING FIXTURE "1A" OR "1B" (N) NEW PROPOSED LIGHT TO REMAIN (E) EXISTING LIGHT FIXTURE TO REMAIN (D&R) EXISTING LIGHT TO BE DISCONNECTED AND REMOVE C1 - CIRCUIT NUMBER
2A (N) C1	POLE MOUNTED LIGHTING FIXTURE 2A,2B OR 2C C1 - CIRCUIT NUMBER
	LIGHTING HANDHOLE PRECAST 12"Wx24"Lx20"D W/ 3/4"x8' GROUND ROD & #4AWG GROUND WIRE
'LCC'	LIGHTING CONTROL CABINET 'LCC'
A	UNDERGROUND CONDUIT & CONDUCTOR TYPE

River St

MATERIAL	TOTAL	UNIT
ITEM 16135.1 - 2 INCH ELECTRIC CONDUIT CONCRETE ENCASED (LIGHTING)	4,100	LNFT
ITEM 16135.2 - 4 INCH ELECTRIC CONDUIT CONCRETE ENCASED (LIGHTING)	19,000	LNFT
ITEM 16135.3 - ELECTRICAL HANDHOLE (LIGHTING)	88	EACH
ITEM 16135.4 - LIGHT STANDARD FOUNDATION (STANDARD PRECAST)	111	EACH
ITEM 16135.5 - SHALLOW FOUNDATION (SHALLOW CAST IN PLACE)	21	EACH
ITEM 16135.6 - SELUX FOUNDATION (SHALLOW CAST IN PLACE)	9	EACH
ITEM 16135.7 - GROUND ROD 8 FT LONG	88	EACH
ITEM 16135.8 - ACORN LUMINAIRE AND POLE	87	EACH
ITEM 16135.9 - PENDANT LUMINAIRE, GFI REC, AND POLE (1 AND 2 HEAD)	43	EACH
ITEM 16135.10 - CONTEMPORARY LUMINAIRE AND POLE	11	EACH
ITEM 16135.11 - REMOVE AND DISPOSED EXISTING STREET LIGHT	23	EACH
ITEM 16135.12 - REMOVE AND STACK EXISTING STREET LIGHT	11	EACH
ITEM 16135.13 - REMOVE AND RELOCATE EXISTING STREET LIGHT	3	EACH
ITEM 16135.15 - WIRE TYPE 7 NO. 1/0 GENERAL PURPOSE	28,000	LNFT
ITEM 16135.17 - WIRE TYPE 7 NO. 6 GENERAL PURPOSE	1,700	LNFT
ITEM 16135.16 - WIRE TYPE 7 NO. 8 GENERAL PURPOSE	9,000	LNFT
ITEM 16135.14 - WIRE TYPE 7 NO. 10 GENERAL PURPOSE	29,000	LNFT
ITEM 16135.18 - LIGHTING CONTROL EQUIPMENT	2	EACH
ITEM 16135.19 - RIBBON LIGHTING	140	LNFT

* - CONTRACTOR FURNISHED

SEE SPECIFICATIONS SECTIONS 16135 REGARDING SPARE POLES, WHICH ARE NOT INCLUDED IN THE QUANTITIES ABOVE

LUMINAIRE SCHEDULE

SYMBOL	CATALOG NO.	POLE	LUMINAIRE	ARM	FINISH	TEMP	DIST	WATT	VOLTAGE
1A	POLE /ARM STERNBERG 6.5S/SCROLL/BOX/CA28SRTS8-FPGV/1-GFI-IUC/BK LED FIXTURE KING LUMINAIRE CAT. K811-P4SG-III-120(SSL)-7030-120:277-KPL31-PR7-WS-3K	CAMBRIDGE 17 SERIES CAST IRON CLAM SHELL 27' TAPERED SMOOTH STEEL SHAFT (28' OVERALL) DUPLEX GFI RECEPTACLE MTD AT (CONFIRM) LOGO -SEAL OF THE CITY OF CAMBRIDGE	LED PENDENT FIXTURE, SHALLOW LENS CREE XPL V30E5 KPL-31 LEVELING DEVICE RME-XPB-H3 CONTROLLER AND ANTENNA	CAMBRIDGE SERIES SINGLE 6' STEEL ARM W/ SCROLL	GLOSS BLACK	3000K	III	120W	120V
1B	POLE /ARM STERNBERG 2A90-6.5S/SCROLL/BOX/CA28SRTS8-FPGV/1-GFI-IUC/BK LED FIXTURE KING LUMINAIRE CAT. K811-P4SG-III-120(SSL)-7030-120:277-KPL31-PR7-WS-3K	CAMBRIDGE 17 SERIES CAST IRON CLAM SHELL 27' TAPERED SMOOTH STEEL SHAFT (28' OVERALL) DUPLEX GFI RECEPTACLE MTD AT (CONFIRM) LOGO -SEAL OF THE CITY OF CAMBRIDGE	LED PENDENT FIXTURE, SHALLOW LENS CREE XPL V30E5 KPL-31 LEVELING DEVICE RME-XPB-H3 CONTROLLER AND ANTENNA	CAMBRIDGE SERIES DOUBLE 90° 6' STEEL ARM W/ SCROLL	GLOSS BLACK	3000K	III	240W	120V
2A	POLE STERNBERG 4212-TFP53-.250 LED FIXTURE KING LUMINAIRE CAT. K118R-B2AR-III-75(SSL)1042-120:277-K16-WS-PR7-3K S/F HSS	CORE CAST 21 SERIES ALUMINUM POLE 17" DIA CAST ALUMINUM BASE 12' TAPERED FLUTED SHAFT	LED ACORN POST TOP FIXTURE CREE XPG2 HE7 RTM-XBP-IO CONTROLLER AND ANTENNA HOUSE SIDE SHIELD	NONE	TEXTURED BLACK	3000K	III	72W	120V
2B.1	POLE SELUX CAT. S35-14-B-BC1-REC-SM11131 LED FIXTURE SELUX CAT. SACL-R3-5G450-30-15-BK-UNV-DS	14' STEEL ROUND POLE TENON MOUNTING BLACK FINISH	LED CONTEMPORARY POST TOP FIXTURE ALUMINUM HOOD, COVER AND SUPPORTS RTM-XBP-IO CONTROLLER AND ANTENNA *ANTENNA NOT INSTALLED BY MANUFACTURER, CONTRACTOR TO INSTALL IN FIELD	NONE	BLACK	3000K	IV	47W	120V
2B.2	POLE SELUX CAT. S35-14-B-BC1-REC-SM11131 LED FIXTURE SELUX CAT. SACL-R2-5G450-30-15-BK-UNV-HS-DS	14' STEEL ROUND POLE TENON MOUNTING BLACK FINISH	LED CONTEMPORARY POST TOP FIXTURE ALUMINUM HOOD, COVER AND SUPPORTS RTM-XBP-IO CONTROLLER AND ANTENNA *ANTENNA NOT INSTALLED BY MANUFACTURER, CONTRACTOR TO INSTALL IN FIELD	NONE	BLACK	3000K	II	47W	120V
3A	LED FIXTURE ZALA-SW-PPS-LP-FT(VERIFY)-WET-30-SO-ENC/TL-BY ECBRL-CL-PER PLAN	NONE	Q-CAP FLEXIABLE FIXTURES ZALA-SW FULLY ENCAPULATED FLEXIBLE LINEAR LED FIXTURE TUBMAN SQUARE BENCH LUMINIARES CONTRACTOR TO INSTALL IN FIELD	NONE	CLEAR	3000K	N/A	1.5W/FT	120V

ALL FIXTURES, POLES AND ARMS SHALL MATCH CURRENT CITY OF CAMBRIDGE STANDARDS AND SPECIFICATIONS.

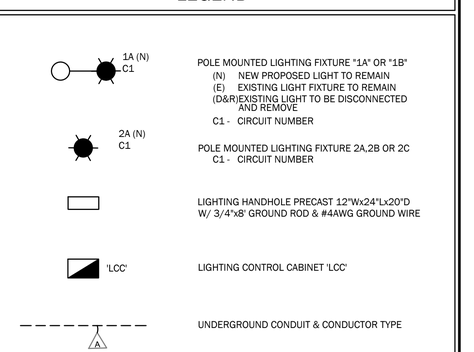

TYPICAL DETAIL LIGHTING CABLE SPLICE
NOT TO SCALE

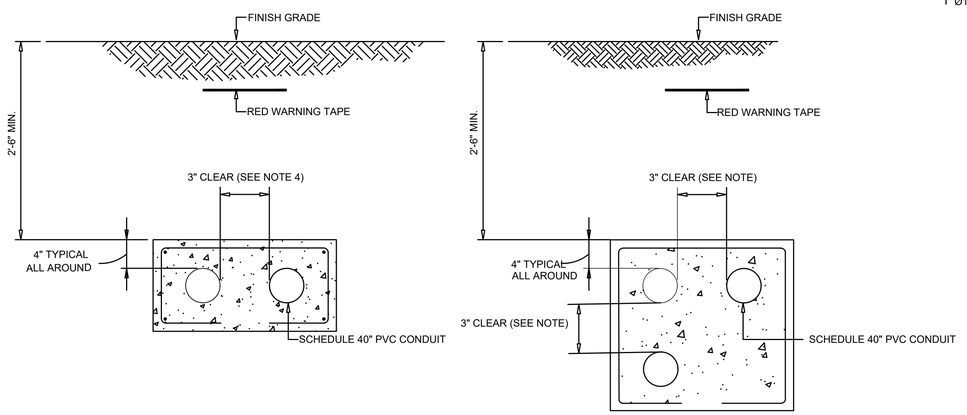

UG CONCRETE ENCASED DUCT BANK
NOT TO SCALE

NOTE:
ALL CONDUITS FROM THE LIGHTING CONTROL CABINET 'LCC' AND CONDUITD FROM HANDHOLE TO HANDHOLE SHALL BE ENCASED IN CONCRETE

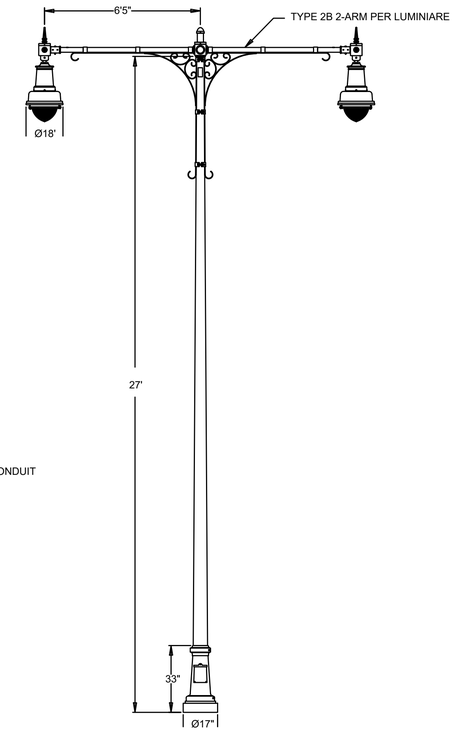

TYPE 1A (SINGLE) AND 1B (DOUBLE)
NOT TO SCALE

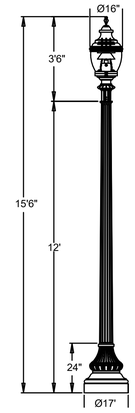

TYPE 2A
NOT TO SCALE

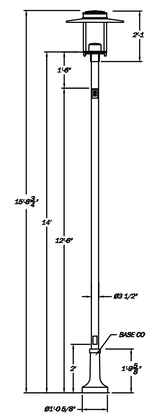

TYPE 2B.1 ; 2B.2
NOT TO SCALE

CONFORMED SET

HDR ENGINEERING, INC.
99 HIGH STREET, SUITE 2300
BOSTON, MASSACHUSETTS 02110-2378
(617) 357-7700

PATRICK D. BROMLEY ELECTRICAL No. 47668 REGISTERED PROFESSIONAL ENGINEER
8-5-22

Scale	AS NOTED			
Date	MAY, 2022			
Job No.				
Designed by	CDK			
Drawn by	CDK	0	CONFORMED SET	8/5/2022
Checked by	JAD	No.	Description	Date
Approved by	PGB	REVISIONS		

THE WORKS — CAMBRIDGE DEPARTMENT OF PUBLIC

Client	CITY OF CAMBRIDGE, MA	Sheet	ED-1.01
Project	RIVER STREET INFRASTRUCTURE AND STREETSCAPE PROJECT	Total Sheets	381
Drawing	**LIGHTING DETAILS - 1**	File No.	

File: C:\PWWORKING\EAST\01\D0786396\17113XXX_(LIGHTING DETAILS).DWG Plotted: 8/23/2022 9:34:18 AM

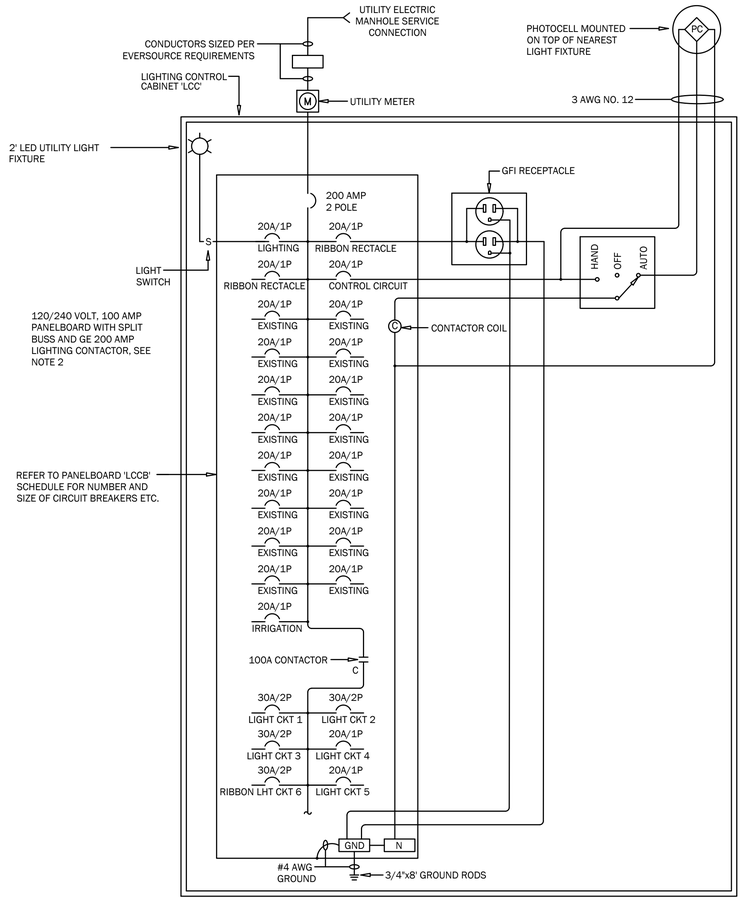

ONE LINE DIAGRAM FOR CARL BARON PLAZA

NOT TO SCALE

PNLBD 'LCCB' (GENERAL ELECTRIC) LOCATION CARL BARON 'LCC'

200A MAIN BREAKER, 120'/240V, 1–PHASE, 3–WIRE (SPLIT BUS)

CKT NO	BKR SIZE	LOAD DESCRIPTION	LOAD DESCRIPTION	BKR SIZE	CKT NO
1	20	EXISTING	EXISTING	20	2
3	20	EXISTING	EXISTING	20	4
5	20	EXISTING	EXISTNG	20	6
7	20	EXISTING	EXISTNG	20	8
9	20	EXISTING	EXISTNG	20	10
11	20	EXISTING	EXISTNG	20	12
13	70	EXISTING	EXISTNG	20	14
15			EXISTNG	20	16
17	20	LED STRIP LGT	RIBBON RECEPTACLE	20	18
19	20	RIBBON RECEPTACLES	LIGHTING CONTROL	20	20
21	20	IRRIGATION CONTROLLER	SPARE		22
23		SPARE	SPARE		24
25		SPARE	SPARE		26
27		SPARE	SPARE		28
29		SPARE	SPARE		30
31		SPARE	SPARE		32

GE-100AMP 2-POLE LIGHTING CONTACTOR — C — CONTACTOR COIL (SEE ONE LINE DIAGRAM)

33	30	CBP ROADWAY LTG CKT 1	RIBBON STRUCTURE LTG CKT 2	30	34
35		↓	↓		36
37	30	CBP ROADWAY LTG CKT 3	BUS TRANSIT LTG CKT 4	20	38
39		↓	BUS TRANSIT LTG CKT 5	20	40
41	30	RIBBON STRUCTURE LTG CKT 6	SPARE		42
43		↓	SPARE		44
45		SPARE	SPARE		46
47		SPARE	SPARE		48

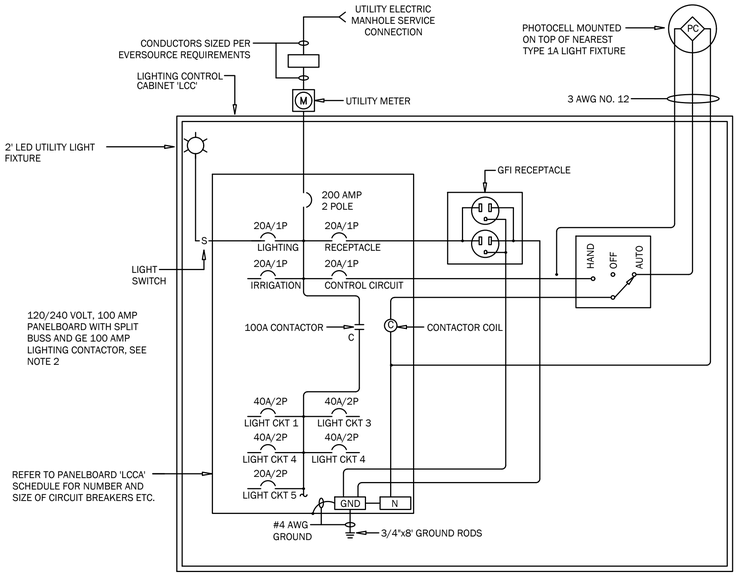

ONE LINE DIAGRAM FOR HOWARD ST

NOT TO SCALE

PNLBD 'LCCA' (GENERAL ELECTRIC) LOCATION RIVER ST 'LCC'

200A MAIN BREAKER, 120'/240V, 1–PHASE, 3–WIRE (SPLIT BUS)

CKT NO	BKR SIZE	LOAD DESCRIPTION	LOAD DESCRIPTION	BKR SIZE	CKT NO
1	20	LED STRIP LIGHT	RECEPTACLE	20	2
3	20	IRRIGATION CONTROLLER	LIGHTING CONTROL	20	4
5		SPARE	SPARE		6
7		SPARE	SPARE		8

GE-100AMP 2-POLE LIGHTING CONTACTOR — C — CONTACTOR COIL (SEE ONE LINE DIAGRAM)

9	40	RIVER ST RDWAY (NW) LTG CKT 1	RIVER ST PED (NE) LTG CKT 3	40	10
11		↓	↓		12
13	40	RIVER ST RDWAY (SW) LTG CKT 2	RIVER ST PED (SE) LTG CKT 4	40	14
15		↓	↓		16
17	20	TUBMAN SQ RIBBON STRUCTURE	SPARE		18
19		↓			20
21		SPARE			22
23		↓	↓		24

NOTE:
LCC FOR RIVER STREET LIGHTING IS LOCATED ON THE NORTHWEST CORNER OF HOWARD AND RIVER STREET INTERSECTION.

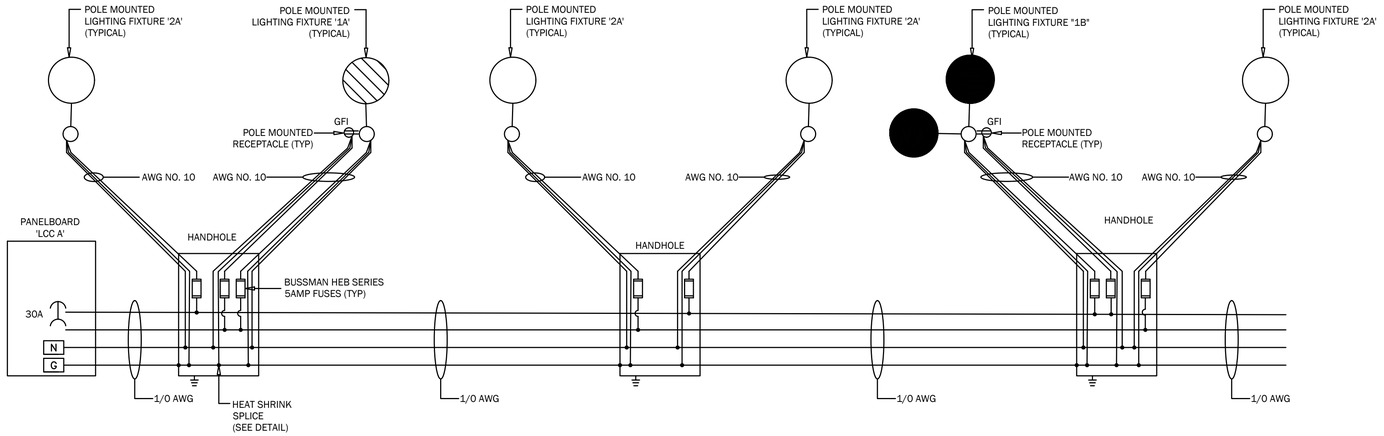

TYPICAL WIRING DIAGRAM

NOT TO SCALE

NOTE:
MAINTAIN ALTERNATING PHASING FOR PHASE BALANCING ON EACH CIRCUIT .

CONFORMED SET

HDR ENGINEERING, INC.
99 HIGH STREET, SUITE 2300
BOSTON, MASSACHUSETTS 02110–2378
(617) 357–7700

PATRICK G. BROWN JR. ELECTRICAL No. 42806 REGISTERED PROFESSIONAL ENGINEER
8-5-22

Scale	AS NOTED			
Date	MAY, 2022			
Job No.				
Designed by	CDK			
Drawn by	CDK	0	CONFORMED SET	8/5/2022
Checked by	JAD	No.	Description	Date
Approved by	PGB	REVISIONS		

CAMBRIDGE DEPARTMENT OF PUBLIC WORKS

Client: CITY OF CAMBRIDGE, MA	Sheet: ED-1.02
Project: RIVER STREET INFRASTRUCTURE AND STREETSCAPE PROJECT	Total Sheets: 381
Drawing: **LIGHTING DETAILS - 2**	File No.

File: C:\PW\WORKING\EAST01\D0786396\7113XXX_(LIGHTING DETAILS).DWG Plotted: 8/23/2022 9:34:22 AM

APEX LIGHTING SOLUTIONS	Project INMANSQINS Date 6/22/2019 INMAN SQUARE INTERSECTION Submitted By APEX - BOSTON	Catalog Number SALL-R3-1-UCAT-09-55-13-SRX-12022YR5465/A30-14-DX-9401-RSD-SW127 Notes	TYPE: 2B

Saturn Cutoff LED

selux

Bolt Circle for A35 & S35
Use caution when setting anchor bolts. Bolts must be vertically straight and centered on dimensions shown

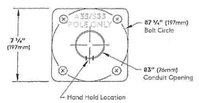

Note: Adequate drainage must be provided in concrete foundation.

Anchor Bolt Detail for A35 & S35

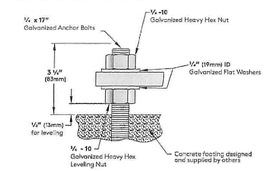

Bolt Circle for S635
Use caution when setting anchor bolts. Bolts must be vertically straight and centered on dimensions shown.

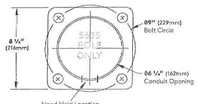

Note: Adequate drainage must be provided in concrete foundation.

Anchor Bolt Detail for S635

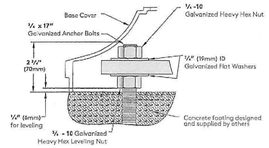

Selux Corporation © 2018, T 845-534-1400, 800-735-4927, F 845-534-1401, www.selux.us
In a continuing effort to offer the best product possible, we reserve the right to change, without notice, specifications or materials that in our opinion will not alter the function of the product. Specification sheets found at www.selux.us are the most recent versions and supercede all other printed or electronic versions.

SELUX ANCHOR DETAIL
NOT TO SCALE - POLE 2B

12'Acorn ROUND LIGHT POLE BASE

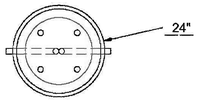

NPCA Precast ... The Concrete Solution.

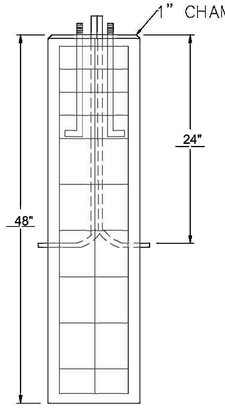

BOLT CIRICLE __12"_____
BOLT PROJECTION __4"_____
BOLTS_1" x 36" L Bolt (x4)__
CONDUIT – 1-2" Rigid___
CONDUIT DEPTH– 24"_____
GROUND ROD–_____

DESIGN NOTES:
1. CONCRETE 5,000 PSI @ 28 DAYS
2. REINFORCING #3TIES @ 12" O.C.,
16" DIA > (6) #5 REBAR VERTICALS EQUAL SPACED
17" DIA < (8) #5 REBAR VERTICALS EQUAL SPACED

CONDUIT LAYOUT:

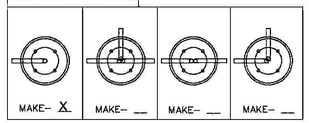

SCITUATE COMPANIES
SCITUATE RAY PRECAST
120 CLAY PIT ROAD
MARSHFIELD, MA 02050
PHONE # 1–800–440–0009
FAX # 781–837–4320
CONTRACTOR:
JOB NAME:
DATE:
APPROVED BY:

12' ACORN PRECAST FOUNDATION DETAIL
NOT TO SCALE - POLE 2A

1907 ROUND LIGHT POLE BASE

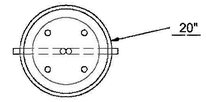

NPCA Precast ... The Concrete Solution.

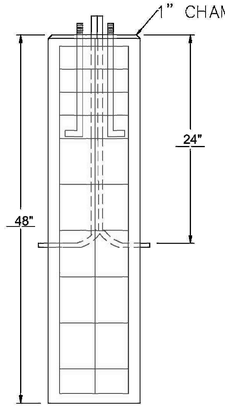

BOLT CIRICLE __11"_____
BOLT PROJECTION __4"_____
BOLTS_1" x 36" L Bolt (x4)__
CONDUIT – 1-2" Rigid___
CONDUIT DEPTH– 24"_____
GROUND ROD–_____

DESIGN NOTES:
1. CONCRETE 5,000 PSI @ 28 DAYS
2. REINFORCING #3TIES @ 12" O.C.,
16" DIA > (6) #5 REBAR VERTICALS EQUAL SPACED
17" DIA < (8) #5 REBAR VERTICALS EQUAL SPACED

CONDUIT LAYOUT:

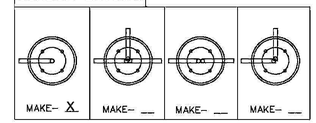

SCITUATE COMPANIES
SCITUATE RAY PRECAST
120 CLAY PIT ROAD
MARSHFIELD, MA 02050
PHONE # 1–800–440–0009
FAX # 781–837–4320
CONTRACTOR:
JOB NAME:
DATE:
APPROVED BY:

1907 PRECAST FOUNDATION DETAIL
NOT TO SCALE - POLE 2A

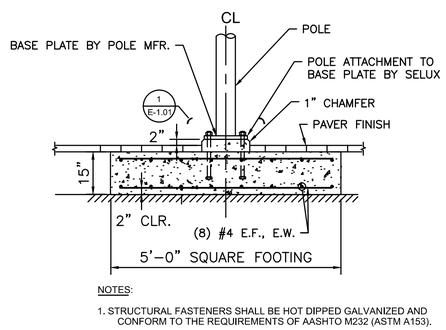

NOTES:
1. STRUCTURAL FASTENERS SHALL BE HOT DIPPED GALVANIZED AND CONFORM TO THE REQUIREMENTS OF AASHTO M232 (ASTM A153).

SHALLOW FOUNDATION AND ANCHORAGE DETAIL
NOT TO SCALE - POLE 2A: 2B

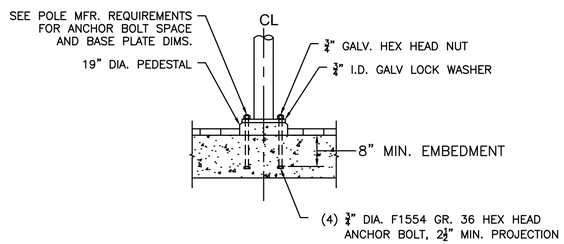

DETAIL 1
NOT TO SCALE - POLE 2A

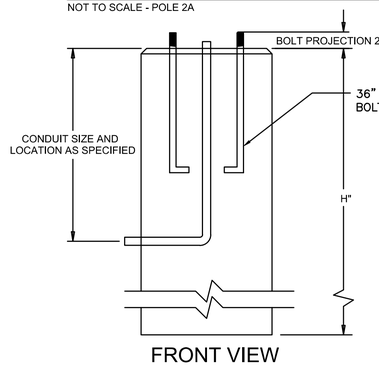

FRONT VIEW

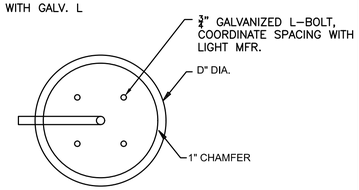

TOP VIEW

PRECAST LIGHT STANDARD FOUNDATION
NOT TO SCALE

NOTES:
1 - FOR LIGHT TYPES 1A/1B: D=24-INCHES; H=60-INCHES
2 - FOR LIGHT TYPE 2A D=24-INCHES; H=48-INCHES
3 - CONCRETE 4000 PSI AT 28 DAYS
4 - REINFORCING: 10 - #7 VERTICALLY AND #4 TIES 12" O.C. HORIZONTALLY (NOT SHOWN)

ISSUED FOR BID

HDR ENGINEERING, INC.
99 HIGH STREET, SUITE 2300
BOSTON, MASSACHUSETTS 02110–2378
(617) 357–7700

COMMONWEALTH OF MASSACHUSETTS — PATRICIA K. MACKEY — No. 47665 — REGISTERED PROFESSIONAL ENGINEER
5/5/22

Scale	AS NOTED				
Date	MAY, 2022				
Job No.					
Designed by	CDK				
Drawn by	CDK	0	IFB	5/05/2022	
Checked by	JAD	No.	Description	Date	
Approved by	PGB	REVISIONS			

THE WORKS — CAMBRIDGE DEPARTMENT OF PUBLIC WORKS

Client	CITY OF CAMBRIDGE, MA	Sheet ED-1.03
Project	RIVER STREET INFRASTRUCTURE AND STREETSCAPE PROJECT	Total Sheets 381
Drawing	**LIGHTING DETAILS - 3**	File No.

PM
File: C:\PWWORKINGIEAST01\D0786396\7113XXX_(LIGHTING DETAILS).DWG Plotted: 5/2/2022 5:51:30

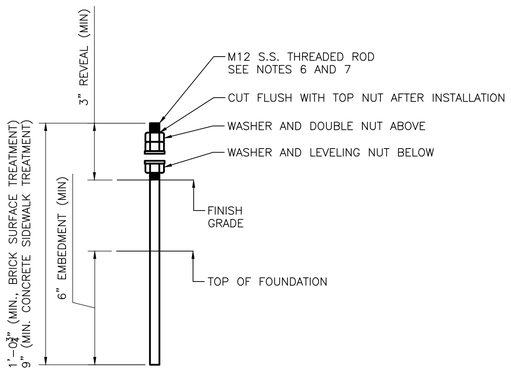

EXTERIOR ANCHOR

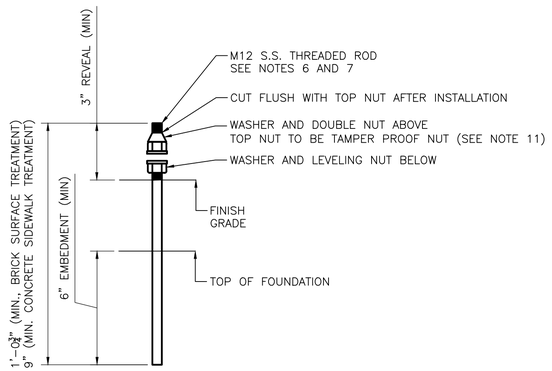

INTERIOR ANCHOR

ANCHOR BOLT DETAIL

SCALE: $\frac{3}{4}$" = 1'-0"

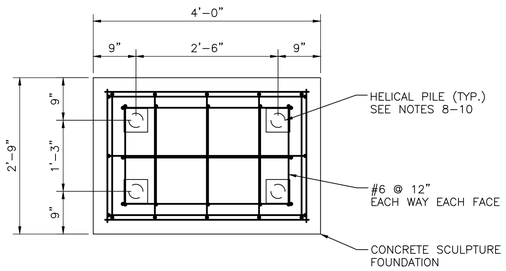

ARTWORK HELICAL PILE LAYOUT

SCALE: $\frac{3}{4}$" = 1'-0"

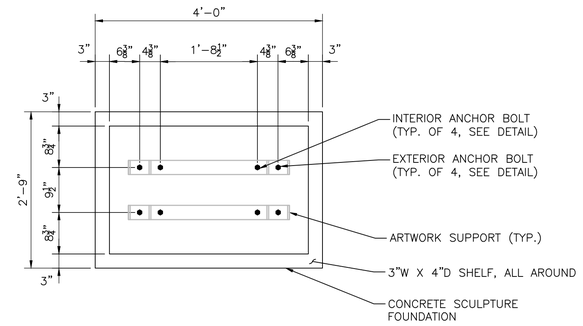

ARTWORK FOUNDATION ANCHOR BOLT LAYOUT

SCALE: $\frac{3}{4}$" = 1'-0"

ART FOUNDATION NOTES:

1. REFER TO CIVIL AND LANDSCAPE DRAWINGS FOR CONCRETE SIDEWALK AND BRICK SURFACE TREATMENT DETAILS.
2. REFER TO UTILITY PLANS FOR LOCATIONS OF ABOVE AND BELOW GRADE UTILITIES IN THE VICINITY OF THE FOUNDATIONS..
3. CONCRETE SHALL BE NORMAL WEIGHT, AIR ENTRAINED, WITH A MAXIMUM WATER–CEMENT RATIO OF 0.45 AND A MINIMUM COMPRESSIVE STRENGTH OF 3500 PSI AT 28 DAYS.
4. PROVIDE A $\frac{3}{4}$" CHAMFER ON ALL EXPOSED EDGES.
5. REINFORCEMENT SHALL BE ASTM A615 GRADE 60, EPOXY COATED. MINIMUM REINFORCEMENT CLEAR COVER TO BE 3" UNLESS OTHERWISE NOTED.
6. ANCHOR BOLTS SHALL BE HILTI HAS GRADE 316 STAINLESS STEEL (S.S.) THREADED ROD OR APPROVED EQUAL. ANCHOR BOLTS SHALL BE POST–INSTALLED WITH HILTI HY 100 ADHESIVE OR APPROVED EQUAL ACCORDING TO MANUFACTURER INSTRUCTIONS.
7. BOLT PATTERN DIMENSIONS SHOWN IN THE PLANS ARE APPROXIMATE, PENDING FABRICATION OF THE ARTWORK. CONTRACTOR SHALL OBTAIN ACTUAL BOLT PATTERN DIMENSIONS FROM THE CITY PRIOR TO INSTALLING BOLTS. BOLTS SHALL BE INSTALLED USING A TEMPLATE.
8. HELICAL PILES ARE REQUIRED FOR ART INSTALLATIONS AT BLACKSTONE STREET AND MONTAGUE STREET ONLY. FOUNDATIONS AT OTHER LOCATIONS SHALL BE INSTALLED ON 2 FEET COMPACTED GRAVEL SUBBASE ON COMPACTED SUBGRADE.
9. HELICAL PILES SHALL BE DESIGNED BY CONTRACTOR. THE TOTAL FACTORED LOAD ON THE PILE IS Pu = 1.9 KIPS. HELICAL PILES SHALL BE DESIGNED TO SUPPORT A MINIMUM COMPRESSIVE LOAD OF 2*Pu = 3.8 KIPS. DESIGN OF HELICAL PILES SHALL BE SUBMITTED FOR APPROVAL.
10. HELICAL PILES SHALL BE GALVANIZED, AND SHALL INCORPORATE A ZONE OF CEMENT GROUT AROUND THE BAR FOR LATERAL SUPPORT AND CORROSION PROTECTION. SEE GEOTECHNICAL REPORT FOR ADDITIONAL INFORMATION.
11. SPECIAL HAND DRIVER WITH TAMPER–RESISTANCE TRI–GROOVE SOCKET FOR THE NUT SHALL BE PROVIDED TO THE ARTIST FOR INSTALLATION AND THEN TURNED OVER TO THE CAMBRIDGE ART COUNCIL FOR ARTWORK MAINTENANCE.

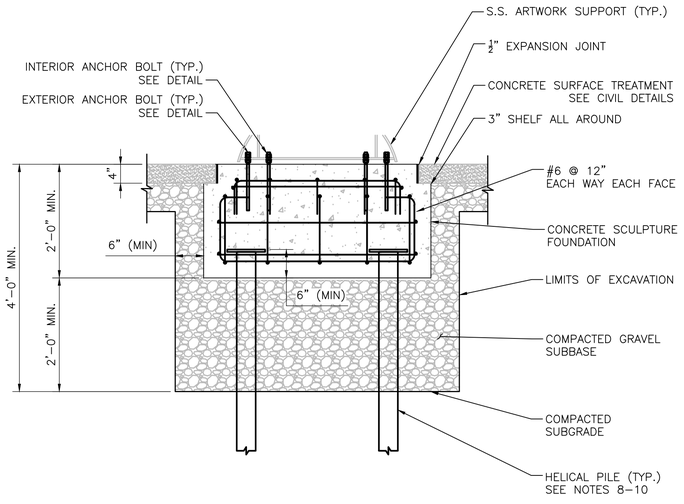

ARTWORK FOUNDATION WITH CONCRETE SIDEWALK SURFACE TREATMENT

SCALE: $\frac{3}{4}$" = 1'-0"

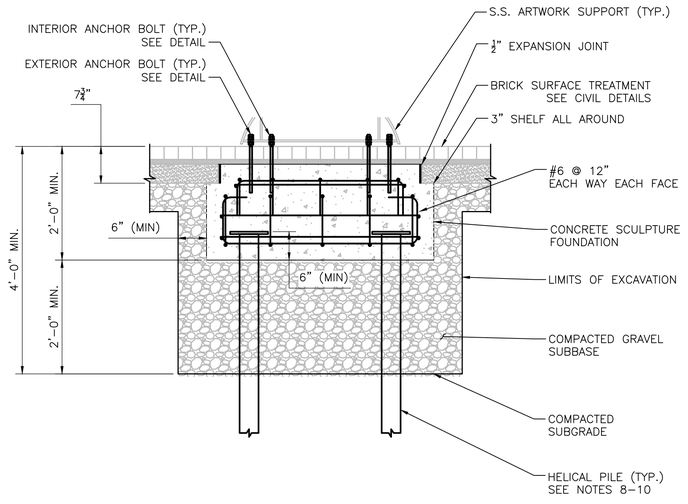

ARTWORK FOUNDATION WITH BRICK SURFACE TREATMENT

SCALE: $\frac{3}{4}$" = 1'-0"

ISSUED FOR BID

HDR ENGINEERING, INC.
99 HIGH STREET, SUITE 2300
BOSTON, MASSACHUSETTS 02110–2378
(617) 357–7700

MARIO LOCOCO CIVIL ENGINEER NO. 53117 REGISTERED PROFESSIONAL ENGINEER
COMMONWEALTH OF MASSACHUSETTS
5/6/2022

Scale	AS NOTED
Date	11/17/20
Job No.	
Designed by	PJL
Drawn by	PJL
Checked by	SLB
Approved by	ML

No.	Description	Date
	REVISIONS	

THE WORKS — CAMBRIDGE DEPARTMENT OF PUBLIC WORKS

Client	CITY OF CAMBRIDGE, MA
Project	RIVER STREET INFRASTRUCTURE AND STREETSCAPE PROJECT
Drawing	**ART INSTALLATION FOUNDATION DETAILS**
Sheet	S-1.01
Total Sheets	381
File No.	

File: C:\PWWORKING\EAST01\D1817057\7113XXX_(STRUCTURAL DETAILS).DWG Plotted: 4/5/2022 11:27:15 AM

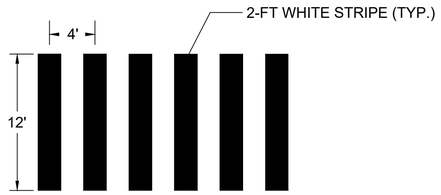

NOTE:
1. CROSSWALK LINE SHOULD BE BETWEEN ONE AND THREE FEET FROM THE CURB.

CAMBRIDGE STANDARD CROSSWALK
SCALE: N.T.S.

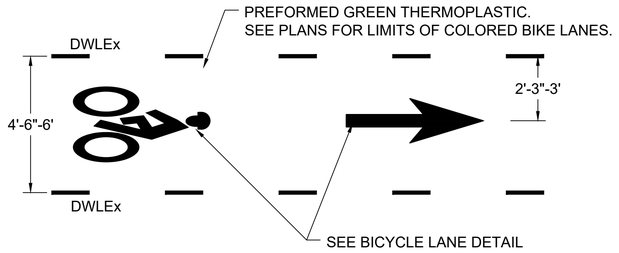

BIKE LANE CROSSING PVMT. MARKING
SCALE: N.T.S.

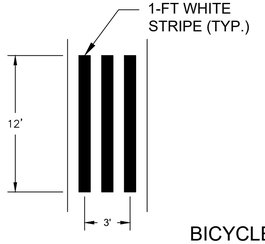

BIKE LANE CROSSWALK
SCALE: N.T.S.

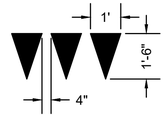

BICYCLE YIELD LINE PAVEMENT MARKING
NOT TO SCALE

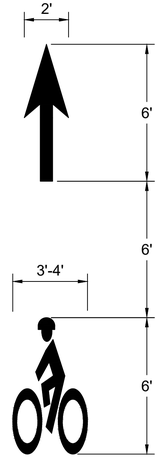

BICYCLE LANE PVMT. MARKING
SCALE: N.T.S.

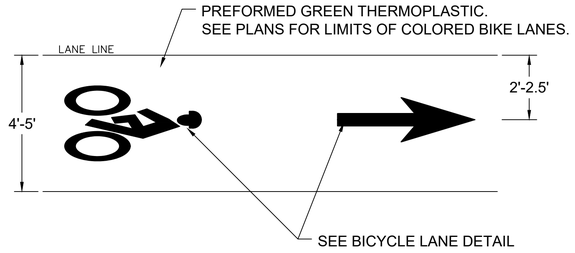

COLORED BIKE LANE PVMT. MARKING
SCALE: N.T.S.

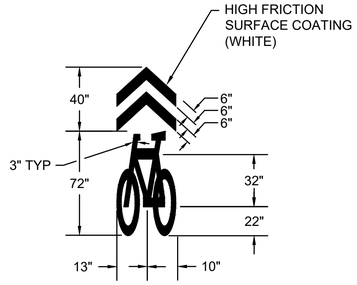

BIKE SHARROW DETAIL
NOT TO SCALE

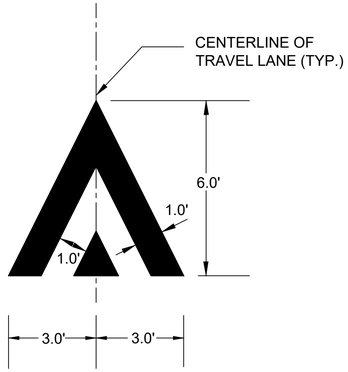

RAMP MARKING DETAIL
SCALE: N.T.S.

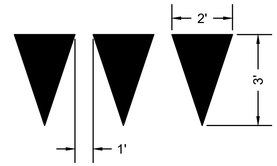

YIELD LINE PAVEMENT MARKING
NOT TO SCALE

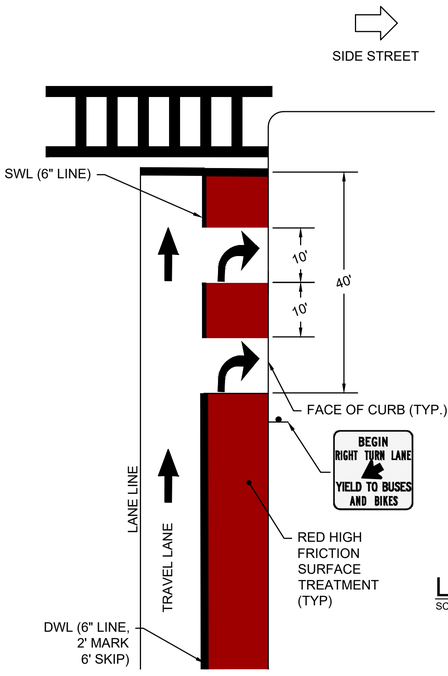

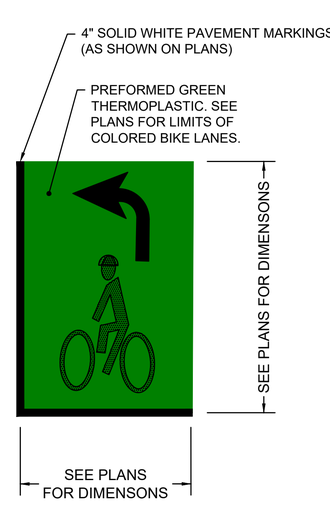

LEFT-TURN BOX DETAIL
SCALE: N.T.S.

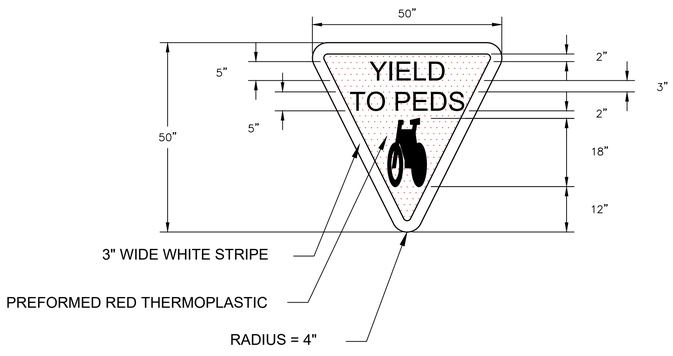

NOTES:
1. BIKES YIELD TO PEDS PAVEMENT MARKINGS SHALL BE SURFACE APPLIED TAPE.

BIKES YIELD TO PEDS PAVEMENT MARKING DETAIL
SCALE: N.T.S.

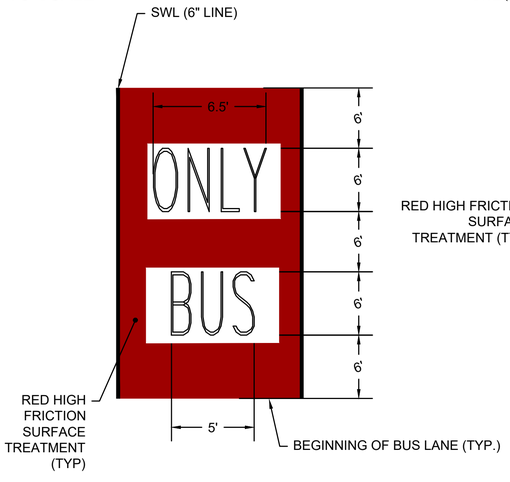

BUS LANE LEGEND DETAILS
SCALE: N.T.S.

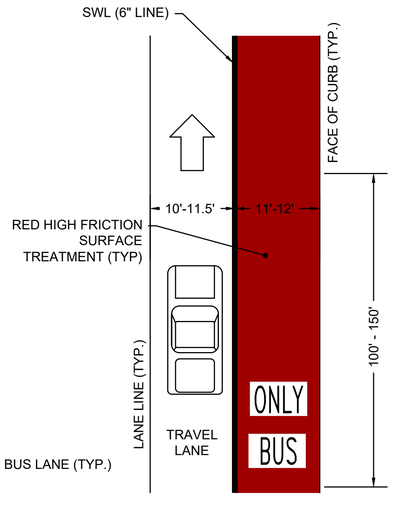

EXCLUSIVE BUS LANE
SCALE: N.T.S.

SHARED BUS LANE VEHICLE RIGHT TURN LANE MARKING
NOT TO SCALE

ISSUED FOR BID

HDR ENGINEERING, INC.
99 HIGH STREET, SUITE 2300
BOSTON, MASSACHUSETTS 02110-2378
(617) 357-7700

McMAHON TRANSPORTATION ENGINEERS & PLANNERS

COMMONWEALTH OF MASSACHUSETTS
PHILIP VIVEIROS
CIVIL
No. 45565
REGISTERED PROFESSIONAL ENGINEER
5/2/2022

Scale	AS NOTED			
Date	MAY 2022			
Job No.	----			
Designed by	CPM			
Drawn by	JAV			
Checked by	CPM	No.	Description	Date
Approved by	PV	REVISIONS		

THE WORKS — CAMBRIDGE DEPARTMENT OF PUBLIC WORKS

Client	CITY OF CAMBRIDGE, MA
Project	RIVER STREET INFRASTRUCTURE AND STREETSCAPE PROJECT
Drawing	**CONSTRUCTION DETAILS 1**
Sheet	DET-1.01
Total Sheets	381
File No.	

Plotted: 5/2/2022 2:02:06 PM
File: I:\ENGIY\16043.45 RIVER STREET\HD\DWG\PLOT\7113XXX_TR CONSTRUCTION DETAILS.DWG

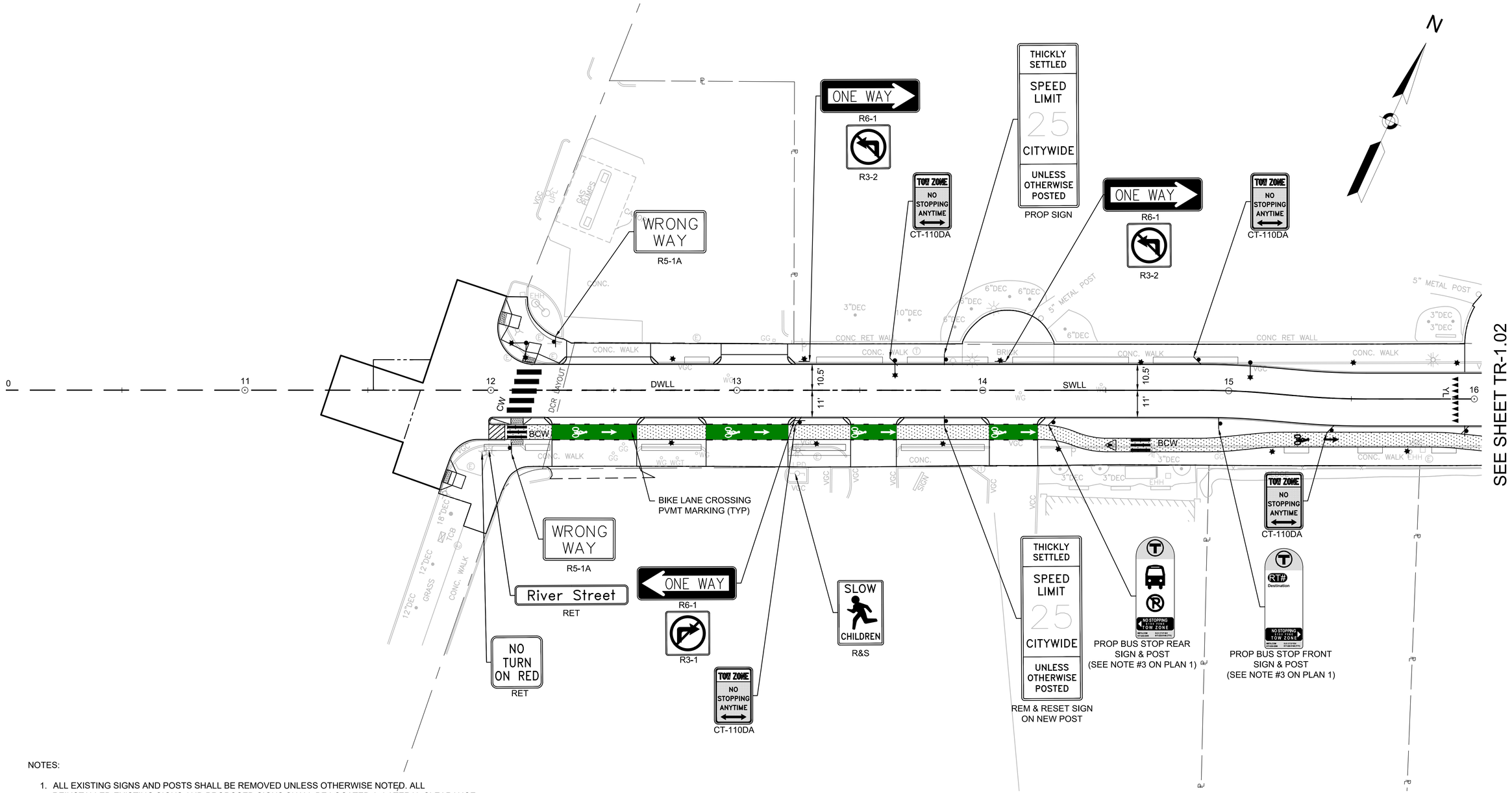

NOTES:

1. ALL EXISTING SIGNS AND POSTS SHALL BE REMOVED UNLESS OTHERWISE NOTED. ALL REINSTALLED EXISTING SIGNS AND PROPOSED SIGNS SHALL BE LOCATED A LATERAL CLEARANCE OF 1' (MIN) FROM BACK OF CURB.
2. THE CONTRACTOR SHALL COORDINATE THE FINAL PAVEMENT MARKING CONFIGURATION WITH THE CITY PRIOR TO PLACING PAVEMENT MARKINGS.
3. MBTA BUS STOP SIGNS TO BE FURNISHED BY MBTA. CONTRACTOR TO COORDINATE WITH MBTA FOR INSTALLATION OF BUS STOP SIGNS.
4. CITY CURB USE REGULATION SIGNS TO BE FURTHER DEVELOPED IN COORDINATION WITH TPT AND SHOWN ON FUTURE DESIGN SUBMISSIONS.

PLAN

0 20 50 100

SCALE: 1" = 20'

CONFORMED SET

HDR ENGINEERING, INC.
99 HIGH STREET, SUITE 2300
BOSTON, MASSACHUSETTS 02110–2378
(617) 357–7700

McMAHON TRANSPORTATION ENGINEERS & PLANNERS

COMMONWEALTH OF MASSACHUSETTS
CONOR MURPHY
CIVIL
No. 54506
REGISTERED PROFESSIONAL ENGINEER
8/5/2022

Scale	AS NOTED			
Date	MAY 2022			
Job No.	----			
Designed by	CPM			
Drawn by	JAV	0	CONFORMED SET	8/5/2022
Checked by	CPM	No.	Description	Date
Approved by	PV	REVISIONS		

THE WORKS — CAMBRIDGE DEPARTMENT OF PUBLIC WORKS

Client	CITY OF CAMBRIDGE, MA	Sheet	TR-1.01
Project	RIVER STREET INFRASTRUCTURE AND STREETSCAPE PROJECT	Total Sheets	381
Drawing	TRAFFIC SIGN & PAVEMENT MARKINGS PLAN 1	File No.	

File: I:\ENGIY\16043.45 RIVER STREET\HD\DWG\PLOT\7113XXX_TR(PLOT - TSPM).DWG Plotted: 8/12/2022 3:41:41 PM

SEE SHEET TR-1.08

SEE SHEET TR-1.01

SEE SHEET TR-1.03

STOP R1-1

DO NOT ENTER R5-1

ONE WAY R6-1

PROP RRFB (SOLAR POWERED)

W11-2 W16-7pR

TOW AWAY ZONE RESERVED PARKING CT-800LA

TOW ZONE NO STOPPING ANYTIME CT-110RA

Blackstone Street D3-2

River St D3-1

BLACKSTONE ST

DWLL

DYCL

SWEL

CONC. WALK

VGC

BRICK

METAL POST

3"DEC

5"DEC

10"DEC

16"DEC

11.5'

7'

MATCHLINE

SL

CW

BCW

SWLL

RIVER ST (ONE-WAY →)

RIVER ST (ONE WAY)

10.5'

11'

TOW ZONE NO STOPPING ANYTIME CT-110DA

DO NOT ENTER R5-1

PROP RRFB (SOLAR POWERED)

W11-2 W16-7pR

PUTNAM AVE

Putnam Ave D3-3

River St D3-1

MOUNT ON MAST ARM POLE

TOW ZONE NO STOPPING ANYTIME CT-110LA

TOW ZONE NO PARKING LOADING ZONE 8AM-6PM EXCEPT SUNDAYS CT-300RA

2 HR PARKING 8AM-6PM EXCEPT SUNDAYS CT-227RA

TOW ZONE NO PARKING LOADING ZONE 8AM-6PM EXCEPT SUNDAYS CT-300LA

TOW AWAY ZONE RESERVED PARKING CT-800RA

TOW ZONE NO PARKING STREET CLEANING 8AM TO 2PM SECOND TUESDAY EACH MONTH APRIL 1ST TO NOV. 30TH EXCEPT HOLIDAYS PARKING BY PERMIT ONLY EXCEPT SUNDAYS CITY OF CAMBRIDGE CT-210LBb

TOW ZONE NO PARKING STREET CLEANING 8AM TO 2PM SECOND TUESDAY EACH MONTH APRIL 1ST TO NOV. 30TH EXCEPT HOLIDAYS PARKING BY PERMIT ONLY EXCEPT SUNDAYS CITY OF CAMBRIDGE CT-210RBb

2 HR PARKING 8AM-6PM EXCEPT SUNDAYS CT-227LA

TOW ZONE NO PARKING DURING SNOW EMERGENCY CT-199

TOW ZONE NO PARKING STREET CLEANING 8AM TO 2PM SECOND TUESDAY EACH MONTH APRIL 1ST TO NOV. 30TH EXCEPT HOLIDAYS PARKING BY PERMIT ONLY EXCEPT SUNDAYS CITY OF CAMBRIDGE CT-210RBb

TOW ZONE NO STOPPING ANYTIME CT-110RA

TOW ZONE NO PARKING STREET CLEANING 8AM TO 2PM SECOND TUESDAY EACH MONTH APRIL 1ST TO NOV. 30TH EXCEPT HOLIDAYS PARKING BY PERMIT ONLY EXCEPT SUNDAYS CITY OF CAMBRIDGE CT-210LBb

TOW ZONE NO STOPPING ANYTIME CT-110DA

WALK DON'T WALK HERE TO R1-5

W11-2 (MOD) W16-7pL

PROP RRFB (SOLAR POWERED)

DO NOT ENTER R5-1

ONE WAY R6-1

ONLY R3-5R

EXCEPT BUSES AND BIKES R3-5sP

BUS LANE AHEAD R3-12F

PROP RRFB (SOLAR POWERED)

W11-2 (MOD) W16-7pL

TOW ZONE NO STOPPING ANYTIME CT-110DA

ONLY R3-5R

EXCEPT BUSES AND BIKES R3-5sP

BUS LANE AHEAD R3-12F

AN PUTNAM AVE

DO NOT ENTER

REM & REL SIGNS ON NEW POST

SIGNAL R10-10b

R3-1

River St D3-1 MOUNT ON MAST ARM POLE

NO TURN ON RED R10-11b

R3-2

PROP DO NOT BLOCK INTERSECTION MARKINGS

BIKE LANE CROSSING PVMT MARKING (TYP)

BUS LANE BEGINS R3-12H

SIGNAL R10-10b

CONNECT PROP CONDUIT TO TRAFFIC SIGNAL SYSTEM. SEE SHEET TR-2.01.

TURNING VEHICLES TO R10-15bp

PROP PB (TYP)

PROP RED BUS LANE MARKINGS (TYP)

TOW ZONE NO STOPPING ANYTIME CT-110DA

RIGHT LANE BUS ONLY SP-1

PROP 3" CONDUIT (TYP)

SPEED LIMIT 25 R2-1 (25)

NOTE:

1. FOR NOTES ON TRAFFIC SIGNS & PAVEMENT MARKINGS SEE PLAN 1.

PLAN

0 20 50 100

SCALE: 1" = 20'

CONFORMED SET

HDR ENGINEERING, INC.
99 HIGH STREET, SUITE 2300
BOSTON, MASSACHUSETTS 02110-2378
(617) 357-7700

McMAHON TRANSPORTATION ENGINEERS & PLANNERS

COMMONWEALTH OF MASSACHUSETTS CONOR MURPHY CIVIL No. 54506 REGISTERED PROFESSIONAL ENGINEER 8/5/2022

Scale	AS NOTED
Date	MAY 2022
Job No.	----
Designed by	CPM
Drawn by	JAV
Checked by	CPM
Approved by	PV

No.	Description	Date
0	CONFORMED SET	8/5/2022

REVISIONS

THE WORKS — CAMBRIDGE DEPARTMENT OF PUBLIC WORKS

Client: CITY OF CAMBRIDGE, MA

Project: RIVER STREET INFRASTRUCTURE AND STREETSCAPE PROJECT

Drawing: **TRAFFIC SIGN & PAVEMENT MARKINGS PLAN 2**

Sheet: TR-1.02

Total Sheets: 381

File No.

8/12/2022 3:41:48 PM

File: I:\ENGIY16043.45 RIVER STREET\HD\DWG\PLOT\7113XXX_TR(PLOT - TSPM).DWG Plotted:

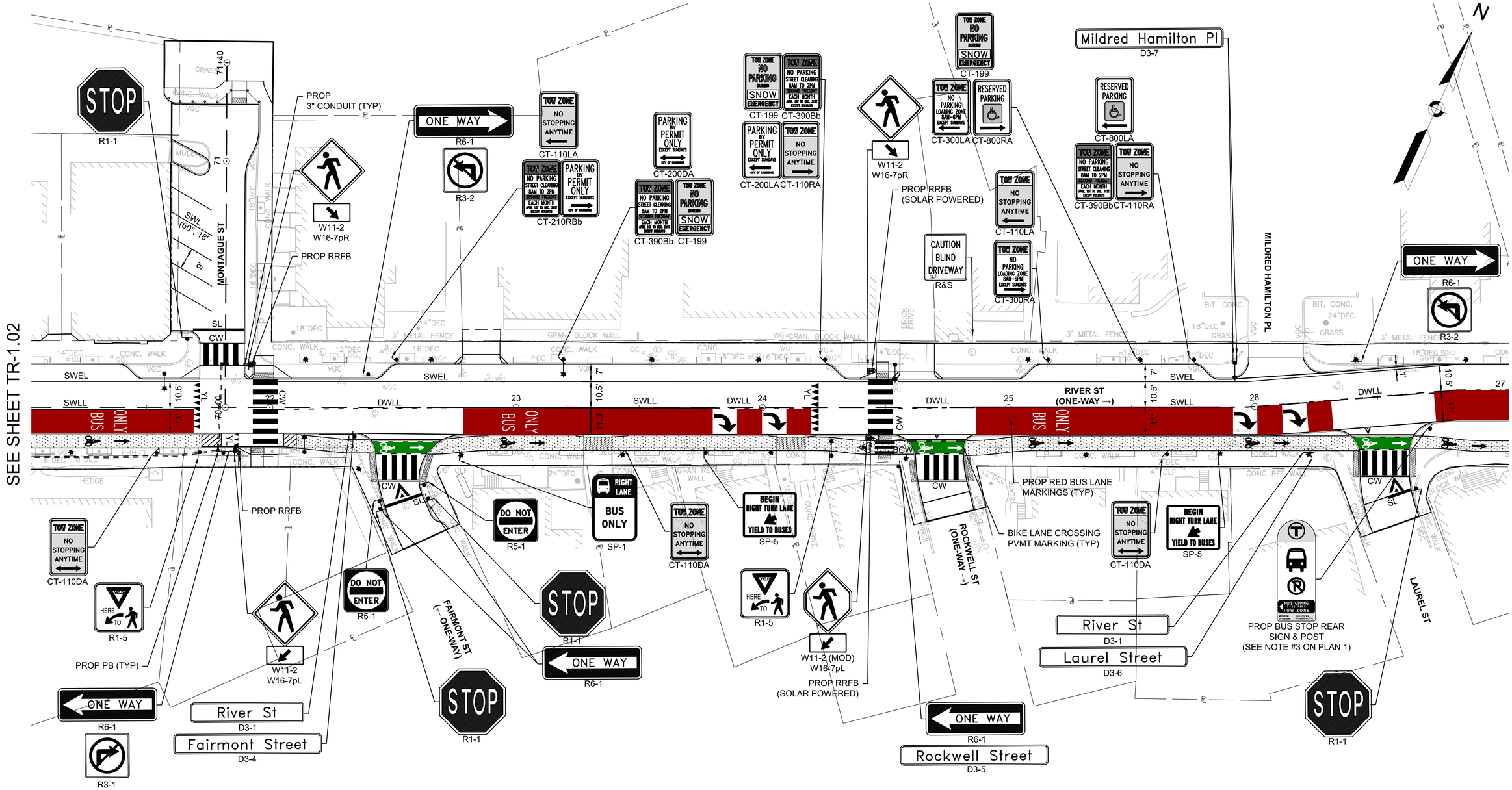

NOTE:

1. FOR NOTES ON TRAFFIC SIGNS & PAVEMENT MARKINGS SEE PLAN 1.

PLAN

0 20 50 100

SCALE: 1" = 20'

CONFORMED SET

HDR ENGINEERING, INC.
99 HIGH STREET, SUITE 2300
BOSTON, MASSACHUSETTS 02110–2378
(617) 357–7700

McMAHON TRANSPORTATION ENGINEERS & PLANNERS

COMMONWEALTH OF MASSACHUSETTS
CONOR MURPHY
CIVIL
No. 54506
REGISTERED PROFESSIONAL ENGINEER
8/5/2022

Scale	AS NOTED			
Date	MAY 2022			
Job No.	----			
Designed by	CPM			
Drawn by	JAV	0	CONFORMED SET	8/5/2022
Checked by	CPM	No.	Description	Date
Approved by	PV	REVISIONS		

THE WORKS — CAMBRIDGE DEPARTMENT OF PUBLIC WORKS

Client	CITY OF CAMBRIDGE, MA	Sheet	TR-1.03
Project	RIVER STREET INFRASTRUCTURE AND STREETSCAPE PROJECT	Total Sheets	381
Drawing	**TRAFFIC SIGN & PAVEMENT MARKINGS PLAN 3**	File No.	

File: I:\ENG\Y16043.45 RIVER STREET\HD\DWG\PLOT\7113XXX_TR(PLOT - TSPM).DWG Plotted: 8/12/2022 3:41:59 PM

SEE SHEET TR-1.03

SEE SHEET TR-1.05

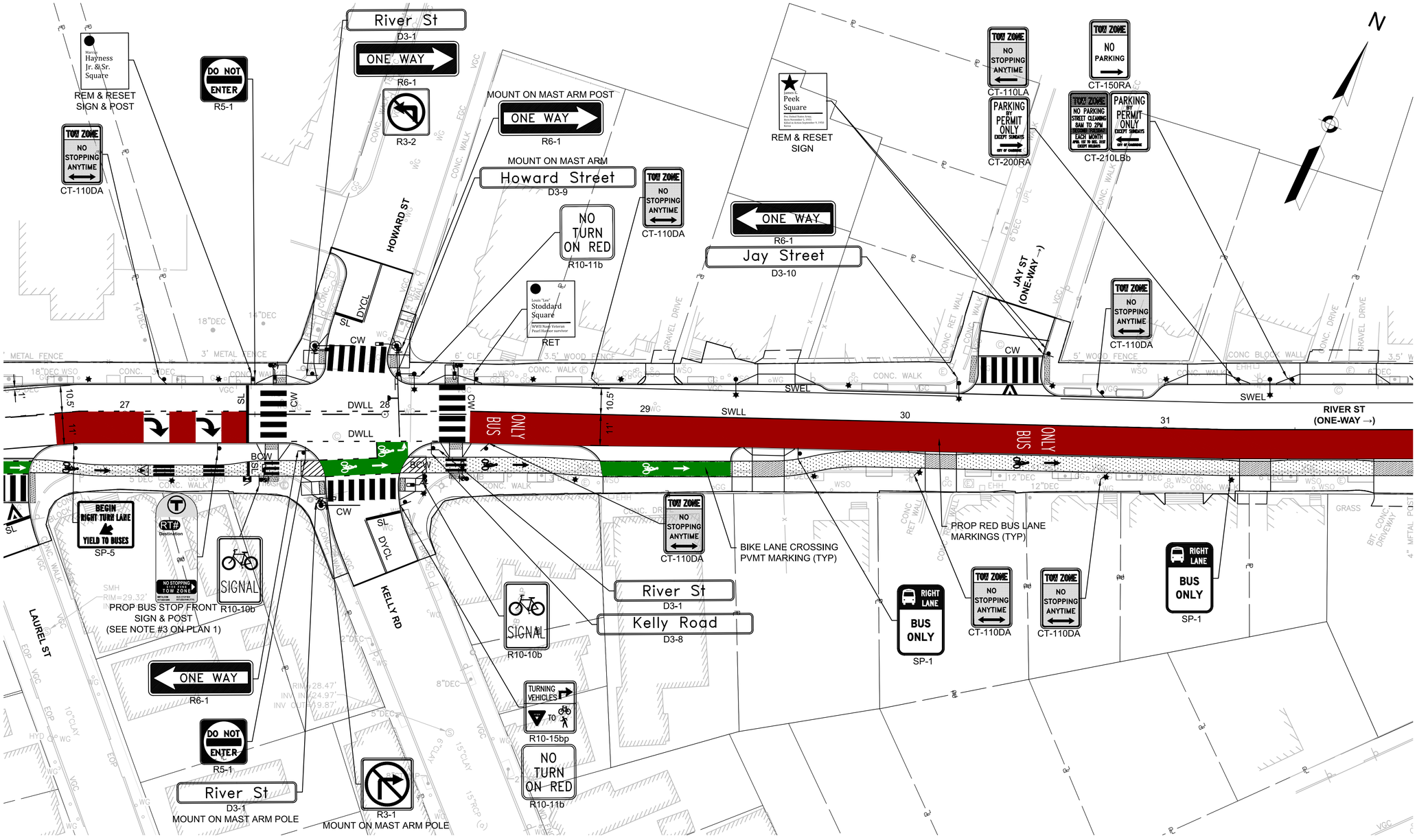

NOTE:

1. FOR NOTES ON TRAFFIC SIGNS & PAVEMENT MARKINGS SEE PLAN 1.

PLAN

0 20 50 100

SCALE: 1" = 20'

CONFORMED SET

HDR ENGINEERING, INC.
99 HIGH STREET, SUITE 2300
BOSTON, MASSACHUSETTS 02110-2378
(617) 357-7700

McMAHON TRANSPORTATION ENGINEERS & PLANNERS

COMMONWEALTH OF MASSACHUSETTS CONOR MURPHY CIVIL No. 54508 REGISTERED PROFESSIONAL ENGINEER
8/5/2022

Scale	AS NOTED			
Date	MAY 2022			
Job No.	----			
Designed by	CPM			
Drawn by	JAV	0	CONFORMED SET	8/5/2022
Checked by	CPM	No.	Description	Date
Approved by	PV	REVISIONS		

THE WORKS — CAMBRIDGE DEPARTMENT OF PUBLIC WORKS

Client	CITY OF CAMBRIDGE, MA	Sheet	TR-1.04
Project	RIVER STREET INFRASTRUCTURE AND STREETSCAPE PROJECT	Total Sheets	381
Drawing	**TRAFFIC SIGN & PAVEMENT MARKINGS PLAN 4**	File No.	

File: I:\ENGIY16043.45 RIVER STREET\HDD\DWG\PLOT\7113XXX_TR(PLOT - TSPM).DWG Plotted: 8/12/2022 3:42:10 PM

SEE SHEET TR-1.04

SEE SHEET TR-1.06

NOTE:

1. FOR NOTES ON TRAFFIC SIGNS & PAVEMENT MARKINGS SEE PLAN 1.

PLAN

0 20 50 100

SCALE: 1" = 20'

CONFORMED SET

HDR ENGINEERING, INC.
99 HIGH STREET, SUITE 2300
BOSTON, MASSACHUSETTS 02110-2378
(617) 357-7700

McMAHON TRANSPORTATION ENGINEERS & PLANNERS

COMMONWEALTH OF MASSACHUSETTS CONOR MURPHY CIVIL No. 54506 REGISTERED PROFESSIONAL ENGINEER 8/5/2022

Scale	AS NOTED			
Date	MAY 2022			
Job No.	----			
Designed by	CPM			
Drawn by	JAV	0	CONFORMED SET	8/5/2022
Checked by	CPM	No.	Description	Date
Approved by	PV	REVISIONS		

THE WORKS — CAMBRIDGE DEPARTMENT OF PUBLIC WORKS

Client	CITY OF CAMBRIDGE, MA
Project	RIVER STREET INFRASTRUCTURE AND STREETSCAPE PROJECT
Drawing	**TRAFFIC SIGN & PAVEMENT MARKINGS PLAN 5**
Sheet	TR-1.05
Total Sheets	381
File No.	

8/12/2022 3:42:19 PM
File: I:\ENGIY16043.45 RIVER STREET\HD\DWG\PLOT\7113XXX_TR(PLOT - TSPM).DWG Plotted:

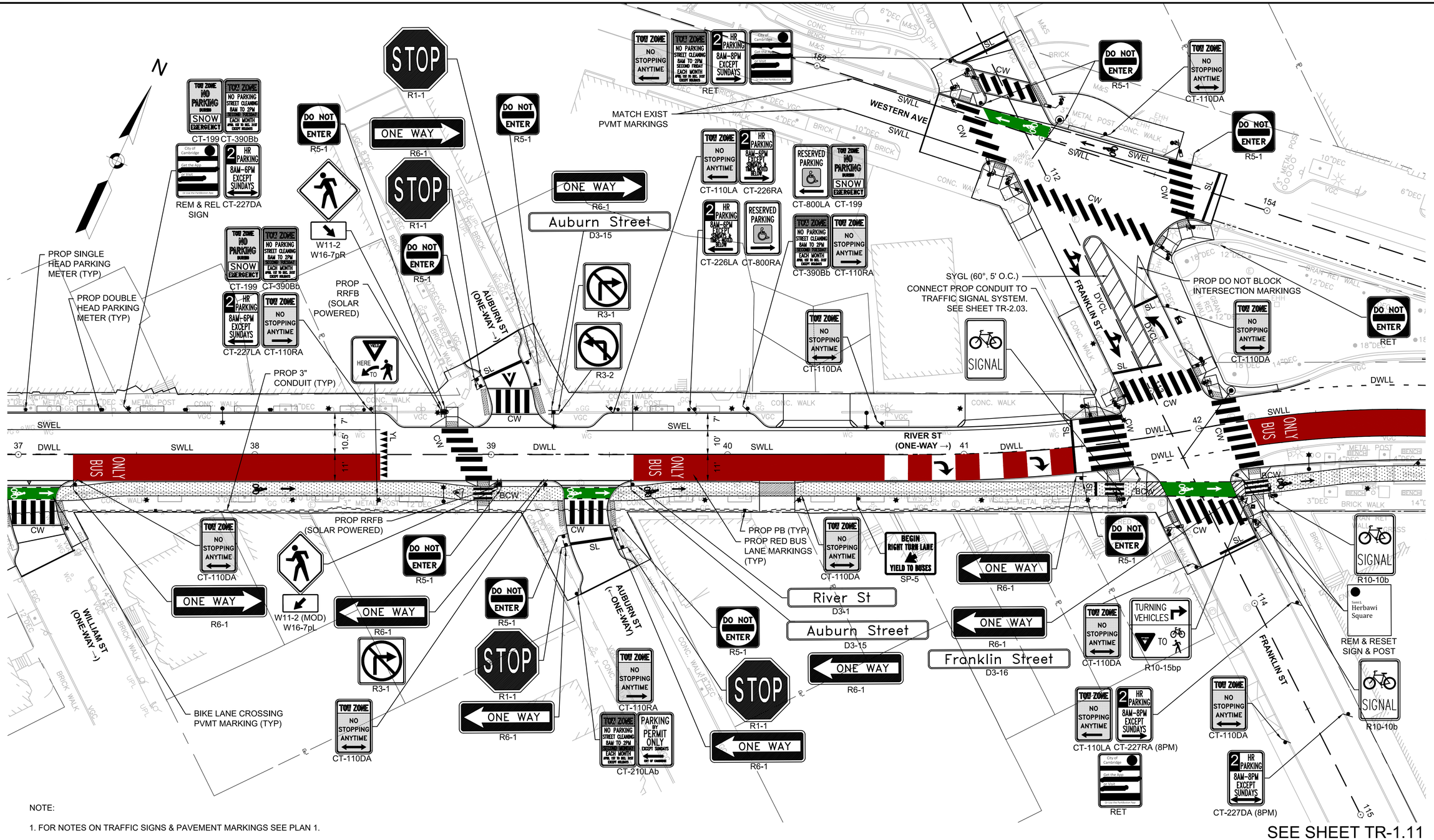

NOTE:

1. FOR NOTES ON TRAFFIC SIGNS & PAVEMENT MARKINGS SEE PLAN 1.

PLAN

0 20 50 100

SCALE: 1" = 20'

CONFORMED SET

HDR ENGINEERING, INC.
99 HIGH STREET, SUITE 2300
BOSTON, MASSACHUSETTS 02110–2378
(617) 357–7700

McMAHON TRANSPORTATION ENGINEERS & PLANNERS

COMMONWEALTH OF MASSACHUSETTS
CONOR MURPHY
CIVIL
No. 54506
REGISTERED PROFESSIONAL ENGINEER
8/5/2022

Scale	AS NOTED			
Date	MAY 2022			
Job No.	----			
Designed by	CPM			
Drawn by	JAV	0	CONFORMED SET	8/5/2022
Checked by	CPM	No.	Description	Date
Approved by	PV	REVISIONS		

THE WORKS — CAMBRIDGE DEPARTMENT OF PUBLIC WORKS

Client	CITY OF CAMBRIDGE, MA	Sheet TR-1.06
Project	RIVER STREET INFRASTRUCTURE AND STREETSCAPE PROJECT	Total Sheets 381
Drawing	**TRAFFIC SIGN & PAVEMENT MARKINGS PLAN 6**	File No.

8/12/2022 3:42:29 PM
File: I:\ENGIY16043.45 RIVER STREET\HDI\DWG\PLOT\7113XXX_TR(PLOT - TSPM).DWG Plotted:

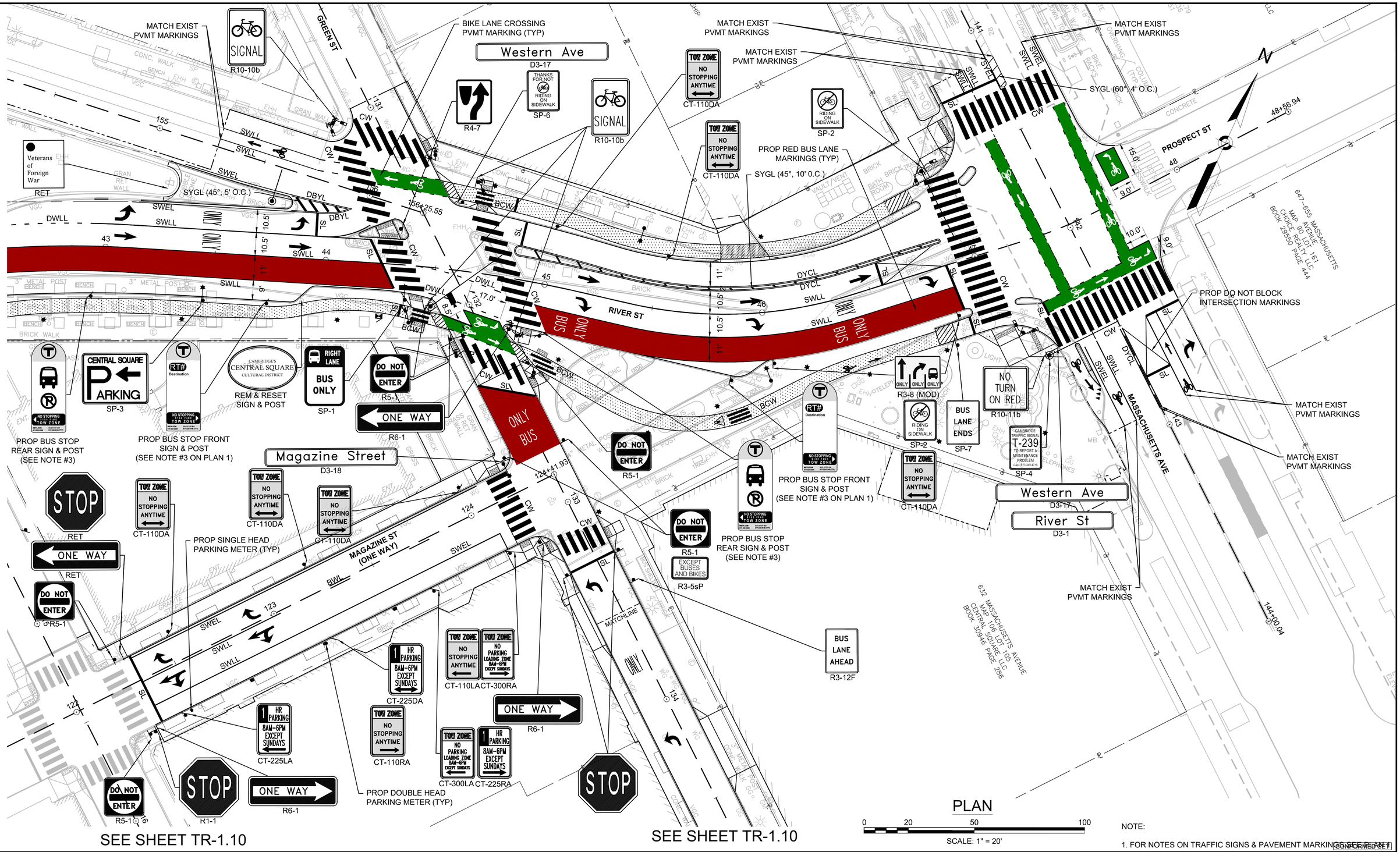

SEE SHEET TR-1.06

SEE SHEET TR-1.10

SEE SHEET TR-1.10

PLAN

0 20 50 100

SCALE: 1" = 20'

NOTE:

1. FOR NOTES ON TRAFFIC SIGNS & PAVEMENT MARKINGS SEE PLAN 1

CONFORMED SET

File: I:\ENG\Y16043.45 RIVER STREET\HD\DWG\PLOT\7113XXX_TR(PLOT - TSPM).DWG Plotted: 8/12/2022 3:42:39 PM

HDR ENGINEERING, INC.
99 HIGH STREET, SUITE 2300
BOSTON, MASSACHUSETTS 02110-2378
(617) 357-7700

McMAHON TRANSPORTATION ENGINEERS & PLANNERS

COMMONWEALTH OF MASSACHUSETTS CONOR MURPHY CIVIL No. 54506 REGISTERED PROFESSIONAL ENGINEER 8/5/2022

Scale	AS NOTED			
Date	MAY 2022			
Job No.	----			
Designed by	CPM			
Drawn by	JAV	0	CONFORMED SET	8/5/2022
Checked by	CPM	No.	Description	Date
Approved by	PV		REVISIONS	

THE WORKS CAMBRIDGE DEPARTMENT OF PUBLIC

Client	CITY OF CAMBRIDGE, MA	Sheet TR-1.07
Project	RIVER STREET INFRASTRUCTURE AND STREETSCAPE PROJECT	Total Sheets 381
Drawing	TRAFFIC SIGN & PAVEMENT MARKINGS PLAN 7	File No.

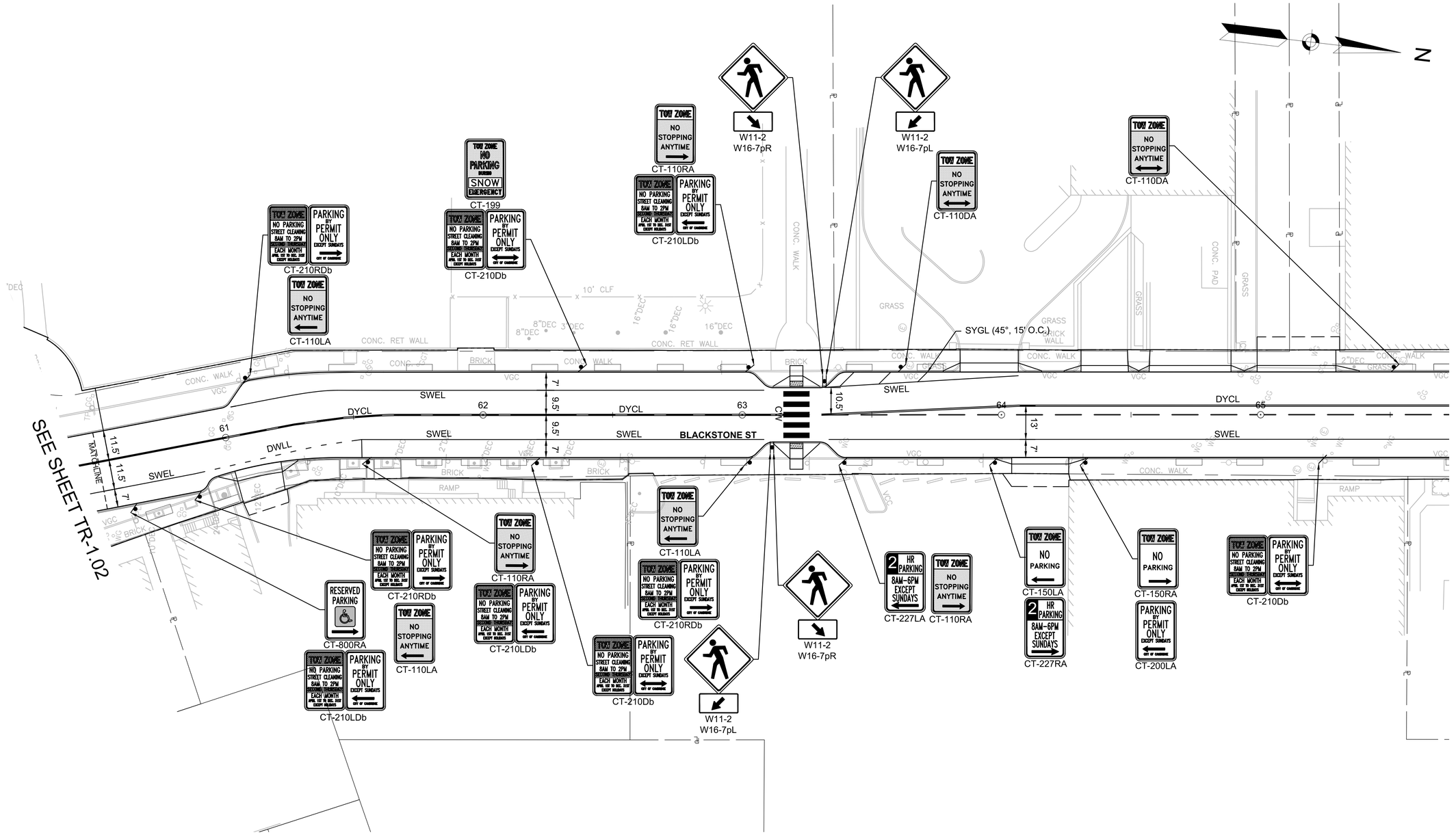

NOTE:

1. FOR NOTES ON TRAFFIC SIGNS & PAVEMENT MARKINGS SEE PLAN 1.

PLAN

0 20 50 100

SCALE: 1" = 20'

CONFORMED SET

HDR ENGINEERING, INC.
99 HIGH STREET, SUITE 2300
BOSTON, MASSACHUSETTS 02110–2378
(617) 357–7700

McMAHON TRANSPORTATION ENGINEERS & PLANNERS

COMMONWEALTH OF MASSACHUSETTS
CONOR MURPHY
CIVIL
No. 54506
REGISTERED PROFESSIONAL ENGINEER
8/5/2022

Scale	AS NOTED			
Date	MAY 2022			
Job No.	----			
Designed by	CPM			
Drawn by	JAV	0	CONFORMED SET	8/5/2022
Checked by	CPM	No.	Description	Date
Approved by	PV	REVISIONS		

THE WORKS — CAMBRIDGE DEPARTMENT OF PUBLIC WORKS

Client	CITY OF CAMBRIDGE, MA	Sheet	TR-1.08
Project	RIVER STREET INFRASTRUCTURE AND STREETSCAPE PROJECT	Total Sheets	381
Drawing	**TRAFFIC SIGN & PAVEMENT MARKINGS PLAN 8**	File No.	

8/12/2022 3:42:49 PM
File: I:\ENGIY16043.45 RIVER STREET\HD\DWG\PLOT\7113XXX_TR(PLOT - TSPM).DWG Plotted:

SEE SHEET TR-1.08

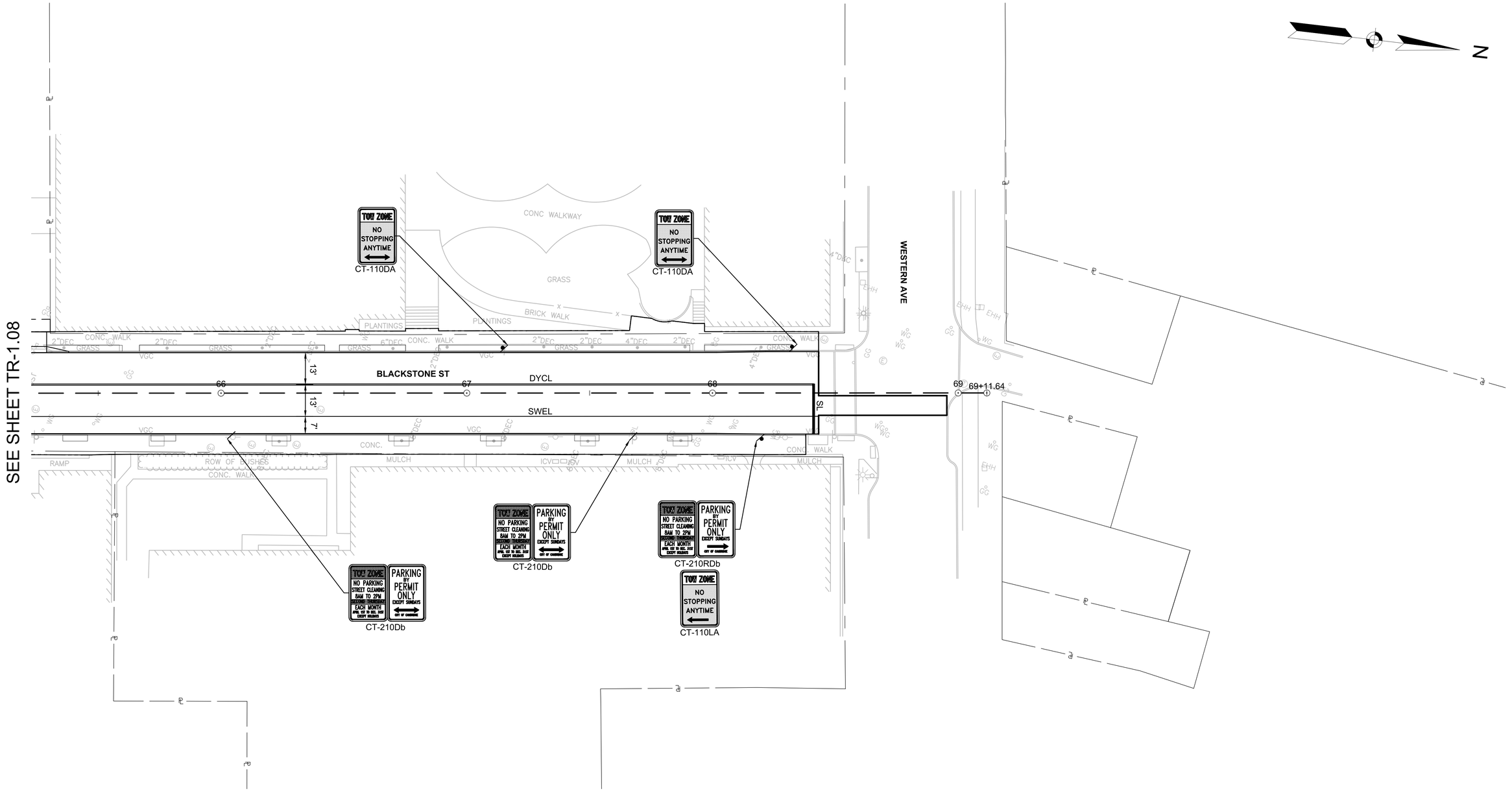

NOTE:

1. FOR NOTES ON TRAFFIC SIGNS & PAVEMENT MARKINGS SEE PLAN 1.

PLAN

0 20 50 100

SCALE: 1" = 20'

CONFORMED SET

HDR ENGINEERING, INC.
99 HIGH STREET, SUITE 2300
BOSTON, MASSACHUSETTS 02110–2378
(617) 357–7700

McMAHON TRANSPORTATION ENGINEERS & PLANNERS

COMMONWEALTH OF MASSACHUSETTS
CONOR MURPHY
CIVIL
No. 54506
REGISTERED PROFESSIONAL ENGINEER
8/5/2022

Scale	AS NOTED			
Date	MAY 2022			
Job No.	----			
Designed by	CPM			
Drawn by	JAV	0	CONFORMED SET	8/5/2022
Checked by	CPM	No.	Description	Date
Approved by	PV	REVISIONS		

THE WORKS — CAMBRIDGE DEPARTMENT OF PUBLIC WORKS

Client	CITY OF CAMBRIDGE, MA	Sheet	TR-1.09
Project	RIVER STREET INFRASTRUCTURE AND STREETSCAPE PROJECT	Total Sheets	381
Drawing	**TRAFFIC SIGN & PAVEMENT MARKINGS PLAN 9**	File No.	

8/12/2022 3:42:58 PM
File: I:\ENG\Y16043.45 RIVER STREET\HD\DWG\PLOT\7113XXX_TR(PLOT - TSPM).DWG Plotted:

SEE SHEET TR-1.07

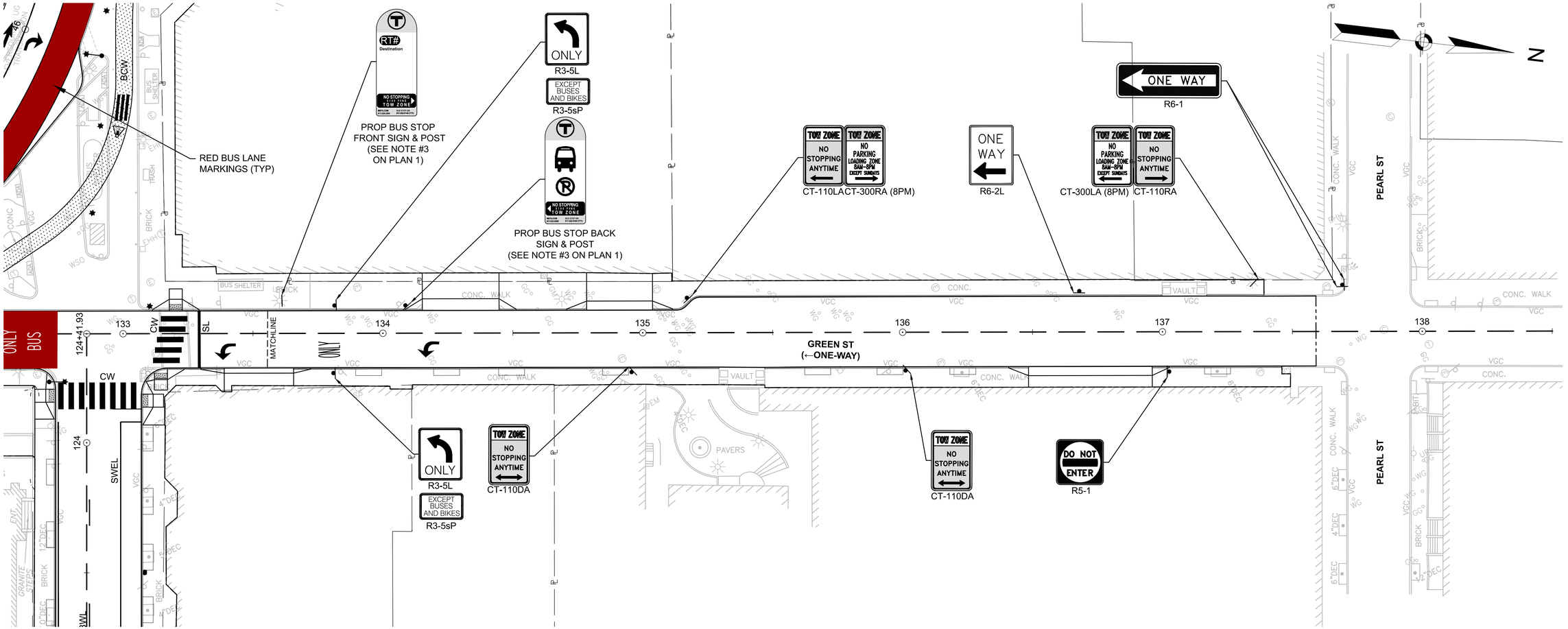

NOTE:

1. FOR NOTES ON TRAFFIC SIGNS & PAVEMENT MARKINGS SEE PLAN 1.
2. RETAIN ALL SIGNS ON PEARL STREET UNLESS OTHERWISE NOTED.

PLAN

0 20 50 100

SCALE: 1" = 20'

CONFORMED SET

HDR ENGINEERING, INC.
99 HIGH STREET, SUITE 2300
BOSTON, MASSACHUSETTS 02110–2378
(617) 357–7700

McMAHON TRANSPORTATION ENGINEERS & PLANNERS

COMMONWEALTH OF MASSACHUSETTS — CONOR MURPHY CIVIL No. 54506 REGISTERED PROFESSIONAL ENGINEER — 8/5/2022

Scale	AS NOTED			
Date	MAY 2022			
Job No.	----			
Designed by	CPM			
Drawn by	JAV	0	CONFORMED SET	8/5/2022
Checked by	CPM	No.	Description	Date
Approved by	PV	REVISIONS		

THE WORKS — CAMBRIDGE DEPARTMENT OF PUBLIC WORKS

Client	CITY OF CAMBRIDGE, MA	Sheet	TR-1.10
Project	RIVER STREET INFRASTRUCTURE AND STREETSCAPE PROJECT	Total Sheets	381
Drawing	**TRAFFIC SIGN & PAVEMENT MARKINGS PLAN 10**	File No.	

File: I:\ENGIY\16043.45 RIVER STREET\HD\DWG\PLOT\7113XXX_TR(PLOT - TSPM).DWG Plotted: 8/12/2022 3:43:09 PM

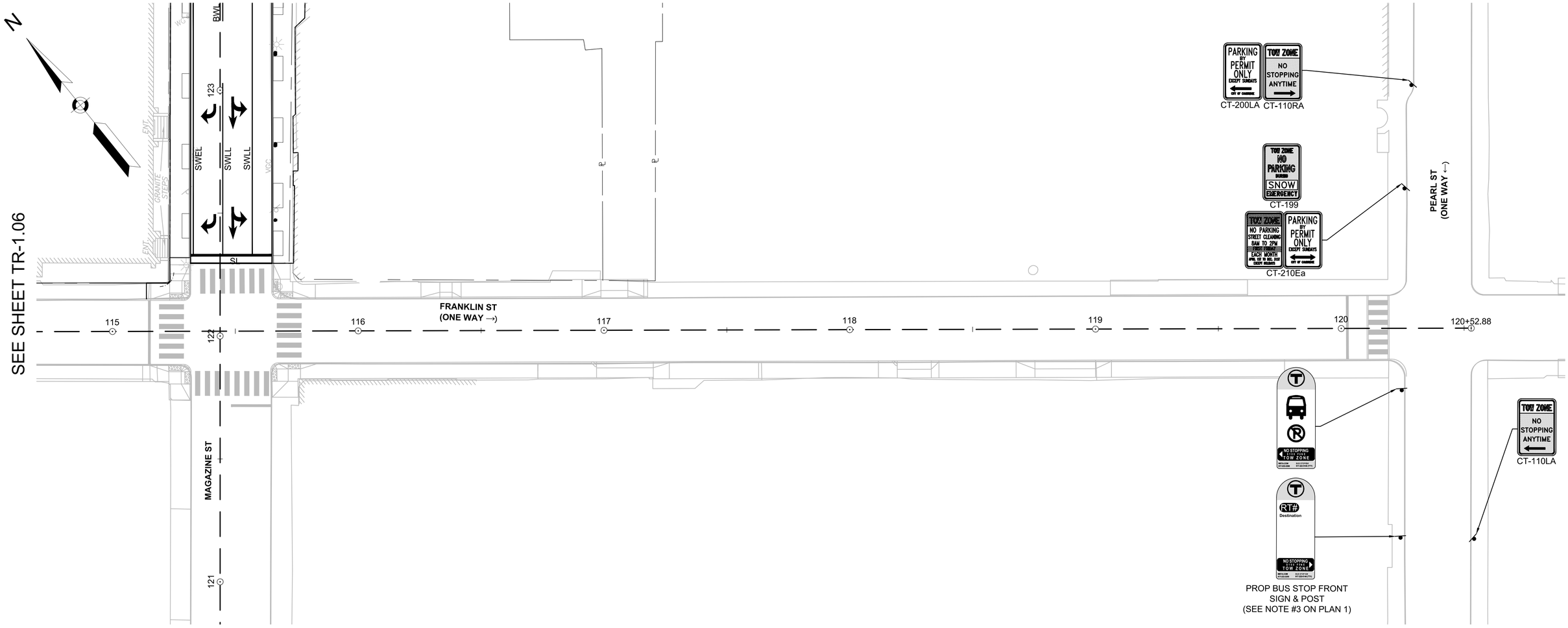

NOTE:

1. FOR NOTES ON TRAFFIC SIGNS & PAVEMENT MARKINGS SEE PLAN 1.
2. RETAIN ALL SIGNAGE ALONG FRANKLIN ST BETWEEN MAGAZINE ST & PEARL ST.
3. RETAIN ALL SIGNS ON PEARL STREET UNLESS OTHERWISE NOTED.

PLAN

0 20 50 100

SCALE: 1" = 20'

CONFORMED SET

HDR ENGINEERING, INC.
99 HIGH STREET, SUITE 2300
BOSTON, MASSACHUSETTS 02110–2378
(617) 357–7700

McMAHON TRANSPORTATION ENGINEERS & PLANNERS

COMMONWEALTH OF MASSACHUSETTS
CONOR MURPHY
CIVIL
No. 54506
REGISTERED PROFESSIONAL ENGINEER
8/5/2022

Scale	AS NOTED			
Date	MAY 2022			
Job No.	----			
Designed by	CPM			
Drawn by	JAV	0	CONFORMED SET	8/5/2022
Checked by	CPM	No.	Description	Date
Approved by	PV	REVISIONS		

CAMBRIDGE DEPARTMENT OF PUBLIC WORKS
THE WORKS

Client	CITY OF CAMBRIDGE, MA	Sheet	TR-1.11
Project	RIVER STREET INFRASTRUCTURE AND STREETSCAPE PROJECT	Total Sheets	381
Drawing	**TRAFFIC SIGN & PAVEMENT MARKINGS PLAN 11**	File No.	

8/12/2022 3:43:18 PM

File: I:\ENG\Y16043.45 RIVER STREET\HD\DWG\PLOT\7113XXX_TR(PLOT - TSPM).DWG Plotted:

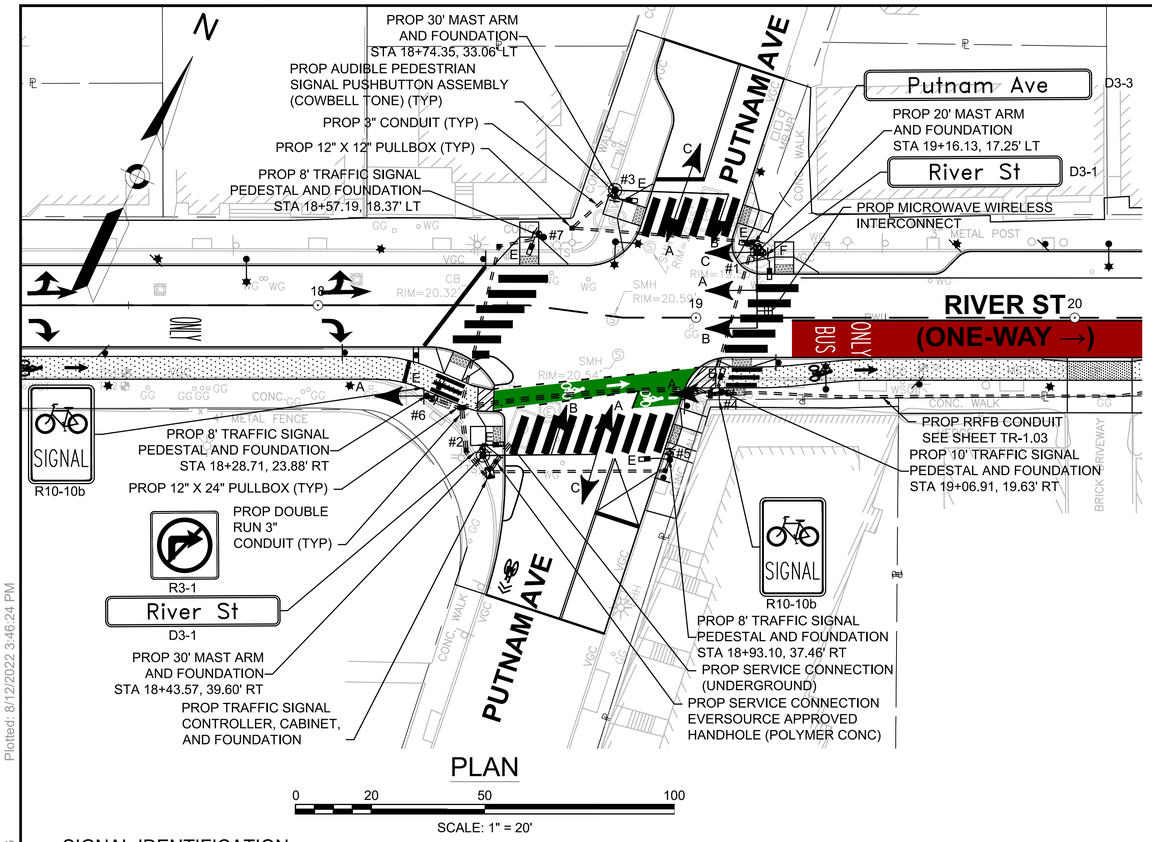

PLAN

0 20 50 100

SCALE: 1" = 20'

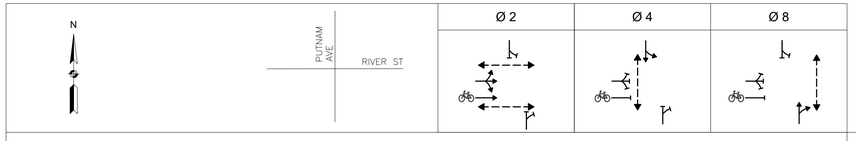

SEQUENCE AND TIMING FOR ACTUATED-COORDINATED CONTROL

STREET	DIRECTION	HOUSINGS	1	2	3	4	5	6	7	8	9	10	11	12	FLASH OP
RIVER STREET	EB	1A, 1C	R	G	Y	R	R	R	R	R	R	R	R	R	FY
RIVER STREET	EB	1B	~~R~~	~~FY~~	~~Y~~	~~R~~	~~R~~	~~R~~	~~R~~	~~R~~	~~R~~	~~R~~	~~R~~	~~R~~	~~FY~~
PUTNAM AVENUE	NB	3A, 3B	R	R	R	R	R	R	R	R	R	G	Y	R	FR
PUTNAM AVENUE	SB	2A, 2B, 3C	R	R	R	R	R	G	Y	R	R	R	R	R	FR
RIVER STREET BIKE SIGNAL	EB	4A, 6A	G	G	Y	R	R	R	R	R	R	R	R	R	FR
PEDESTRIAN	EB-WB	1E-3E, 2E-5E	W	W	FDW	DW	DW	DW	DW	DW	DW	DW	DW	DW	OUT
PEDESTRIAN	NB-SB	6E-7E	DW	DW	DW	DW	W	W	FDW	DW	DW	DW	DW	DW	OUT
PEDESTRIAN	NB-SB	1F-4E	DW	DW	DW	DW	DW	DW	DW	DW	W	W	FDW	DW	OUT
TIMING IN SECONDS															
MINIMUM GREEN (INITIAL)				10				5				5			
LEADING BIKE INTERVAL			5				-				-				
PASSAGE TIME (VEHICLE)				3				3				3			
MAXIMUM 1 (ALL OTHER TIMES)				36				25				25			
MAXIMUM 2 (DIAL 1/DIAL 2 OPERATION)				36				25				25			
YELLOW CLEARANCE					3.0				3.0				3.0		
RED CLEARANCE						2.0				2.0				2.0	
WALK (W)			5	7			5	7			5	7			
PEDESTRIAN CLEARANCE					13	3			12	3			12	3	
RECALL			MAX				MAX				MAX				
MEMORY			NON-LOCK				NON-LOCK				NON-LOCK				

TIME OF DAY PLAN

PROGRAM	DAY	TIME	OFFSET	CYCLE LENGTH	Ø 2	Ø 4	Ø 8
DIAL 1	MON-FRI	0600-1000	46	70	41	29	29
DIAL 2	MON-FRI	1500-2000	42	70	40	30	30

TECHNICAL NOTES

1. PEDESTRIAN PHASES REST IN WALK.
2. RUN ALL FDW(S) THROUGH YELLOW INTERVALS.

SIGNAL IDENTIFICATION

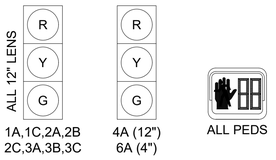

NOTES:
1. ALL SIGNAL HOUSINGS SHALL BE EQUIPPED WITH TUNNEL VISORS.
2. ALL SIGNAL HEADS MOUNTED OVERHEAD SHALL BE EQUIPPED WITH 5" BACKPLATES (NON-LOUVERED). BACKPLATES SHALL NOT HAVE RETROREFLECTIVE BORDERS.
3. PEDESTRIAN SIGNALS SHALL BE ONE SECTION, DUAL DISPLAY, 16" LED.
4. ALL 4" BICYCLE SIGNAL HEADS SHALL BE MOUNTED AT A HEIGHT OF 4.5' FROM BOTTOM OF SIGNAL HEAD TO TOP OF SIDEWALK.

NEMA DUAL RING PHASING NOTES

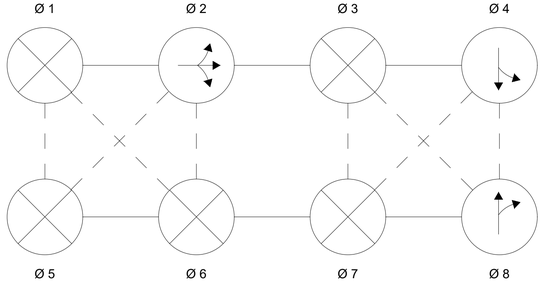

1. PHASES ASSOCIATED BY A SOLID LINE SHALL NOT OPERATE CONCURRENTLY.
2. PHASES ASSOCIATED BY A DASHED LINE MAY OPERATE CONCURRENTLY.
3. THROUGH MOVEMENTS MAY INCLUDE RIGHT TURNS.
4. IF THE ASSIGNED RIGHT OF WAY FOR ANY TRAFFIC MOVEMENT IS TO REMAIN IN EFFECT DURING THE NEXT CALLED PHASE, THE SIGNAL INDICATIONS FOR THAT TRAFFIC MOVEMENT SHALL NOT CHANGE DURING THE CHANGE INTERVAL(S) UNLESS OTHERWISE NOTED.

PREFERENTIAL PHASING SEQUENCE

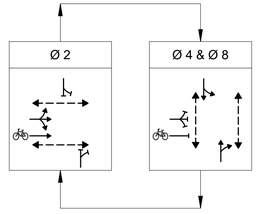

MAJOR ITEMS REQUIRED

PAY ITEM	QUANTITY	ITEM
2890.1	1	20' MAST ARM ASSEMBLY, BASE, & FOUNDATION (STEEL) WITH BLACK POWDER COAT
	2	30' MAST ARM ASSEMBLY, BASE, & FOUNDATION (STEEL) WITH BLACK POWDER COAT
	3	8' TRAFFIC SIGNAL POST, BASE, & FOUNDATION (STEEL) WITH BLACK POWDER COAT
	1	10' TRAFFIC SIGNAL POST, BASE, & FOUNDATION (STEEL) WITH BLACK POWDER COAT
	1	3 SECTION - 4" LENS SIGNAL HEAD
	10	3 SECTION - 12" LENS SIGNAL HEAD
	9	5" NON-LOUVERED BACKPLATE
	8	PEDESTRIAN HOUSING (16" LED) COUNTDOWN - SINGLE SECTION
	8	AUDIBLE PEDESTRIAN SIGNAL PUSHBUTTON ASSEMBLY (COWBELL TONE)
	1	TS2 TYPE 1 SIGNAL CONTROLLER (EAGLE SIEMENS M60), CABINET (TYPE M), AND FOUNDATION
	1	MICROWAVE WIRELESS INTERCONNECT
	1	ETHERNET SWITCH
	1	24 POSITION FIBER PATCH PANEL
	1	SERVICE CONNECTION (UNDERGROUND)
	1	GPS TIME CLOCK
	1	R&S SELECTED SIGNAL EQUIPMENT
2890.6	750 LF	3 INCH ELECTRICAL CONDUIT TYPE NM - PLASTIC (UL)
2890.7	9	PULL BOX 12"X12"
2890.8	2	PULL BOX 12"X24"
2890.9	1	SERVICE CONNECTION EVERSOURCE APPROVED HANDHOLE

PLUS ALL NECESSARY DUCT, CABLE, LABOR, MISCELLANEOUS MATERIAL AND EQUIPMENT TO COMPLETE THE INSTALLATION.

CONFORMED SET

HDR ENGINEERING, INC.
99 HIGH STREET, SUITE 2300
BOSTON, MASSACHUSETTS 02110-2378
(617) 357-7700

McMAHON TRANSPORTATION ENGINEERS & PLANNERS

CONOR MURPHY CIVIL No. 54506 REGISTERED PROFESSIONAL ENGINEER COMMONWEALTH OF MASSACHUSETTS
8/5/2022

Scale	AS NOTED				
Date	MAY 2022				
Job No.	----				
Designed by	CPM				
Drawn by	CPM	0	CONFORMED SET	8/5/2022	
Checked by	CPM	No.	Description	Date	
Approved by	PV	REVISIONS			

THE WORKS — CAMBRIDGE DEPARTMENT OF PUBLIC WORKS

Client	CITY OF CAMBRIDGE, MA	Sheet	TR-2.01
Project	RIVER STREET INFRASTRUCTURE AND STREETSCAPE PROJECT	Total Sheets	381
Drawing	**TRAFFIC SIGNAL LAYOUT PLAN 1 RIVER STREET AT PUTNAM AVENUE**	File No.	

Plotted: 8/12/2022 3:46:24 PM

File: I:\ENGIY\16043.45 RIVER STREET\HD\DWG\PLOT\7113XXX_TR(PLOT - SIGNAL - PUTNAM).DWG

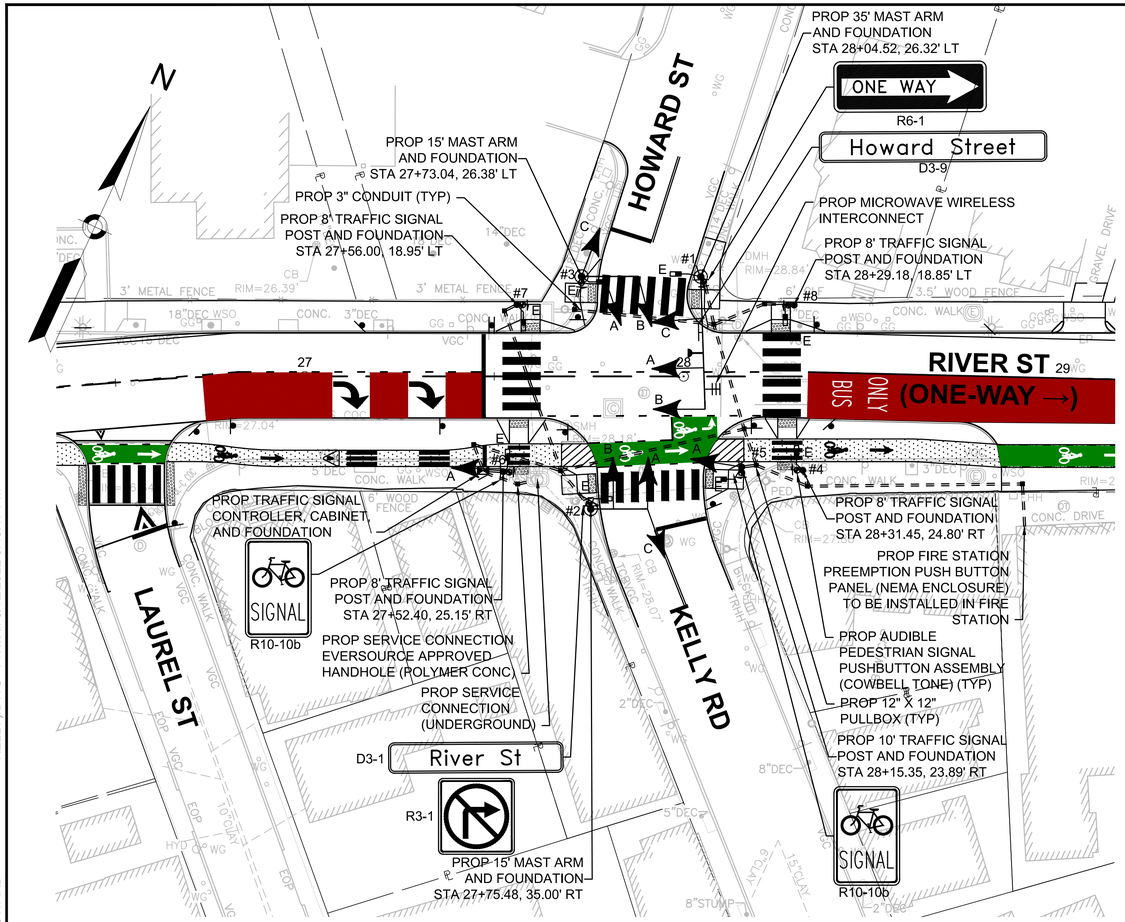

PLAN

0 20 50 100

SCALE: 1" = 20'

	HOWARD ST / RIVER ST / KELLY RD	Ø 2	Ø 4	Ø 8	PREEMPT Ø A

SEQUENCE AND TIMING FOR ACTUATED-COORDINATED CONTROL

STREET	DIRECTION	HOUSINGS	1	2	3	4	5	6	7	8	9	10	11	12	FLASH OP	13	14	15
RIVER STREET	EB	1A, 1C	R	G	Y	R	R	R	R	R	R	R	R	R	FY	R	R	R
RIVER STREET	EB	1B	~~R~~	~~FY~~	~~Y~~	~~R~~	~~R~~	~~R~~	~~R~~	~~R~~	~~R~~	~~R~~	~~R~~	~~R~~	~~FY~~	~~R~~	~~R~~	~~R~~
KELLY ROAD	NB	3A, 3B	R	R	R	R	R	R	R	R	R	G	Y	R	FR	R	R	R
HOWARD ST	SB	2A, 2B, 3C	R	R	R	R	R	G	Y	R	R	R	R	R	FR	R	R	R
RIVER STREET BIKE SIGNAL	EB	5A, 6A	G	G	Y	R	R	R	R	R	R	R	R	R	FR	R	R	R
PEDESTRIAN	EB-WB	3E-1E, 2E-5E	W	W	FDW	DW	DW	DW	DW	DW	DW	DW	DW	DW	OUT	DW	DW	DW
PEDESTRIAN	NB-SB	6E-7E	DW	DW	DW	DW	W	W	FDW	DW	DW	DW	DW	DW	OUT	DW	DW	DW
PEDESTRIAN	NB-SB	4E-9E	DW	DW	DW	DW	DW	DW	DW	DW	W	W	FDW	DW	OUT	DW	DW	DW
TIMING IN SECONDS																		
MINIMUM GREEN (INITIAL)				10				5				5				30		
LEADING BIKE INTERVAL			5				-				-					-		
PASSAGE TIME (VEHICLE)				3				3				3				-		
MAXIMUM 1 (ALL OTHER TIMES)				40				20				20				30		
MAXIMUM 2 (DIAL 1/DIAL 2 OPERATION)				40				20				20				30		
YELLOW CLEARANCE					3.0				3.0				3.0				3.0	
RED CLEARANCE						2.0				2.0				2.0				2.0
WALK (W)			5	7			5	7			5	7						
PEDESTRIAN CLEARANCE					8	3			10	3			10	3				
RECALL				MAX				MAX				MAX						
MEMORY				NON-LOCK				NON-LOCK				NON-LOCK						

TIME OF DAY PLAN

PROGRAM	DAY	TIME	OFFSET	CYCLE LENGTH	Ø 2	Ø 4	Ø 8
DIAL 1	MON-FRI	0600-1000	63	70	45	25	25
DIAL 2	MON-FRI	1500-2000	61	70	45	25	25

TECHNICAL NOTES

1. PEDESTRIAN PHASES REST IN WALK.
2. RUN ALL FDW(S) THROUGH YELLOW INTERVALS.

SIGNAL IDENTIFICATION

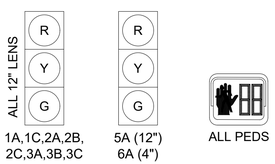

NOTES:

1. ALL SIGNAL HOUSINGS SHALL BE EQUIPPED WITH TUNNEL VISORS.
2. ALL SIGNAL HEADS MOUNTED OVERHEAD SHALL BE EQUIPPED WITH 5" BACKPLATES (NON-LOUVERED). BACKPLATES SHALL NOT HAVE RETROREFLECTIVE BORDERS.
3. PEDESTRIAN SIGNALS SHALL BE ONE SECTION, DUAL DISPLAY, 16" LED.
4. ALL 4" BICYCLE SIGNAL HEADS SHALL BE MOUNTED AT A HEIGHT OF 4.5' FROM BOTTOM OF SIGNAL HEAD TO TOP OF SIDEWALK.

NEMA DUAL RING PHASING NOTES

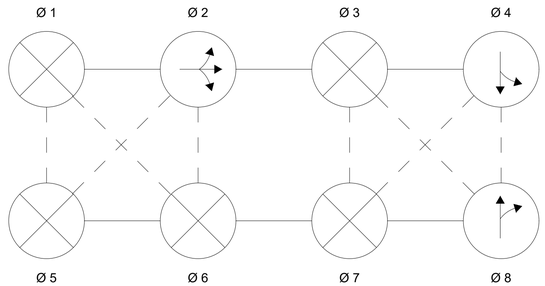

1. PHASES ASSOCIATED BY A SOLID LINE SHALL NOT OPERATE CONCURRENTLY.
2. PHASES ASSOCIATED BY A DASHED LINE MAY OPERATE CONCURRENTLY.
3. THROUGH MOVEMENTS MAY INCLUDE RIGHT TURNS.
4. IF THE ASSIGNED RIGHT OF WAY FOR ANY TRAFFIC MOVEMENT IS TO REMAIN IN EFFECT DURING THE NEXT CALLED PHASE, THE SIGNAL INDICATIONS FOR THAT TRAFFIC MOVEMENT SHALL NOT CHANGE DURING THE CHANGE INTERVAL(S) UNLESS OTHERWISE NOTED.

PREFERENTIAL PHASING SEQUENCE

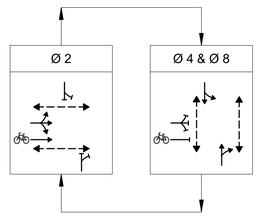

MAJOR ITEMS REQUIRED

PAY ITEM	QUANTITY	ITEM
2890.2	2	15' MAST ARM ASSEMBLY, BASE, & FOUNDATION (STEEL) WITH BLACK POWDER COAT
	1	35' MAST ARM ASSEMBLY, BASE, & FOUNDATION (STEEL) WITH BLACK POWDER COAT
	4	8' TRAFFIC SIGNAL POST, BASE, & FOUNDATION (STEEL) WITH BLACK POWDER COAT
	1	10' TRAFFIC SIGNAL POST, BASE, & FOUNDATION (STEEL) WITH BLACK POWDER COAT
	1	3 SECTION - 4" LENS SIGNAL HEAD
	10	3 SECTION - 12" LENS SIGNAL HEAD
	7	5" NON-LOUVERED BACKPLATE
	8	PEDESTRIAN HOUSING (16" LED) COUNTDOWN - SINGLE SECTION
	8	AUDIBLE PEDESTRIAN SIGNAL PUSHBUTTON ASSEMBLY (COWBELL TONE)
	1	TS2 TYPE 1 SIGNAL CONTROLLER (EAGLE SIEMENS M60), CABINET (TYPE M), AND FOUNDATION
	1	MICROWAVE WIRELESS INTERCONNECT
	1	ETHERNET SWITCH
	1	24 POSITION FIBER PATCH PANEL
	1	FIRE DEPARTMENT EMERGENCY PREEMPTION PUSHBUTTON PANEL (NEMA ENCLOSURE)
	1	SERVICE CONNECTION (UNDERGROUND)
	1	GPS TIME CLOCK
	1	R&S SELECTED SIGNAL EQUIPMENT
2890.6	375 LF	3 INCH ELECTRICAL CONDUIT TYPE NM - PLASTIC (UL)
2890.7	10	PULL BOX 12"X12"
2890.9	1	SERVICE CONNECTION EVERSOURCE APPROVED HANDHOLE
PLUS ALL NECESSARY DUCT, CABLE, LABOR, MISCELLANEOUS MATERIAL AND EQUIPMENT TO COMPLETE THE INSTALLATION.		

CONFORMED SET

HDR ENGINEERING, INC.
99 HIGH STREET, SUITE 2300
BOSTON, MASSACHUSETTS 02110-2378
(617) 357-7700

McMAHON TRANSPORTATION ENGINEERS & PLANNERS

COMMONWEALTH OF MASSACHUSETTS — CONOR MURPHY — CIVIL — No. 54506 — REGISTERED PROFESSIONAL ENGINEER
8/5/2022

Scale	AS NOTED				
Date	MAY 2022				
Job No.	----				
Designed by	CPM				
Drawn by	CPM	0	CONFORMED SET	8/5/2022	
Checked by	CPM	No.	Description	Date	
Approved by	PV	REVISIONS			

THE WORKS — CAMBRIDGE DEPARTMENT OF PUBLIC WORKS

Client	CITY OF CAMBRIDGE, MA	Sheet	TR-2.02
Project	RIVER STREET INFRASTRUCTURE AND STREETSCAPE PROJECT	Total Sheets	381
Drawing	**TRAFFIC SIGNAL LAYOUT PLAN 2** **RIVER STREET AT HOWARD STREET AND KELLY ROAD**	File No.	

File: I:\ENG\Y16043.45 RIVER STREET\HD\DWG\PLOT\7113XXX_TR(PLOT - SIGNAL - HOWARD KELLY).DWG Plotted: 8/12/2022 3:48:47 PM

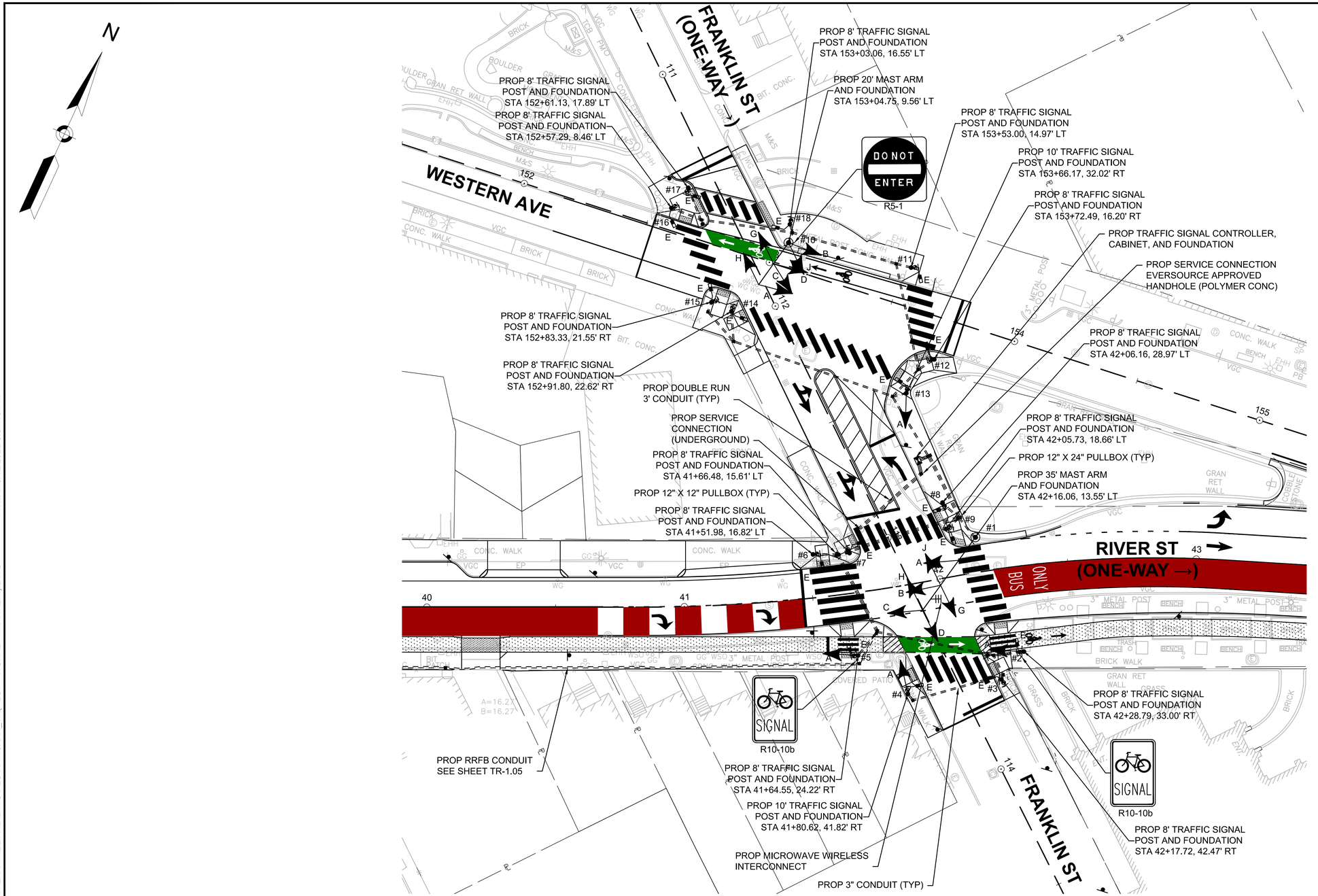

PLAN

0 20 50 100

SCALE: 1" = 20'

CONFORMED SET

HDR ENGINEERING, INC.
99 HIGH STREET, SUITE 2300
BOSTON, MASSACHUSETTS 02110-2378
(617) 357-7700

McMAHON
TRANSPORTATION ENGINEERS & PLANNERS

COMMONWEALTH OF MASSACHUSETTS
CONOR MURPHY
CIVIL
No. 54506
REGISTERED PROFESSIONAL ENGINEER
8/5/2022

Scale	AS NOTED			
Date	MAY 2022			
Job No.	----			
Designed by	CPM			
Drawn by	CPM	0	CONFORMED SET	8/5/2022
Checked by	CPM	No.	Description	Date
Approved by	PV	REVISIONS		

THE WORKS
CAMBRIDGE DEPARTMENT OF PUBLIC WORKS

Client	CITY OF CAMBRIDGE, MA	Sheet	TR-2.03
Project	RIVER STREET INFRASTRUCTURE AND STREETSCAPE PROJECT	Total Sheets	381
Drawing	**TRAFFIC SIGNAL LAYOUT PLAN 3** **RIVER STREET AT FRANKLIN STREET AND WESTERN AVENUE**	File No.	

File: I:\ENGIY16043.45 RIVER STREET\HD\DWG\PLOT\7113XXX_TR(PLOT - SIGNAL - FRANKLIN).DWG
Plotted: 8/12/2022 3:51:13 PM

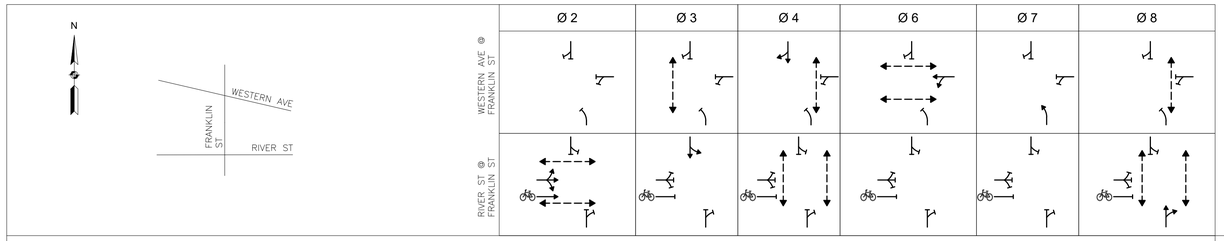

SEQUENCE AND TIMING FOR ACTUATED-COORDINATED CONTROL

STREET	DIRECTION	HOUSINGS	1	2	3	4	5	6	7	9	10	11	12	13	14	15	16	17	18	19	20	21	22	FLASH OP
RIVER STREET	EB	1A, 1B	R	G	Y	R	R	R	R	R	R	R	R	R	R	R	R	R	R	R	R	R	R	FY
RIVER STREET	EB	1C	~~R~~	~~FY~~	~~Y~~	~~R~~	~~R~~	~~R~~	~~R~~	~~R~~	~~R~~	~~R~~	~~R~~	~~R~~	~~R~~	~~R~~	~~R~~	~~R~~	~~R~~	~~R~~	~~R~~	~~R~~	~~R~~	~~FY~~
WESTERN AVENUE	WB	10A, 10B, 10J	R	R	R	R	R	R	R	R	R	R	R	G	Y	R	R	R	R	R	R	R	R	FY
FRANKLIN STREET (AT RIVER ST)	NB	1D, 1G	R	R	R	R	R	R	R	R	R	R	R	R	R	R	R	R	R	R	G	Y	R	FR
FRANKLIN STREET (AT RIVER ST)	SB	1J, 1H, 4A	R	R	R	R	G	Y	R	R	R	R	R	R	R	R	R	R	R	R	R	R	R	FR
FRANKLIN STREET (AT WESTERN AVE)	NB	10C, 10D, 13A	~~R~~	~~R~~	~~R~~	~~R~~	~~R~~	~~R~~	~~R~~	~~R~~	~~R~~	~~R~~	~~R~~	~~R~~	~~R~~	~~R~~	~~G~~	~~Y~~	~~R~~	~~R~~	~~R~~	~~R~~	~~R~~	~~FR~~
FRANKLIN STREET (AT WESTERN AVE)	SB	10G, 10H	R	R	R	R	R	R	R	G	Y	R	R	R	R	R	R	R	R	R	R	R	R	FR
RIVER STREET BIKE SIGNAL	EB	2A, 5A	G	G	Y	R	R	R	R	R	R	R	R	R	R	R	R	R	R	R	R	R	R	FR
PEDESTRIAN (RIVER ST)	EB-WB	3E-4E, 7E-8E	W	W	FDW	DW	DW	DW	DW	DW	DW	DW	DW	DW	DW	DW	DW	DW	DW	DW	DW	DW	DW	OUT
PEDESTRIAN (WESTERN AVE)	EB-WB	13E-14E,17E-18E	DW	DW	DW	DW	DW	DW	DW	DW	DW	DW	W	W	FDW	DW	DW	DW	DW	DW	DW	DW	DW	OUT
PEDESTRIAN (RIVER ST)	NB-SB	5E-6E	DW	DW	DW	DW	DW	DW	DW	W	W	W	DW	DW	DW	DW	DW	DW	DW	W	W	FDW	DW	OUT
PEDESTRIAN (RIVER ST)	NB-SB	1E-2E	DW	DW	DW	DW	DW	DW	DW	W	W	W	DW	DW	DW	DW	DW	DW	DW	W	W	FDW	DW	OUT
PEDESTRIAN (WESTERN AVE)	NB-SB	11E-12E	DW	DW	DW	DW	DW	DW	DW	W	W	W	DW	DW	DW	DW	DW	DW	DW	W	W	FDW	DW	OUT
PEDESTRIAN (WESTERN AVE)	NB-SB	15E-16E	DW	DW	DW	DW	W	FDW	DW	DW	DW	DW	DW	DW	DW	DW	DW	DW	DW	DW	DW	DW	DW	OUT
TIMING IN SECONDS																								
MINIMUM GREEN (INITIAL)				10			5			5				10			5				5			
LEADING BIKE INTERVAL			5																					
PASSAGE TIME (VEHICLE)				3			3			3				3			3				3			
MAXIMUM 1 (ALL OTHER TIMES)				33			13			9				33			13				9			
MAXIMUM 2 (DIAL 1/DIAL 2/DIAL 3 OPERATION)				45			15			11				45			16				12			
YELLOW CLEARANCE					3.0			3.0			3.0				3.0			3.0					3.0	
RED CLEARANCE						2.0			1.5			6.0				2.0			3.0				7.0	
WALK (W)			5	7			7			9	3	6	5	7							1			
PEDESTRIAN CLEARANCE					10	3		8	3						18	3						13	3	
RECALL			MAX				MAX			MAX			MAX				MAX			MAX				
MEMORY			NON-LOCK				NON-LOCK			NON-LOCK			NON-LOCK				NON-LOCK			NON-LOCK				

TIME OF DAY PLAN

PROGRAM	DAY	TIME	OFFSET	CYCLE LENGTH	Ø 2	Ø 3	Ø 4	Ø 6	Ø 7	Ø 8
DIAL 1	MON-FRI	1000-1500 2000-0600	35	75	38	18	18	38	19	19
DIAL 2	MON-FRI	0600-1000	39	90	48	20	20	48	22	22
DIAL 3	MON-FRI	1500-2000	32	90	50	18	18	50	22	22

TECHNICAL NOTES

1.	PEDESTRIAN PHASES REST IN WALK.
2.	RUN ALL FDW(S) THROUGH YELLOW INTERVALS.
3.	PHASE 4 RED CLEARANCE IS EXTENDED TO CLEAR FRANKLIN STREET SOUTHBOUND LEFT TURNS ONTO RIVER STREET.
4.	PHASE 8 RED CLEARANCE IS EXTENDED TO CLEAR FRANKLIN STREET NORTHBOUND LEFT TURNS ONTO WESTERN AVENUE.

NEMA DUAL RING PHASING NOTES

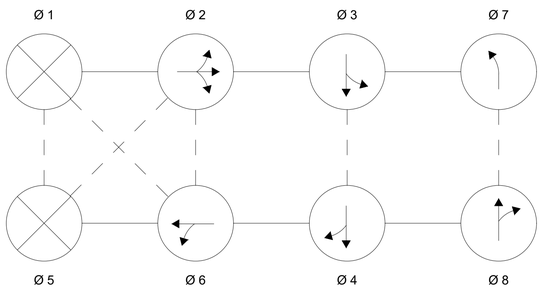

1. PHASES ASSOCIATED BY A SOLID LINE SHALL NOT OPERATE CONCURRENTLY.
2. PHASES ASSOCIATED BY A DASHED LINE MAY OPERATE CONCURRENTLY.
3. THROUGH MOVEMENTS MAY INCLUDE RIGHT TURNS.
4. IF THE ASSIGNED RIGHT OF WAY FOR ANY TRAFFIC MOVEMENT IS TO REMAIN IN EFFECT DURING THE NEXT CALLED PHASE, THE SIGNAL INDICATIONS FOR THAT TRAFFIC MOVEMENT SHALL NOT CHANGE DURING THE CHANGE INTERVAL(S) UNLESS OTHERWISE NOTED.

PREFERENTIAL PHASING SEQUENCE

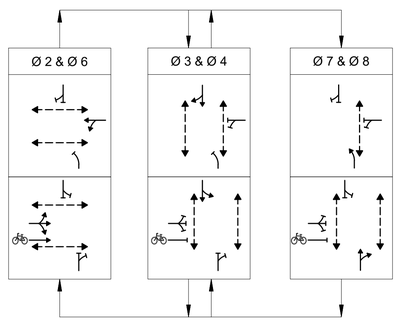

MAJOR ITEMS REQUIRED

PAY ITEM	QUANTITY	ITEM
2890.3	1	20' MAST ARM ASSEMBLY, BASE, & FOUNDATION (STEEL) WITH BLACK POWDER COAT
	1	35' MAST ARM ASSEMBLY, BASE, & FOUNDATION (STEEL) WITH BLACK POWDER COAT
	14	8' TRAFFIC SIGNAL POST, BASE, & FOUNDATION (STEEL) WITH BLACK POWDER COAT
	2	10' TRAFFIC SIGNAL POST, BASE, & FOUNDATION (STEEL) WITH BLACK POWDER COAT
	1	3 SECTION - 4" LENS SIGNAL HEAD
	18	3 SECTION - 12" LENS SIGNAL HEAD
	11	5" NON-LOUVERED BACKPLATE
	16	PEDESTRIAN HOUSING (16" LED) COUNTDOWN - SINGLE SECTION
	16	AUDIBLE PEDESTRIAN SIGNAL PUSHBUTTON ASSEMBLY (COWBELL TONE)
	1	TS2 TYPE 1 SIGNAL CONTROLLER (EAGLE SIEMENS M60), CABINET (TYPE M), AND FOUNDATION
	1	MICROWAVE WIRELESS INTERCONNECT
	1	ETHERNET SWITCH
	1	24 POSITION FIBER PATCH PANEL
	1	SERVICE CONNECTION (UNDERGROUND)
	1	GPS TIME CLOCK
	1	R&S SELECTED SIGNAL EQUIPMENT
2890.6	1380 LF	3 INCH ELECTRICAL CONDUIT TYPE NM - PLASTIC (UL)
2890.7	14	PULL BOX 12"X12"
2890.8	4	PULL BOX 12"X24"
2890.9	1	SERVICE CONNECTION EVERSOURCE APPROVED HANDHOLE
PLUS ALL NECESSARY DUCT, CABLE, LABOR, MISCELLANEOUS MATERIAL AND EQUIPMENT TO COMPLETE THE INSTALLATION.		

SIGNAL IDENTIFICATION

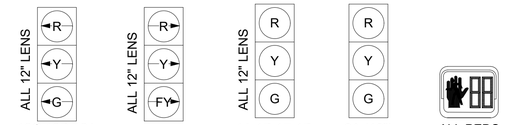

NOTES:
1. ALL SIGNAL HOUSINGS SHALL BE EQUIPPED WITH TUNNEL VISORS.
2. ALL SIGNAL HEADS MOUNTED OVERHEAD SHALL BE EQUIPPED WITH 5" BACKPLATES (NON-LOUVERED). BACKPLATES SHALL NOT HAVE RETROREFLECTIVE BORDERS.
3. PEDESTRIAN SIGNALS SHALL BE ONE SECTION, DUAL DISPLAY, 16" LED.
4. ALL 4" BICYCLE SIGNAL HEADS SHALL BE MOUNTED AT A HEIGHT OF 4.5' FROM BOTTOM OF SIGNAL HEAD TO TOP OF SIDEWALK.

CONFORMED SET

HDR ENGINEERING, INC.
99 HIGH STREET, SUITE 2300
BOSTON, MASSACHUSETTS 02110–2378
(617) 357–7700

McMAHON TRANSPORTATION ENGINEERS & PLANNERS

COMMONWEALTH OF MASSACHUSETTS
CONOR MURPHY
CIVIL
No. 54506
REGISTERED PROFESSIONAL ENGINEER
8/5/2022

Scale	AS NOTED				
Date	MAY 2022				
Job No.	----				
Designed by	CPM				
Drawn by	CPM	0	CONFORMED SET	8/5/2022	
Checked by	CPM	No.	Description	Date	
Approved by	PV	REVISIONS			

THE WORKS — CAMBRIDGE DEPARTMENT OF PUBLIC WORKS

Client	CITY OF CAMBRIDGE, MA	Sheet	TR-2.04
Project	RIVER STREET INFRASTRUCTURE AND STREETSCAPE PROJECT	Total Sheets	381
Drawing	**TRAFFIC SIGNAL DATA PLAN 3** **RIVER STREET AT FRANKLIN STREET AND WESTERN AVENUE**	File No.	

File: I:\ENGIY16043.45 RIVER STREET\HD\DWG\PLOT\7113XXX_TR(PLOT - SIGNAL - FRANKLIN).DWG
Plotted: 8/12/2022 3:51:20 PM

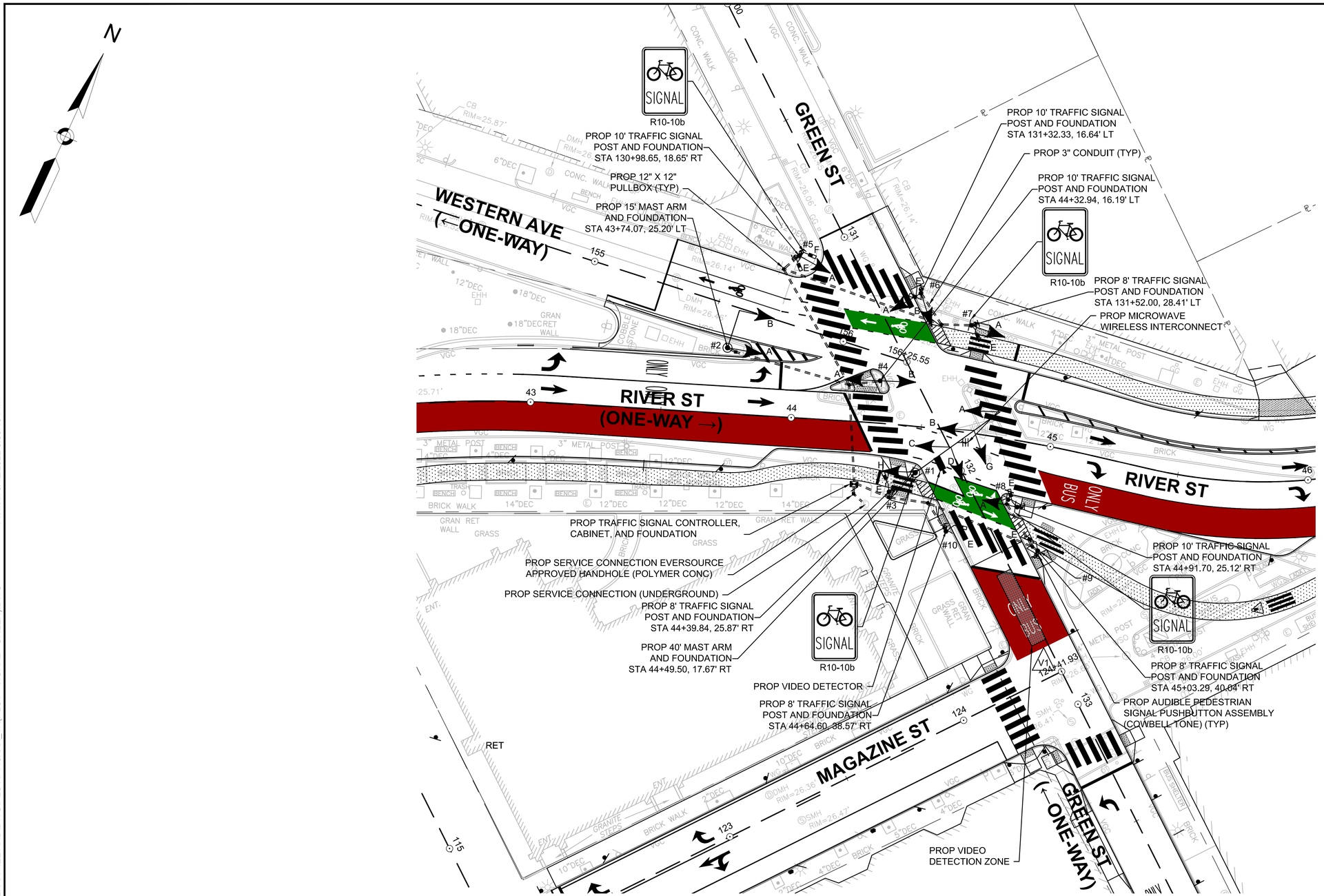

PLAN

0 20 50 100

SCALE: 1" = 20'

CONFORMED SET

HDR ENGINEERING, INC.
99 HIGH STREET, SUITE 2300
BOSTON, MASSACHUSETTS 02110–2378
(617) 357–7700

McMAHON TRANSPORTATION ENGINEERS & PLANNERS

COMMONWEALTH OF MASSACHUSETTS — CONOR MURPHY — CIVIL — No. 54506 — REGISTERED PROFESSIONAL ENGINEER
8/5/2022

Scale	AS NOTED				
Date	MAY 2022				
Job No.	----				
Designed by	CPM				
Drawn by	CPM	0	CONFORMED SET	8/5/2022	
Checked by	CPM	No.	Description	Date	
Approved by	PV	REVISIONS			

THE WORKS — CAMBRIDGE DEPARTMENT OF PUBLIC WORKS

Client	CITY OF CAMBRIDGE, MA	Sheet	TR-2.05
Project	RIVER STREET INFRASTRUCTURE AND STREETSCAPE PROJECT	Total Sheets	381
Drawing	**TRAFFIC SIGNAL LAYOUT PLAN 4 RIVER STREET AT GREEN STREET AND WESTERN AVENUE**	File No.	

Plotted: 8/12/2022 3:53:43 PM
File: I:\ENGIY16043.45 RIVER STREET\HD\DWG\PLOT\7113XXX_TR(PLOT - SIGNAL - GREEN).DWG

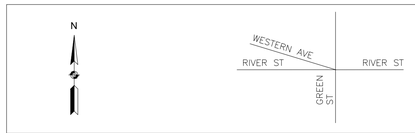

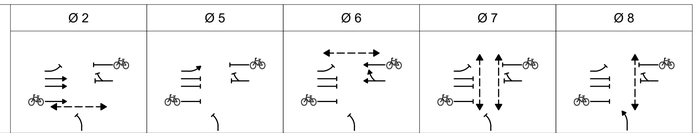

SEQUENCE AND TIMING FOR ACTUATED-COORDINATED CONTROL

STREET	DIRECTION	HOUSINGS	1	2	3	4	5	6	7	8	9	10	11	12	13	14	15	16	17	18	19	20	FLASH OP
RIVER STREET	EB	1A, 1B, 1C	R	G	Y	R	R	R	R	R	R	R	R	R	R	R	R	R	R	R	R	R	FY
RIVER STREET	EBL	4A, 6A	~~R~~	~~R~~	~~R~~	~~R~~	~~R~~	~~G~~	~~Y~~	~~R~~	~~R~~	~~R~~	~~R~~	~~R~~	~~R~~	~~R~~	~~R~~	~~R~~	~~R~~	~~R~~	~~R~~	~~R~~	~~FY~~
WESTERN AVENUE	WB	2A, 2B, 4B	R	R	R	R	R	R	R	R	R	G	Y	R	R	R	R	R	R	R	R	R	FY
GREEN STREET	NB	1D, 1G	❙	❙	❙	❙	❙	❙	❙	❙	❙	❙	❙	❙	❙	❙	❙	❙	❙	▲	▬	▬	▬
RIVER STREET BIKE SIGNAL	EB	1H, 8A	G	G	Y	R	R	R	R	R	R	R	R	R	R	R	R	R	R	R	R	R	FR
WESTERN AVENUE BIKE SIGNAL	WB	5A, 7A	R	R	R	R	R	R	R	R	G	G	Y	R	R	R	R	R	R	R	R	R	FR
PEDESTRIAN	EB-WB	5F-6E	DW	DW	DW	DW	DW	DW	DW	DW	W	W	FDW	DW	DW	DW	DW	DW	DW	DW	DW	DW	OUT
PEDESTRIAN	EB-WB	9E-10E	W	W	FDW	DW	DW	DW	DW	DW	DW	DW	DW	DW	DW	DW	DW	DW	DW	DW	DW	DW	OUT
PEDESTRIAN	NB-SB	3E-5E	DW	DW	DW	DW	DW	DW	DW	DW	DW	DW	DW	DW	W	W	FDW	DW	DW	DW	DW	DW	OUT
PEDESTRIAN	NB-SB	7E-8E	DW	DW	DW	DW	DW	DW	DW	DW	DW	DW	DW	DW	W	W	FDW	DW	DW	W	W	W	OUT
TIMING IN SECONDS																							
MINIMUM GREEN (INITIAL)				15				5				15								2			
LEADING BIKE INTERVAL																							
PASSAGE TIME (VEHICLE)				3				3				3								2			
MAXIMUM 1 (ALL OTHER TIMES)				26				5			3	13								2			
MAXIMUM 2 (DIAL 1/DIAL 2/DIAL 3 OPERATION)				41				12			3	8								2			
YELLOW CLEARANCE					3.5				3.0				3.5								3.0		
RED CLEARANCE						1.0				1.5				1.0								4.5	
WALK (W)				*7							3	*7				7				*10			
PEDESTRIAN CLEARANCE					11	3							8	3			24	3					
RECALL				MAX				MAX				MAX				PED				NONE			
MEMORY				NON-LOCK				NON-LOCK				NON-LOCK				NON-LOCK				NON-LOCK			

TIME OF DAY PLAN

PROGRAM	DAY	TIME	OFFSET	CYCLE LENGTH	Ø 2	Ø 5	Ø 6	Ø 7	Ø 8
DIAL 1	MON-FRI	1000-1500, 2000-0600	35	75	31	10	21	34	10
DIAL 2	MON-FRI	0600-1000	39	90	46	13	33	34	10
DIAL 3	MON-FRI	1500-2000	32	90	46	17	29	34	10

TECHNICAL NOTES	
1.	*PED SHALL REST IN WALK.
2.	RUN ALL FDW(S) THROUGH YELLOW INTERVALS.
3.	VIDEO DETECTION FOR PHASE 8 SHALL BE PROGRAMMED TO ONLY ACTIVATE FOR BUSES AND BIKES.

MAJOR ITEMS REQUIRED

PAY ITEM	QUANTITY	ITEM
2890.4	1	15' MAST ARM ASSEMBLY, BASE, & FOUNDATION (STEEL) WITH BLACK POWDER COAT
	1	40' MAST ARM ASSEMBLY, BASE, & FOUNDATION (STEEL) WITH BLACK POWDER COAT
	4	8' TRAFFIC SIGNAL POST, BASE, & FOUNDATION (STEEL) WITH BLACK POWDER COAT
	4	10' TRAFFIC SIGNAL POST, BASE, & FOUNDATION (STEEL) WITH BLACK POWDER COAT
	2	3 SECTION - 4" LENS SIGNAL HEAD
	12	3 SECTION - 12" LENS SIGNAL HEAD
	6	5" NON-LOUVERED BACKPLATE
	8	PEDESTRIAN HOUSING (16" LED) COUNTDOWN - SINGLE SECTION
	8	AUDIBLE PEDESTRIAN SIGNAL PUSHBUTTON ASSEMBLY (COWBELL TONE)
	1	TS2 TYPE 1 SIGNAL CONTROLLER (EAGLE SIEMENS M60), CABINET (TYPE M), AND FOUNDATION
	1	MICROWAVE WIRELESS INTERCONNECT
	1	ETHERNET SWITCH
	1	24 POSITION FIBER PATCH PANEL
	1	SERVICE CONNECTION (UNDERGROUND)
	1	VIDEO CAMERA FOR VIDEO DETECTION
	1	VIDEO DETECTION PROCESSOR UNIT
	1	LED VIDEO MONITOR DISPLAY FOR VIDEO DETECTION
	1	GPS TIME CLOCK
	1	R&S SELECTED SIGNAL EQUIPMENT
2890.6	380 LF	3 INCH ELECTRICAL CONDUIT TYPE NM - PLASTIC (UL)
2890.7	8	PULL BOX 12"X12"
2890.9	1	SERVICE CONNECTION EVERSOURCE APPROVED HANDHOLE
PLUS ALL NECESSARY DUCT, CABLE, LABOR, MISCELLANEOUS MATERIAL AND EQUIPMENT TO COMPLETE THE INSTALLATION.		

SIGNAL IDENTIFICATION

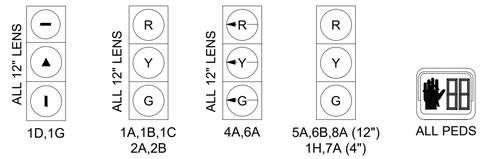

NOTES:
1. ALL SIGNAL HOUSINGS SHALL BE EQUIPPED WITH TUNNEL VISORS.
2. ALL SIGNAL HEADS MOUNTED OVERHEAD SHALL BE EQUIPPED WITH 5" BACKPLATES (NON-LOUVERED). BACKPLATES SHALL NOT HAVE RETROREFLECTIVE BORDERS.
3. PEDESTRIAN SIGNALS SHALL BE ONE SECTION, DUAL DISPLAY, 16" LED.
4. ALL 4" BICYCLE SIGNAL HEADS SHALL BE MOUNTED AT A HEIGHT OF 4.5' FROM BOTTOM OF SIGNAL HEAD TO TOP OF SIDEWALK.

VIDEO DETECTOR DATA

DELAY TIME EFFECTIVE ONLY DURING CALLED Ø RED. TIME IN SEC.

DETECTOR NUMBER	VIDEO ZONE SIZE	Ø CALLED	Ø EXT	MODE A=PULSE B=PRES	DELAY TIME	EXT TIME
V1	6'X30'	8	8	B	0	0

NEMA DUAL RING PHASING NOTES

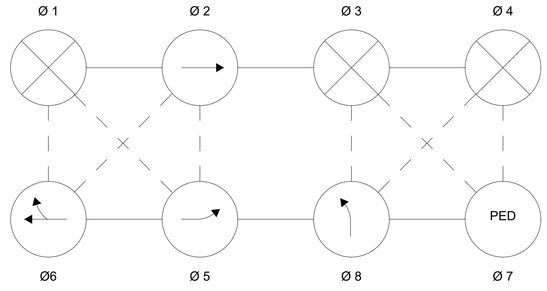

1. PHASES ASSOCIATED BY A SOLID LINE SHALL NOT OPERATE CONCURRENTLY.
2. PHASES ASSOCIATED BY A DASHED LINE MAY OPERATE CONCURRENTLY.
3. THROUGH MOVEMENTS MAY INCLUDE RIGHT TURNS.
4. IF THE ASSIGNED RIGHT OF WAY FOR ANY TRAFFIC MOVEMENT IS TO REMAIN IN EFFECT DURING THE NEXT CALLED PHASE, THE SIGNAL INDICATIONS FOR THAT TRAFFIC MOVEMENT SHALL NOT CHANGE DURING THE CHANGE INTERVAL(S) UNLESS OTHERWISE NOTED.

PREFERENTIAL PHASING SEQUENCE

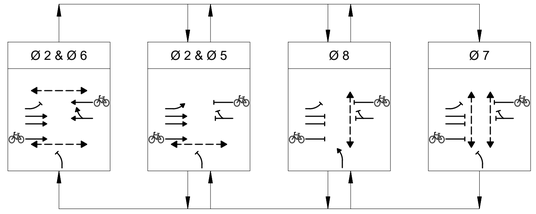

CONFORMED SET

HDR ENGINEERING, INC.
99 HIGH STREET, SUITE 2300
BOSTON, MASSACHUSETTS 02110-2378
(617) 357-7700

McMAHON TRANSPORTATION ENGINEERS & PLANNERS

COMMONWEALTH OF MASSACHUSETTS
CONOR MURPHY
CIVIL
No. 54506
REGISTERED PROFESSIONAL ENGINEER
8/5/2022

Scale	AS NOTED			
Date	MAY 2022			
Job No.	----			
Designed by	CPM			
Drawn by	CPM	0	CONFORMED SET	8/5/2022
Checked by	CPM	No.	Description	Date
Approved by	PV	REVISIONS		

THE WORKS — CAMBRIDGE DEPARTMENT OF PUBLIC WORKS

Client	CITY OF CAMBRIDGE, MA
Project	RIVER STREET INFRASTRUCTURE AND STREETSCAPE PROJECT
Drawing	**TRAFFIC SIGNAL DATA PLAN 4** **RIVER STREET AT GREEN STREET AND WESTERN AVENUE**
Sheet	TR-2.06
Total Sheets	381
File No.	

Plotted: 8/12/2022 3:53:50 PM
File: I:\ENG\Y16\043.45 RIVER STREET\HD\DWG\PLOT\7113XXX_TR(PLOT - SIGNAL - GREEN).DWG

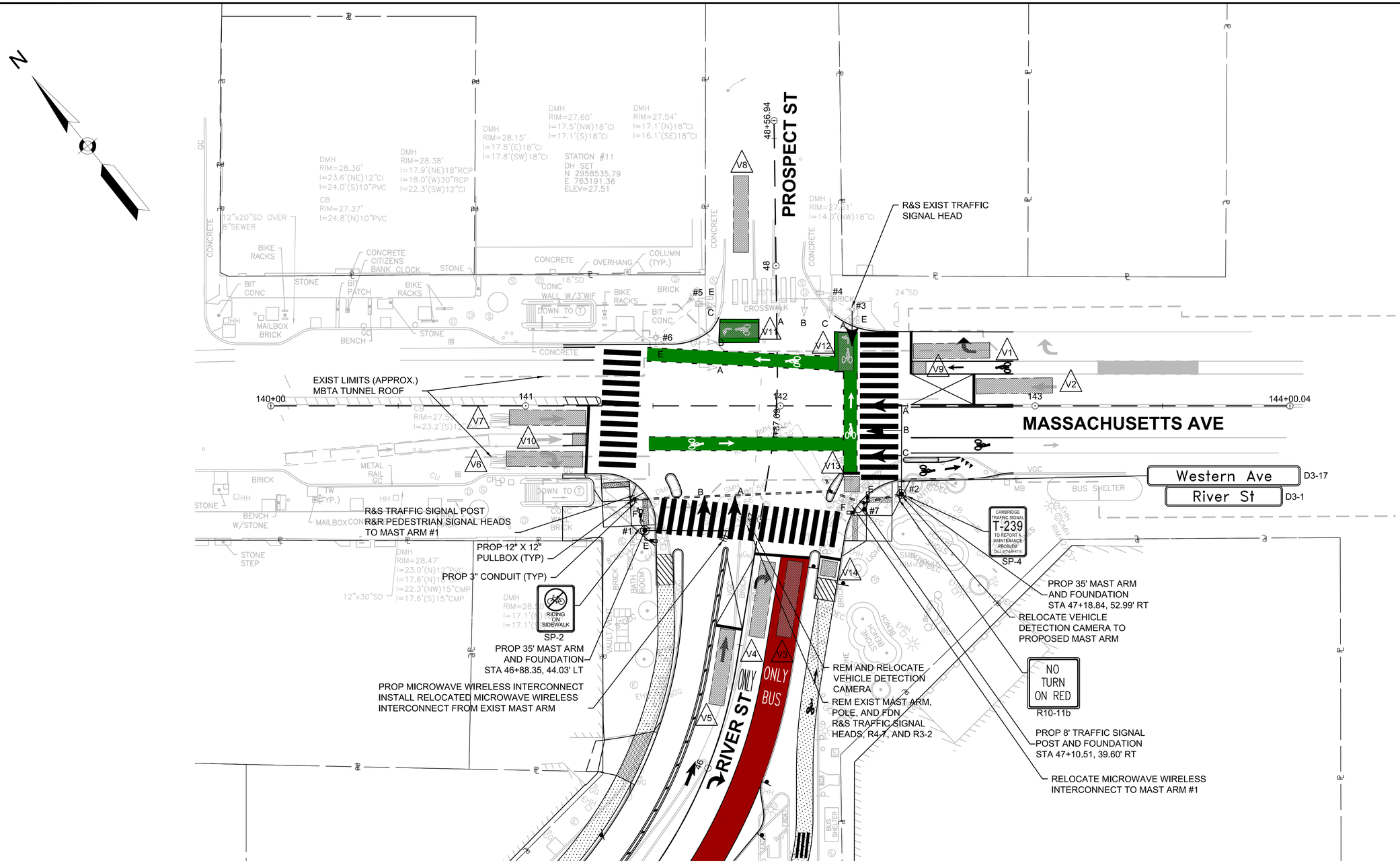

PLAN

0 20 50 100

SCALE: 1" = 20'

CONFORMED SET

HDR ENGINEERING, INC.
99 HIGH STREET, SUITE 2300
BOSTON, MASSACHUSETTS 02110-2378
(617) 357-7700

McMAHON TRANSPORTATION ENGINEERS & PLANNERS

COMMONWEALTH OF MASSACHUSETTS
CONOR MURPHY
CIVIL
No. 54506
REGISTERED PROFESSIONAL ENGINEER
8/5/2022

Scale	AS NOTED			
Date	MAY 2022			
Job No.	----			
Designed by	CPM			
Drawn by	CPM	0	CONFORMED SET	8/5/2022
Checked by	PV	No.	Description	Date
Approved by	PV	REVISIONS		

THE WORKS — CAMBRIDGE DEPARTMENT OF PUBLIC WORKS

Client: CITY OF CAMBRIDGE, MA

Project: RIVER STREET
INFRASTRUCTURE AND STREETSCAPE PROJECT

Drawing: **TRAFFIC SIGNAL LAYOUT PLAN 5**
RIVER STREET AT MASSACHUSETTS AVENUE

Sheet: TR-2.07

Total Sheets: 381

File No.:

File: I:\ENGIY16043.45 RIVER STREET\HD\DWG\PLOT\7113XXX_TR(PLOT - SIGNAL - MASS AVE).DWG
Plotted: 8/12/2022 3:56:17 PM

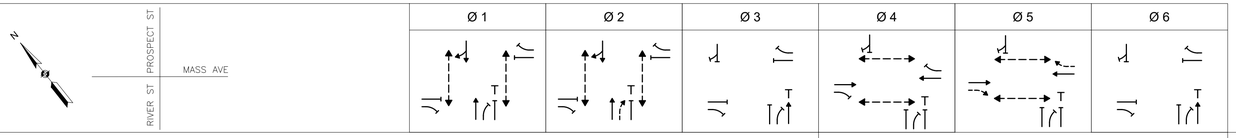

SEQUENCE AND TIMING FOR ACTUATED-COORDINATED CONTROL

STREET	DIRECTION	HOUSINGS	1	2	3	4	5	6	7	8	9	10	11	12	13	14	15	16	17	18	19	20	21	22	23	24	FLASH OP
PROSPECT STREET	SB	1A, 1B	R	G	G	G		G	Y	R		R	R	R		R	R	R		R	R	R		R	R	R	FR
RIVER STREET	NB	4A, 4B	GVA	GVA	GVA	GVA		GVA	Y	R		R	R	R		R	R	R		R	R	R		R	R	R	FR
RIVER STREET	NBR	4C	R►	R►	R►	R►		FY►	Y►	R►		R►	R►	R►		R►	R►	R►		R►	R►	R►		R►	R►	R►	FR
MASS AVE	EB	2A, 2B	R	R	R	R		R	R	R		R	R	R		GVA	GVA	GVA		GVA	Y	R		R	R	R	FY
MASS AVE	EBR	2C	R►	R►	R►	R►		R►	R►	R►		R►	R►	R►		R►	R►	R►		FY►	Y►	R►		R►	R►	R►	FY
MASS AVE	WB	5A, 5B	R	R	R	R		R	R	R		R	R	R		GVA	GVA	GVA		GVA	Y	R		R	R	R	FY
MASS AVE	WBR	5C	R►	R►	R►	R►		R►	R►	R►		R►	R►	R►		R►	R►	R►		FY►	Y►	R►		R►	R►	R►	FY
PROSPECT STREET - TRANSIT	NB	3A	▬	▬	▬	▬		▬	▬	▬		▌	▲	▬		▬	▬	▬		▬	▬	▬		▌	▲	▬	▬
PEDESTRIAN - MASS AVE	NB-SB	1A-3E,4B-7A	W	W	W	W		W/FDW	FDW	DW		DW	DW	DW		DW	DW	DW		DW	DW	DW		DW	DW	DW	OUT
PEDESTRIAN - PROSPECT ST	EB-WB	1B-3D,5D-6D	DW	DW	DW	DW		DW	DW	DW		DW	DW	DW		W	W	W		W/FDW	FDW	DW		DW	DW	DW	OUT
TIMING IN SECONDS																											
MINIMUM GREEN (INITIAL)				5				5				3				5				5				3			
PASSAGE TIME (VEHICLE)				2				2				3				2				2				3			
MAXIMUM 1 (ALL OTHER TIMES)				7				13				3				7				16				3			
MAXIMUM 2 (DIAL 1/DIAL 2/DIAL 3 OPERATION)				10				22				3				10				17				3			
YELLOW CLEARANCE					-				3.0				3.0				-				3.0				3.0		
RED CLEARANCE						-				2.5				4.0				-				2.5					4.0
WALK (W)			5	*				*								*				*							
PEDESTRIAN CLEARANCE					-	-		13	3	3.0							-	-		16	3	3.0					
RECALL				PED				MAX				NONE				PED				MAX				NONE			
MEMORY				NON-LOCK				NON-LOCK				NON-LOCK				NON-LOCK				NON-LOCK				NON-LOCK			

TIME OF DAY PLAN										
PROGRAM	DAY	TIME	OFFSET	CYCLE LENGTH	Ø 1	Ø 2	Ø 3	Ø 4	Ø 5	Ø 6
DIAL 1	MON-FRI	1000-1500 2000-0600	35	75	7	19	10	7	22	10
DIAL 2	MON-FRI	0600-1000	41	90	10	27	10	10	23	10
DIAL 3	MON-FRI	1500-2000	35	90	10	28	10	10	22	10

TECHNICAL NOTES	
1.	PEDESTRIAN PHASES REST IN WALK.
2.	RUN ALL FDW(S) THROUGH YELLOW INTERVALS.
3.	* WALK TIME VARIABLE W/ COORDINATED PHASE

PREFERENTIAL PHASING SEQUENCE

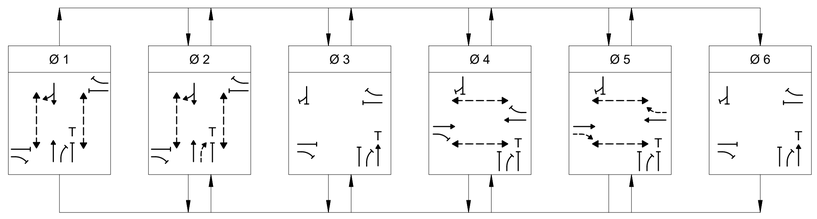

MAJOR ITEMS REQUIRED

PAY ITEM	QUANTITY	ITEM
2890.5	2	35' MAST ARM ASSEMBLY, BASE, & FOUNDATION (STEEL) WITH BLACK POWDER COAT
	1	8' TRAFFIC SIGNAL POST, BASE, & FOUNDATION (STEEL) WITH BLACK POWDER COAT
	6	3 SECTION - 12" LENS SIGNAL HEAD
	5	5" NON-LOUVERED BACKPLATE
	4	PEDESTRIAN HOUSING (16" LED) COUNTDOWN - SINGLE SECTION
	1	MICROWAVE WIRELESS INTERCONNECT
	1	GPS TIME CLOCK
	1	TRAFFIC SIGNAL CONTROLLER ADJUSTMENTS
	1	R&R SELECTED SIGNAL EQUIPMENT
	1	R&S SELECTED SIGNAL EQUIPMENT
2890.6	140 LF	3 INCH ELECTRICAL CONDUIT TYPE NM - PLASTIC (UL)
2890.7	3	PULL BOX 12"X12"
PLUS ALL NECESSARY DUCT, CABLE, LABOR, MISCELLANEOUS MATERIAL AND EQUIPMENT TO COMPLETE THE INSTALLATION.		

SIGNAL IDENTIFICATION

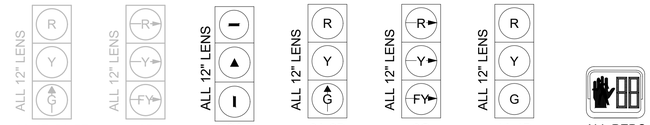

NOTES:
1. ALL SIGNAL HOUSINGS SHALL BE EQUIPPED WITH TUNNEL VISORS.
2. ALL SIGNAL HEADS MOUNTED OVERHEAD SHALL BE EQUIPPED WITH 5" BACKPLATES (NON-LOUVERED). BACKPLATES SHALL NOT HAVE RETROREFLECTIVE BORDERS.
3. PEDESTRIAN SIGNALS SHALL BE ONE SECTION, DUAL DISPLAY, 16" LED.

VIDEO DETECTOR DATA

DELAY TIME EFFECTIVE ONLY DURING CALLED Ø RED. TIME IN SEC.

DETECTOR NUMBER	VIDEO ZONE SIZE	Ø CALLED	Ø EXT	MODE A=PULSE B=PRES	DELAY TIME	EXT TIME
V1	6'X30'	5	5	B	0	0
V2	6'X30'	4	4	B	0	0
V3	6'X30'	3/6	3/6	B	0	0
V4	6'X30'	2	2	B	0	0
V5	6'X30'	1	1	B	0	0
V6	6'X30'	5	5	B	0	0
V7	6'X30'	4	4	B	0	0
V8	6'X30'	1	1	B	0	0
V9	5'X5'	4	4	B	0	0
V10	5'X5'	4	4	B	0	0
V11	6'X15'	1	1	B	0	0
V12	6'X15'	4	4	B	0	0
V13	6'X6'	1	1	B	0	0
V14	6'X6'	1	1	B	0	0

CONFORMED SET

HDR ENGINEERING, INC.
99 HIGH STREET, SUITE 2300
BOSTON, MASSACHUSETTS 02110-2378
(617) 357-7700

McMAHON TRANSPORTATION ENGINEERS & PLANNERS

COMMONWEALTH OF MASSACHUSETTS
CONOR MURPHY
CIVIL
No. 54506
REGISTERED PROFESSIONAL ENGINEER
8/5/2022

Scale	AS NOTED			
Date	MAY 2022			
Job No.	----			
Designed by	CPM			
Drawn by	CPM	0	CONFORMED SET	8/5/2022
Checked by	PV	No.	Description	Date
Approved by	PV	REVISIONS		

THE WORKS — CAMBRIDGE DEPARTMENT OF PUBLIC WORKS

Client	CITY OF CAMBRIDGE, MA	Sheet	TR-2.08
Project	RIVER STREET INFRASTRUCTURE AND STREETSCAPE PROJECT	Total Sheets	381
Drawing	**TRAFFIC SIGNAL DATA PLAN 5** **RIVER STREET AT MASSACHUSETTS AVENUE**	File No.	

File: I:\ENGIY16043.45 RIVER STREET\HD\DWG\PLOT\7113XXX_TR(PLOT - SIGNAL - MASS AVE).DWG
Plotted: 8/12/2022 3:56:21 PM

DIAL 1 WEEKDAY MIDDAY AND OVERNIGHT HOURS

RIVER STREET

75 SECOND CYCLE

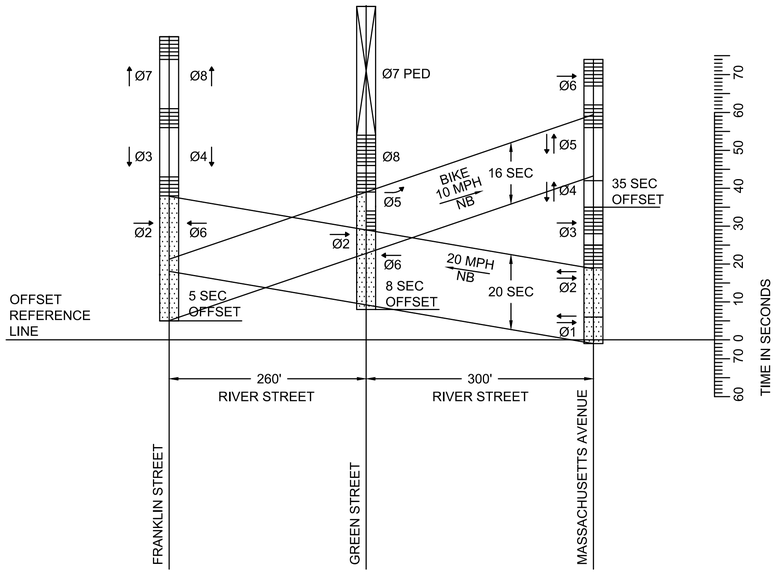

RIVER STREET / WESTERN AVENUE

FRANKLIN STREET

COORDINATION DATA

(ALL ENTRIES IN SECONDS)

	DIAL 3
CYCLE LENGTH	75 SEC
OFFSET	5
SPLIT Ø2 / Ø6	38
SPLIT Ø3 / Ø4	18
SPLIT Ø7 / Ø8	19
COORDINATED PHASE	Ø2 & Ø6

RIVER STREET / WESTERN AVENEUE

GREEN STREET

COORDINATION DATA

(ALL ENTRIES IN SECONDS)

	DIAL 3
CYCLE LENGTH	90 SEC
OFFSET	8
SPLIT Ø2 / Ø6	21
SPLIT Ø2 / Ø5	10
SPLIT Ø8	10
SPLIT Ø7 (PED)	34
COORDINATED PHASE	Ø2 & Ø6

RIVER STREET / PROSPECT STREET

MASSACHUSETTS AVENUE

COORDINATION DATA

(ALL ENTRIES IN SECONDS)

	DIAL 3
CYCLE LENGTH	90 SEC
OFFSET	35
SPLIT Ø1	7
SPLIT Ø2	19
SPLIT Ø3	10
SPLIT Ø4	7
SPLIT Ø5	22
SPLIT Ø6	10
COORDINATED PHASE	Ø4

LEGEND

- COORDINATED PHASE(S) GREEN TIME
- NON-COORDINATED PHASES(S) GREEN TIME
- CLEARANCE TIME (YELLOW + RED)
- PHASE MOVEMENT
- INTERSECTION-INTERSECTION COORDINATION BAND

COORDINATION NOTES:

1. OFFSET TO BEGINNING OF Ø2 AND Ø6 YELLOW.
2. ALL COORDINATION SPLIT TIMES INCLUDE YELLOW AND RED CLEARANCE TIME.
3. COORDINATION MODE SHALL BE SINGLE YIELD POINT AND FIXED FORCE OFFS SHALL NOT BE IN EFFECT DURING COORDINATION AT GREEN STREET.
4. COORDINATION MODE SHALL BE SINGLE YIELD POINT AND FIXED FORCE OFFS SHALL BE IN EFFECT DURING COORDINATION AT FRANKLIN STREET AND MASSACHUSETTS AVENUE.
5. INHIBIT MAX TERMINATION SHALL BE IN EFFECT DURING COORDINATION.
6. OFFSET SEEKING SHALL BE THE SHORTWAY METHOD.

DAILY & WEEKLY COORDINATION PROGRAM

	MONDAY THRU FRIDAY	SATURDAY	SUNDAY
DIAL 2 90" CYCLE	6:00AM -10:00AM	-	-
DIAL 3 90" CYCLE	3:00PM -8:00PM	-	-
DIAL 1 75" CYCLE	10:00AM -3:00PM 8:00PM -6:00AM	-	-
MAX 1	ALL OTHER TIMES	ALL OTHER TIMES	ALL OTHER TIMES

File: I:\ENG\Y16043.45 RIVER STREET\HD\DWG\PLOT\7113XXX_TR(PLOT - TSD).DWG Plotted: 8/12/2022 3:56:46 PM

CONFORMED SET

HDR ENGINEERING, INC.
99 HIGH STREET, SUITE 2300
BOSTON, MASSACHUSETTS 02110-2378
(617) 357-7700

McMAHON TRANSPORTATION ENGINEERS & PLANNERS

COMMONWEALTH OF MASSACHUSETTS
CONOR MURPHY
CIVIL
No. 54506
REGISTERED PROFESSIONAL ENGINEER
8/5/2022

Scale	AS NOTED			
Date	MAY 2022			
Job No.	----			
Designed by	CPM			
Drawn by	CPM	0	CONFORMED SET	8/5/2022
Checked by	PV	No.	Description	Date
Approved by	PV	REVISIONS		

THE WORKS — CAMBRIDGE DEPARTMENT OF PUBLIC WORKS

Client: CITY OF CAMBRIDGE, MA

Project: RIVER STREET
INFRASTRUCTURE AND STREETSCAPE PROJECT

Drawing: **TIME SPACE DIAGRAM**
DIAL 1 - WEEKDAY OFF-PEAK AND OVERNIGHT HOURS

Sheet: TR-2.09

Total Sheets: 381

File No.

DIAL 2 WEEKDAY MORNING PEAK HOURS

RIVER STREET

90 SECOND CYCLE

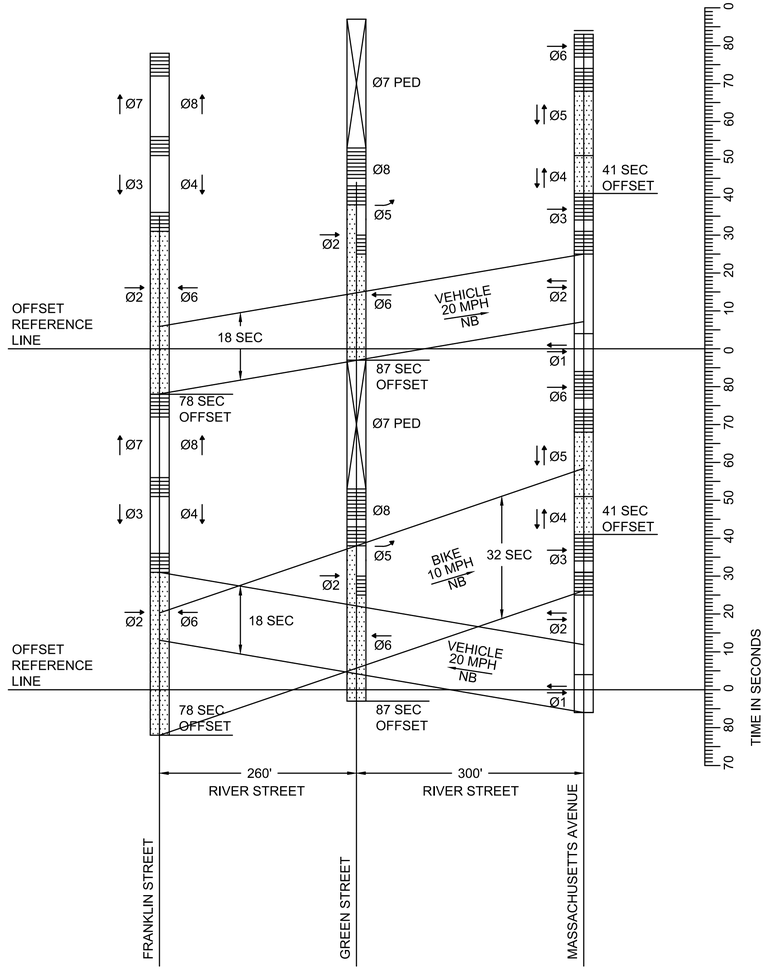

RIVER STREET / WESTERN AVENUE

FRANKLIN STREET

COORDINATION DATA

(ALL ENTRIES IN SECONDS)

	DIAL 2
CYCLE LENGTH	90 SEC
OFFSET	78
SPLIT Ø2 / Ø6	48
SPLIT Ø3 / Ø4	20
SPLIT Ø7 / Ø8	22
COORDINATED PHASE	Ø2 & Ø6

RIVER STREET / WESTERN AVENEUE

GREEN STREET

COORDINATION DATA

(ALL ENTRIES IN SECONDS)

	DIAL 2
CYCLE LENGTH	90 SEC
OFFSET	87
SPLIT Ø2 / Ø6	33
SPLIT Ø2 / Ø5	13
SPLIT Ø8	10
SPLIT Ø7 (PED)	34
COORDINATED PHASE	Ø2 & Ø6

RIVER STREET / PROSPECT STREET

MASSACHUSETTS AVENUE

COORDINATION DATA

(ALL ENTRIES IN SECONDS)

	DIAL 2
CYCLE LENGTH	90 SEC
OFFSET	41
SPLIT Ø1	10
SPLIT Ø2	27
SPLIT Ø3	10
SPLIT Ø4	10
SPLIT Ø5	23
SPLIT Ø6	10
COORDINATED PHASE	Ø4

LEGEND

- COORDINATED PHASE(S) GREEN TIME
- NON-COORDINATED PHASES(S) GREEN TIME
- CLEARANCE TIME (YELLOW + RED)
- PHASE MOVEMENT
- INTERSECTION-INTERSECTION COORDINATION BAND

COORDINATION NOTES:

1. OFFSET TO BEGINNING OF Ø2 AND Ø6 YELLOW.
2. ALL COORDINATION SPLIT TIMES INCLUDE YELLOW AND RED CLEARANCE TIME.
3. COORDINATION MODE SHALL BE SINGLE YIELD POINT AND FIXED FORCE OFFS SHALL NOT BE IN EFFECT DURING COORDINATION AT GREEN STREET.
4. COORDINATION MODE SHALL BE SINGLE YIELD POINT AND FIXED FORCE OFFS SHALL BE IN EFFECT DURING COORDINATION AT FRANKLIN STREET AND MASSACHUSETTS AVENUE.
5. INHIBIT MAX TERMINATION SHALL BE IN EFFECT DURING COORDINATION.
6. OFFSET SEEKING SHALL BE THE SHORTWAY METHOD.

DAILY & WEEKLY COORDINATION PROGRAM

	MONDAY THRU FRIDAY	SATURDAY	SUNDAY
DIAL 2 90" CYCLE	6:00AM -10:00AM	-	-
DIAL 3 90" CYCLE	3:00PM -8:00PM	-	-
DIAL 1 75" CYCLE	10:00AM -3:00PM 8:00PM -6:00AM	-	-
MAX 1	ALL OTHER TIMES	ALL OTHER TIMES	ALL OTHER TIMES

File: I:\ENG\Y16043.45 RIVER STREET\HD\DWG\PLOT\7113XXX_TR(PLOT - TSD).DWG Plotted: 8/12/2022 3:56:50 PM

CONFORMED SET

HDR ENGINEERING, INC.
99 HIGH STREET, SUITE 2300
BOSTON, MASSACHUSETTS 02110–2378
(617) 357–7700

McMAHON TRANSPORTATION ENGINEERS & PLANNERS

CONOR MURPHY CIVIL No. 54506 REGISTERED PROFESSIONAL ENGINEER COMMONWEALTH OF MASSACHUSETTS
8/5/2022

Scale	AS NOTED			
Date	MAY 2022			
Job No.	----			
Designed by	CPM			
Drawn by	CPM	0	CONFORMED SET	8/5/2022
Checked by	PV	No.	Description	Date
Approved by	PV	REVISIONS		

THE WORKS — CAMBRIDGE DEPARTMENT OF PUBLIC WORKS

Client	CITY OF CAMBRIDGE, MA
Project	RIVER STREET INFRASTRUCTURE AND STREETSCAPE PROJECT
Drawing	**TIME SPACE DIAGRAM DIAL 2 - WEEKDAY MORNING PEAK HOURS**
Sheet	TR-2.10
Total Sheets	381
File No.	

DIAL 3 WEEKDAY EVENING PEAK HOURS

RIVER STREET

90 SECOND CYCLE

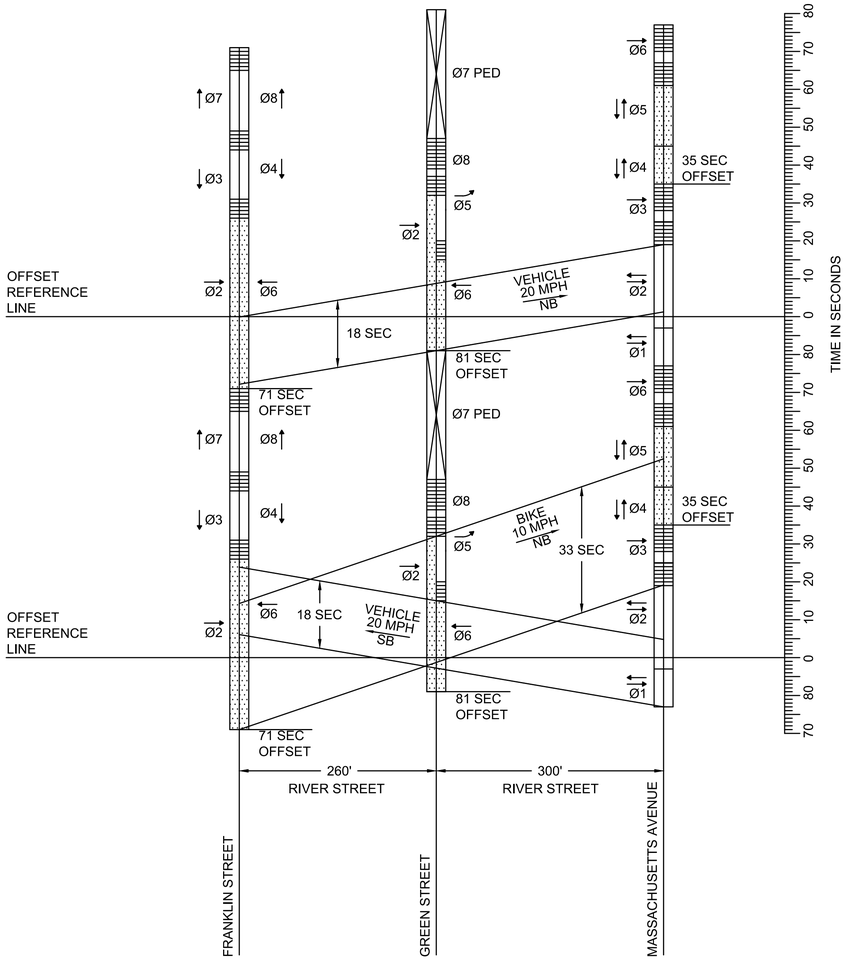

RIVER STREET / WESTERN AVENUE

FRANKLIN STREET

COORDINATION DATA

(ALL ENTRIES IN SECONDS)

	DIAL 3
CYCLE LENGTH	90 SEC
OFFSET	71
SPLIT Ø2 / Ø6	50
SPLIT Ø3 / Ø4	18
SPLIT Ø7 / Ø8	22
COORDINATED PHASE	Ø2 & Ø6

RIVER STREET / WESTERN AVENEUE

GREEN STREET

COORDINATION DATA

(ALL ENTRIES IN SECONDS)

	DIAL 3
CYCLE LENGTH	90 SEC
OFFSET	81
SPLIT Ø2 / Ø6	29
SPLIT Ø2 / Ø5	17
SPLIT Ø8	10
SPLIT Ø7 (PED)	34
COORDINATED PHASE	Ø2 & Ø6

RIVER STREET / PROSPECT STREET

MASSACHUSETTS AVENUE

COORDINATION DATA

(ALL ENTRIES IN SECONDS)

	DIAL 3
CYCLE LENGTH	90 SEC
OFFSET	35
SPLIT Ø1	10
SPLIT Ø2	28
SPLIT Ø3	10
SPLIT Ø4	10
SPLIT Ø5	22
SPLIT Ø6	10
COORDINATED PHASE	Ø4

LEGEND

- COORDINATED PHASE(S) GREEN TIME
- NON-COORDINATED PHASES(S) GREEN TIME
- CLEARANCE TIME (YELLOW + RED)
- PHASE MOVEMENT
- INTERSECTION-INTERSECTION COORDINATION BAND

COORDINATION NOTES:

1. OFFSET TO BEGINNING OF Ø2 AND Ø6 YELLOW.
2. ALL COORDINATION SPLIT TIMES INCLUDE YELLOW AND RED CLEARANCE TIME.
3. COORDINATION MODE SHALL BE SINGLE YIELD POINT AND FIXED FORCE OFFS SHALL NOT BE IN EFFECT DURING COORDINATION AT GREEN STREET.
4. COORDINATION MODE SHALL BE SINGLE YIELD POINT AND FIXED FORCE OFFS SHALL BE IN EFFECT DURING COORDINATION AT FRANKLIN STREET AND MASSACHUSETTS AVENUE.
5. INHIBIT MAX TERMINATION SHALL BE IN EFFECT DURING COORDINATION.
6. OFFSET SEEKING SHALL BE THE SHORTWAY METHOD.

DAILY & WEEKLY COORDINATION PROGRAM

	MONDAY THRU FRIDAY	SATURDAY	SUNDAY
DIAL 2 90" CYCLE	6:00AM -10:00AM	-	-
DIAL 3 90" CYCLE	3:00PM -8:00PM	-	-
DIAL 1 75" CYCLE	10:00AM -3:00PM 8:00PM -6:00AM	-	-
MAX 1	ALL OTHER TIMES	ALL OTHER TIMES	ALL OTHER TIMES

File: I:\ENG\Y16043.45 RIVER STREET\HD\DWG\PLOT\7113XXX_TR(PLOT - TSD).DWG Plotted: 8/12/2022 3:56:55 PM

CONFORMED SET

HDR ENGINEERING, INC.
99 HIGH STREET, SUITE 2300
BOSTON, MASSACHUSETTS 02110–2378
(617) 357–7700

McMAHON TRANSPORTATION ENGINEERS & PLANNERS

COMMONWEALTH OF MASSACHUSETTS
CONOR MURPHY
CIVIL
No. 54506
REGISTERED PROFESSIONAL ENGINEER
8/5/2022

Scale	AS NOTED			
Date	MAY 2022			
Job No.	----			
Designed by	CPM			
Drawn by	CPM	0	CONFORMED SET	8/5/2022
Checked by	PV	No.	Description	Date
Approved by	PV	REVISIONS		

THE WORKS — CAMBRIDGE DEPARTMENT OF PUBLIC

Client	CITY OF CAMBRIDGE, MA	Sheet	TR-2.11
Project	RIVER STREET INFRASTRUCTURE AND STREETSCAPE PROJECT	Total Sheets	381
Drawing	**TIME SPACE DIAGRAM DIAL 3 - WEEKDAY EVENING PEAK HOURS**	File No.	

ID #	SIZE OF SIGN (IN)		SIGN	TEXT DIMENSIONS			NUMBERS OF SIGNS REQUIRED	COLOR			POST SIZE	UNIT AREA (SF)	TOTAL AREA (SF)
	WIDTH	HEIGHT		LETTER HEIGHT	VERTICAL SPACING	ARROW RTE MKR		BACK-GROUND	LEGEND	BORDER			
D3-1	30	9	River Street	SEE 2009 MUTCD			12	SEE 2009 MUTCD			P5-1 (6) MNT ON MA POLE (3) MNT R6-1 (2) MNT ON LP (1)	1.88	22.50
D3-2	30	9	Blackstone Street				1				MNT W/ D3-1	1.88	1.88
D3-3	30	9	Putnam Ave				1				MNT W/ D3-1	1.88	1.88
D3-4	30	9	Fairmont Street				1				MNT W/ D3-1	1.88	1.88
D3-5	30	9	Rockwell Street				1				MNT W/ R6-1	1.88	1.88
D3-6	30	9	Laurel Street				1				MNT ON LP	1.88	1.88
D3-7	30	9	Wildred Hamilton Pl				2				MNT ON LP	1.88	3.75
D3-8	30	9	Kelly Road				1				MNT W/ D3-1	1.88	1.88
D3-9	30	9	Howard Street				1				MNT ON MA	1.88	1.88
D3-10	30	9	Jay Street				1				MNT ON LP	1.88	1.88
D3-11	30	9	Kinnaird Street				1				MNT W/ D3-1	1.88	1.88
D3-12	30	9	Cottage Street				1				MNT W/ R6-1	1.88	1.88
D3-13	30	9	Pleasant Street				1				MNT W/ R6-1	1.88	1.88
D3-14	30	9	William Street				1				P5-1 (1)	1.88	1.88
D3-15	30	9	Auburn Street				2				MNT W/ R6-1	1.88	3.75
D3-16	30	9	Franklin Street				1				MNT W/ R6-1	1.88	1.88
D3-17	30	9	Western Ave				2				P5-1 (1) MNT ON MA (1)	1.88	3.75
D3-18	30	9	Magazine Street	↓	↓	↓	1	↓	↓	↓	MNT W/ R5-1 (1)	1.88	1.88
												SUBTOTAL	60.00

ID #	SIZE OF SIGN (IN)		SIGN	TEXT DIMENSIONS			NUMBERS OF SIGNS REQUIRED	COLOR			POST SIZE	UNIT AREA (SF)	TOTAL AREA (SF)
	WIDTH	HEIGHT		LETTER HEIGHT	VERTICAL SPACING	ARROW RTE MKR		BACK-GROUND	LEGEND	BORDER			
R7-107bL	12	31	NO STOPPING BUS ZONE	SEE MBTA STANDARDS			6	SEE MBTA STANDARDS			P5-1 (6)	SEE NOTES	
R7-107aR	12	30	RTP Destination NO STOPPING BUS ZONE	SEE MBTA STANDARDS			7	SEE MBTA STANDARDS			P5-1 (6) MNT ON LP (1)	SEE NOTES	
SP-1	12	18	RIGHT LANE BUS ONLY		3 C 3 C 3 D 3 D	2.4 2.2 2.7 1.8 2.9	5	WHITE	BLACK	BLACK	P5-1 (2) MNT ON LP (3)	1.50	7.50
SP-2	12	18	RIDING ON SIDEWALK	SEE CITY OF CAMBRIDGE STANDARDS			1	SEE CITY OF CAMBRIDGE STANDARDS			MNT ON MA POLE	1.50	1.50
SP-3	24	18	CENTRAL SQUARE PARKING	↓	↓	↓	1	↓	↓	↓	MNT ON LP	3.00	3.00
SP-4	12	18	CAMBRIDGE TRAFFIC SIGNAL T-239 TO REPORT A MAINTENANCE PROBLEM CALL 617-349-4715	↓	↓	↓	1	↓	↓	↓	MNT ON MA POLE	1.50	1.50
SP-5	36	30	BEGIN RIGHT TURN LANE YIELD TO BUSES		4 C 4 B 4 C	2.4 2.0 1.9 1.8 2.9	5	WHITE	BLACK	BLACK	P5-1 (4) MNT ON LP (1)	7.50	37.50
SP-6	12	18	THANKS FOR NOT RIDING ON SIDEWALK	SEE CITY OF CAMBRIDGE STANDARDS			1	SEE CITY OF CAMBRIDGE STANDARDS			MNT W/ D3-17	1.50	1.50
SP-7	12	20	BUS LANE ENDS	SEE 2009 MUTCD			1	SEE 2009 MUTCD			P5-1	1.67	1.67
SBL-1	18	18	LEFT	3	2.8 1.8 3.5	6.8	2	BLUE	WHITE	WHITE		2.25	4.50
SBL-2	18	18	RIGHT	3	2.8 1.8 3.5	6.8	2	BLUE	WHITE	WHITE		2.25	4.50
SBL-3	18	18	LEFT	3	2.8 1.3 3.5	7.4	2	BLUE	WHITE	WHITE		2.25	4.50
SBL-4	18	18	RIGHT	3	2.8 1.3 3.5	7.4	2	BLUE	WHITE	WHITE		2.25	4.50
												SUBTOTAL	72.17

NOTES:
1. PROPOSED STOP AND YIELD SIGNS ARE SUBJECT TO FIELD INVESTIGATION BY THE CITY OF CAMBRIDGE TO JUSTIFY WARRANTS PRIOR TO INSTALLATION.
2. HIGH INTENSITY ENCAPSULATED LENS REFLECTIVE SHEETING SHALL BE USED FOR ALL SIGNS. THE "MANUAL ON UNIFORM TRAFFIC CONTROL DEVICES" 2009 EDITION, THE 1996 "MASSDOT CONSTRUCTION AND TRAFFIC STANDARD DETAILS" (AS RELATED TO TRAFFIC STANDARD DETAILS ONLY), CITY OF CAMBRIDGE SPECIFICATIONS, AND ALL AMENDMENTS WILL GOVERN.
3. PARKING SIGNS SHALL BE MOUNTED 45° TO CURB FACE WHILE REGULATORY AND WARNING SIGN SHALL BE MOUNTED 90° TO CURB FACE.
4. PBS = PRINT BOTH SIDES

CONFORMED SET

HDR ENGINEERING, INC.
99 HIGH STREET, SUITE 2300
BOSTON, MASSACHUSETTS 02110-2378
(617) 357-7700

McMAHON TRANSPORTATION ENGINEERS & PLANNERS

COMMONWEALTH OF MASSACHUSETTS CONOR MURPHY CIVIL No. 54506 REGISTERED PROFESSIONAL ENGINEER 8/5/2022

Scale	AS NOTED				
Date	MAY 2022				
Job No.	----				
Designed by	CPM				
Drawn by	JAV	0	CONFORMED SET	8/5/2022	
Checked by	CPM	No.	Description	Date	
Approved by	PV	REVISIONS			

THE WORKS — CAMBRIDGE DEPARTMENT OF PUBLIC WORKS

Client: CITY OF CAMBRIDGE, MA
Project: RIVER STREET INFRASTRUCTURE AND STREETSCAPE PROJECT
Drawing: **TRAFFIC SIGN SUMMARY 1**
Sheet: TR-3.01
Total Sheets: 381
File No.:

File: I:\ENGIY16043.45 RIVER STREET\HD\DWG\PLOT\7113XXX_TR(PLOT - TSS).DWG Plotted: 8/12/2022 3:43:50 PM

ID #	SIZE OF SIGN (IN)		SIGN	TEXT DIMENSIONS			NUMBERS OF SIGNS REQUIRED	COLOR			POST SIZE	UNIT AREA (SF)	TOTAL AREA (SF)
	WIDTH	HEIGHT		LETTER HEIGHT	VERTICAL SPACING	ARROW RTE. MKR.		BACK-GROUND	LEGEND	BORDER			
R1-1	30	30	STOP	SEE 2009 MUTCD			15	SEE 2009 MUTCD			P5-1 (5) MNT W/ D3-1 (1) MNT W/ R6-1 (9)	6.25	93.75
R1-5	30	30	YIELD HERE TO				5				P5-1 (3) MNT ON LP (2)	6.25	31.25
R2-1	24	30	SPEED LIMIT 25				1				MNT ON LP (1)	5.00	5.00
R2-1 (THICKLY SETTLED)	24	30	THICKLY SETTLED SPEED LIMIT 25 CITYWIDE UNLESS OTHERWISE POSTED				2				P5-1 (1) MNT W/ CT-110RA (1)	5.00	10.00
R3-1	24	24					7				P5-1 (2) MNT ON TS POST (1) MNT W/ D3-1 (1) MNT W/ R6-1 (2) MNT ON MA POLE (1)	4.00	28.00
R3-2	24	24					8				P5-1 (3) MNT W/ R6-1 (4) MNT ON LP (1)	4.00	32.00
R3-5R	30	36	ONLY				2				P5-1 (2)	7.50	15.00
R3-5L	30	36	ONLY				1				P5-1	7.50	7.50
R3-5sP	30	12	EXCEPT BUSES				5				MNT W/ R5-1 (2) MNT W/ R3-5L (3)	2.50	12.50
R3-8 (MOD)	36	30	ONLY ONLY ONLY				2				MNT W/ CT-110DA (2)	7.50	15.00
R3-12F	24	36	BUS LANE AHEAD				3				P5-1 (1) MNT W/ R3-5R (2)	6.00	18.00
R3-12H	24	36	BUS LANE BEGINS				1				MNT W/ R10-5bP	6.00	6.00
R4-7	24	30					1				MNT ON TRAF SIG POST	5.00	5.00
R5-1	30	30	DO NOT ENTER				28				P5-1 (9) MNT ON LP (2) MNT ON RRFB (2) MNT W/ R6-1 (14) MNT ON MA POLE (1)	6.25	175.00
R5-1A	36	24	WRONG WAY				2				P5-1 (2)	6.00	12.00
												SUBTOTAL	466.00

ID #	SIZE OF SIGN (IN)		SIGN	TEXT DIMENSIONS			NUMBERS OF SIGNS REQUIRED	COLOR			POST SIZE	UNIT AREA (SF)	TOTAL AREA (SF)
	WIDTH	HEIGHT		LETTER HEIGHT	VERTICAL SPACING	ARROW RTE. MKR.		BACK-GROUND	LEGEND	BORDER			
R6-1 (PBS)	36	12	ONE WAY	SEE 2009 MUTCD			35	SEE 2009 MUTCD			P5-1 (31) MNT ON MA POLE (1) MNT ON LP (3)	3.00	105.00
R6-2L	24	30	ONE WAY				1				P5-1	5.00	5.00
R10-10b	12	18	SIGNAL				10				MNT ON TRAF SIG POST (9) MNT ON MA ARM (1)	1.50	15.00
R10-11b	36	36	NO TURN ON RED				4				MNT ON LP (1) MNT ON MA POLE (1) MNT W/ R10-15bP (1) MNT W/ R3-2 (1)	9.00	36.00
R10-15bP	36	36	TURNING VEHICLES TO				3				P5-1 (2) MNT W/ R6-1 (1)	9.00	27.00
W11-2	36	36					13				P5-1 (2) MNT W/ W11-2 (2) MNT ON RRFB (9)	9.00	117.00
W11-2 (MOD)	36	24					7				MNT ON RRFB (7)	6.00	42.00
W16-7pL	24	12					12				MNT ON RRFB (10) MNT W/ W11-2 (2)	2.00	24.00
W16-7pR	24	12					8				MNT ON RRFB (6) MNT W/ W11-2 (2)	2.00	16.00
CT-110DA	12	18	TOW ZONE NO STOPPING ANYTIME	SEE CITY OF CAMBRIDGE STANDARDS			43	SEE CITY OF CAMBRIDGE STANDARDS			P5-1 (32) MNT ON LP (8) MNT W/ R6-1 (3)	1.50	64.50
CT-110LA	12	18	TOW ZONE NO STOPPING ANYTIME				16				P5-1 (15) MNT ON LP (1)	1.50	24.00
CT-110RA	12	18	TOW ZONE NO STOPPING ANYTIME				16				P5-1 (14) MNT W/ CT-199 (2)	1.50	24.00
CT-150LA	12	18	TOW ZONE NO PARKING				3				P5-1 (1) MNT W/ CT-199 (1) MNT ON LP (1)	1.50	4.50
CT-150RA	12	18	TOW ZONE NO PARKING				3				P5-1 (2) MNT ON LP (1)	1.50	4.50
												SUBTOTAL	508.50

NOTES:
1. PROPOSED STOP AND YIELD SIGNS ARE SUBJECT TO FIELD INVESTIGATION BY THE CITY OF CAMBRIDGE TO JUSTIFY WARRANTS PRIOR TO INSTALLATION.
2. HIGH INTENSITY ENCAPSULATED LENS REFLECTIVE SHEETING SHALL BE USED FOR ALL SIGNS. THE "MANUAL ON UNIFORM TRAFFIC CONTROL DEVICES" 2009 EDITION, THE 1996 "MASSDOT CONSTRUCTION AND TRAFFIC STANDARD DETAILS" (AS RELATED TO TRAFFIC STANDARD DETAILS ONLY), CITY OF CAMBRIDGE SPECIFICATIONS, AND ALL AMENDMENTS WILL GOVERN.
3. PARKING SIGNS SHALL BE MOUNTED 45° TO CURB FACE WHILE REGULATORY AND WARNING SIGN SHALL BE MOUNTED 90° TO CURB FACE.
4. PBS = PRINT BOTH SIDES

CONFORMED SET

HDR ENGINEERING, INC.
99 HIGH STREET, SUITE 2300
BOSTON, MASSACHUSETTS 02110-2378
(617) 357-7700

McMAHON TRANSPORTATION ENGINEERS & PLANNERS

COMMONWEALTH OF MASSACHUSETTS
CONOR MURPHY
CIVIL
No. 54506
REGISTERED PROFESSIONAL ENGINEER
8/5/2022

Scale	AS NOTED
Date	MAY 2022
Job No.	----
Designed by	CPM
Drawn by	JAV
Checked by	CPM
Approved by	PV

No.	Description	Date
0	CONFORMED SET	8/5/2022

REVISIONS

THE WORKS — CAMBRIDGE DEPARTMENT OF PUBLIC WORKS

Client: CITY OF CAMBRIDGE, MA
Project: RIVER STREET INFRASTRUCTURE AND STREETSCAPE PROJECT
Drawing: **TRAFFIC SIGN SUMMARY 2**
Sheet: TR-3.02
Total Sheets: 381
File No.:

File: I:\ENG\Y16043.45 RIVER STREET\HD\DWG\PLOT\7113XXX_TR(PLOT_TSS).DWG Plotted: 8/12/2022 3:43:55 PM

ID #	SIZE OF SIGN (IN)		SIGN	TEXT DIMENSIONS			NUMBERS OF SIGNS REQUIRED	COLOR			POST SIZE	UNIT AREA (S.F.)	TOTAL AREA (S.F.)
	WIDTH	HEIGHT		LETTER HEIGHT	VERTICAL SPACING	ARROW RTE. MKR.		BACK-GROUND	LEGEND	BORDER			
CT-199	12	18	TOW ZONE / NO PARKING DURING SNOW EMERGENCY	SEE CITY OF CAMBRIDGE STANDARDS			11	SEE CITY OF CAMBRIDGE STANDARDS			P5-1 (6) MNT W/ CT-110RA (2) MNT ON LP (3)	1.50	16.50
CT-200DA	12	18	PARKING BY PERMIT ONLY EXCEPT SUNDAYS				1				MNT W/ CT-199	1.50	1.50
CT-200LA	12	18	PARKING BY PERMIT ONLY EXCEPT SUNDAYS				5				P5-1(1) MNT W/ CT-110RA (2) MNT W/ CT-150RA (2)	1.50	7.50
CT-200RA	12	18	PARKING BY PERMIT ONLY EXCEPT SUNDAYS				5				MNT W/ CT-199 (1) MNT W/ CT-110LA (3), MNT W/ CT-150LA (1)	1.50	7.50
CT-210LBb	24	18	TOW ZONE / NO PARKING STREET CLEANING 8AM TO 2PM SECOND MONDAY EACH MONTH APRIL 1ST TO DEC. 31ST EXCEPT HOLIDAYS + PARKING BY PERMIT ONLY EXCEPT SUNDAYS				5				MNT W/ CT-110RA (1) MNT W/ CT-150RA (1) MNT W/ CT-199 (2) MNT W/ CT-227RA (1)	3.00	15.00
CT-210Db	24	18	TOW ZONE / NO PARKING STREET CLEANING 8AM TO 2PM SECOND MONDAY EACH MONTH APRIL 1ST TO DEC. 31ST EXCEPT HOLIDAYS + PARKING BY PERMIT ONLY EXCEPT SUNDAYS				5				P5-1 (4) MNT W/ CT-199 (1)	3.00	15.00
CT-210Ea	24	18	TOW ZONE / NO PARKING STREET CLEANING 8AM TO 2PM FIRST FRIDAY EACH MONTH APRIL 1ST TO DEC. 31ST EXCEPT HOLIDAYS + PARKING BY PERMIT ONLY EXCEPT SUNDAYS				1				MNT W/ CT-199	3.00	3.00
CT-210LAb	24	18	TOW ZONE / NO PARKING STREET CLEANING 8AM TO 2PM SECOND MONDAY EACH MONTH APRIL 1ST TO DEC. 31ST EXCEPT HOLIDAYS + PARKING BY PERMIT ONLY EXCEPT SUNDAYS				2				MNT W/ CT-110RA (2)	3.00	6.00
CT-210LDb	24	18	TOW ZONE / NO PARKING STREET CLEANING 8AM TO 2PM SECOND MONDAY EACH MONTH APRIL 1ST TO DEC. 31ST EXCEPT HOLIDAYS + PARKING BY PERMIT ONLY EXCEPT SUNDAYS				3				MNT W/ CT-110RA (2) MNT W/ CT-800RA (1)	3.00	9.00
CT-210LEb	24	18	TOW ZONE / NO PARKING STREET CLEANING 8AM TO 2PM SECOND MONDAY EACH MONTH APRIL 1ST TO DEC. 31ST EXCEPT HOLIDAYS + PARKING BY PERMIT ONLY EXCEPT SUNDAYS				1				MNT W/ CT-110RA	3.00	3.00
CT-210RBb	24	18	TOW ZONE / NO PARKING STREET CLEANING 8AM TO 2PM SECOND MONDAY EACH MONTH APRIL 1ST TO DEC. 31ST EXCEPT HOLIDAYS + PARKING BY PERMIT ONLY EXCEPT SUNDAYS				3				MNT W/ CT-110LA (1) MNT W/ CT-199 (1) MNT W/ CT-800LA (1)	3.00	9.00
CT-210RDb	24	18	TOW ZONE / NO PARKING STREET CLEANING 8AM TO 2PM SECOND MONDAY EACH MONTH APRIL 1ST TO DEC. 31ST EXCEPT HOLIDAYS + PARKING BY PERMIT ONLY EXCEPT SUNDAYS				4				MNT W/ CT-110LA (4)	3.00	12.00
CT-225DA	24	18	1 HR PARKING 8AM-6PM EXCEPT SUNDAYS				1				MNT ON LP	3.00	3.00
											SUBTOTAL		108.00

ID #	SIZE OF SIGN (IN)		SIGN	TEXT DIMENSIONS			NUMBERS OF SIGNS REQUIRED	COLOR			POST SIZE	UNIT AREA (S.F.)	TOTAL AREA (S.F.)
	WIDTH	HEIGHT		LETTER HEIGHT	VERTICAL SPACING	ARROW RTE. MKR.		BACK-GROUND	LEGEND	BORDER			
CT-225LA	24	18	1 HR PARKING 8AM-6PM EXCEPT SUNDAYS	SEE CITY OF CAMBRIDGE STANDARDS			1	SEE CITY OF CAMBRIDGE STANDARDS			MNT W/ CT-110RA (1)	3.00	3.00
CT-225RA	24	18	1 HR PARKING 8AM-6PM EXCEPT SUNDAYS				1				MNT W/ CT-300LA (1)	3.00	3.00
CT-226LA	24	18	2 HR PARKING 8AM-6PM EXCEPT SUNDAYS & TIMES NOTED BELOW				1				MNT W/ CT-800RA	3.00	3.00
CT-226RA	24	18	2 HR PARKING 8AM-6PM EXCEPT SUNDAYS & TIMES NOTED BELOW				1				MNT W/ CT-110LA (1)	3.00	3.00
CT-227DA	24	18	2 HR PARKING 8AM-6PM EXCEPT SUNDAYS				1				MNT W/ CT-199	3.00	3.00
CT-227LA	24	18	2 HR PARKING 8AM-6PM EXCEPT SUNDAYS				4				MNT W/ CT-199 (1) MNT W/ CT-110RA (2) MNT W/ CT-800LA (1)	3.00	12.00
CT-227RA	24	18	2 HR PARKING 8AM-6PM EXCEPT SUNDAYS				4				P5-1 (1) MNT W/ CT-300LA (2) MNT W/ CT-150LA (1)	3.00	12.00
CT-227DA (8PM)	24	18	2 HR PARKING 8AM-8PM EXCEPT SUNDAYS				1				P5-1 (1)	3.00	3.00
CT-227RA (8PM)	24	18	2 HR PARKING 8AM-8PM EXCEPT SUNDAYS				1				MNT W/ CT-110LA (1)	3.00	3.00
CT-300LA	24	18	TOW ZONE / NO PARKING LOADING ZONE 8AM-6PM EXCEPT SUNDAYS				3				P5-1 (2) MNT ON LP (1)	3.00	9.00
CT-300RA	24	18	TOW ZONE / NO PARKING LOADING ZONE 8AM-6PM EXCEPT SUNDAYS				3				MNT W/ CT-110LA (3)	3.00	9.00
CT-300RA (8AM-8PM)	24	18	TOW ZONE / NO PARKING LOADING ZONE 8AM-6PM EXCEPT SUNDAYS				2				MNT W/ CT-110LA (2)	3.00	6.00
											SUBTOTAL		69.00

NOTES:
1. PROPOSED STOP AND YIELD SIGNS ARE SUBJECT TO FIELD INVESTIGATION BY THE CITY OF CAMBRIDGE TO JUSTIFY WARRANTS PRIOR TO INSTALLATION.
2. HIGH INTENSITY ENCAPSULATED LENS REFLECTIVE SHEETING SHALL BE USED FOR ALL SIGNS. THE "MANUAL ON UNIFORM TRAFFIC CONTROL DEVICES" 2009 EDITION, THE 1996 "MASSDOT CONSTRUCTION AND TRAFFIC STANDARD DETAILS" (AS RELATED TO TRAFFIC STANDARD DETAILS ONLY), CITY OF CAMBRIDGE SPECIFICATIONS, AND ALL AMENDMENTS WILL GOVERN.
3. PARKING SIGNS SHALL BE MOUNTED 45° TO CURB FACE WHILE REGULATORY AND WARNING SIGN SHALL BE MOUNTED 90° TO CURB FACE.
4. PBS = PRINT BOTH SIDES

CONFORMED SET

HDR ENGINEERING, INC.
99 HIGH STREET, SUITE 2300
BOSTON, MASSACHUSETTS 02110-2378
(617) 357-7700

McMAHON TRANSPORTATION ENGINEERS & PLANNERS

COMMONWEALTH OF MASSACHUSETTS — CONOR MURPHY — CIVIL — No. 54506 — REGISTERED PROFESSIONAL ENGINEER — 8/5/2022

Scale	AS NOTED			
Date	MAY 2022			
Job No.	----			
Designed by	CPM			
Drawn by	JAV	0	CONFORMED SET	8/5/2022
Checked by	CPM	No.	Description	Date
Approved by	PV	REVISIONS		

THE WORKS — CAMBRIDGE DEPARTMENT OF PUBLIC WORKS

Client	CITY OF CAMBRIDGE, MA	Sheet TR-3.03
Project	RIVER STREET INFRASTRUCTURE AND STREETSCAPE PROJECT	Total Sheets 381
Drawing	**TRAFFIC SIGN SUMMARY 3**	File No.

File: I:\ENGIY16043.45 RIVER STREET\HD\DWG\PLOT\7113XXX_TR(PLOT_TSS).DWG Plotted: 8/12/2022 3:44:00 PM

ID #	SIZE OF SIGN (IN)		SIGN	TEXT DIMENSIONS			NUMBERS OF SIGNS REQUIRED	COLOR			POST SIZE	UNIT AREA (S.F.)	TOTAL AREA (S.F.)
	WIDTH	HEIGHT		LETTER HEIGHT	VERTICAL SPACING	ARROW RTE. MKR.		BACK-GROUND	LEGEND	BORDER			
CT-300LA (8AM-8PM)	24	18		SEE CITY OF CAMBRIDGE STANDARDS			2	SEE CITY OF CAMBRIDGE STANDARDS			MNT W/ CT-226RA (1) MNT W/ CT-110RA (1)	3.00	6.00
CT-390Ab	12	18					1				MNT W/ CT-110LA (1)	3.00	3.00
CT-390Bb	12	18					6				MNT W/ CT-110RA (4) MNT W/ CT-199 (2)	3.00	18.00
CT-800LA	12	18					5				P5-1 (1) MNT W/ CT-110RA (4)	1.50	7.50
CT-800RA	12	18					5				P5-1 (2) MNT W/ CT-199 (1) MT W/ CT-227RA (1) MNT W/ CT-200LA (1)	1.50	7.50
												SUBTOTAL	42.00

NOTES:

1. PROPOSED STOP AND YIELD SIGNS ARE SUBJECT TO FIELD INVESTIGATION BY THE CITY OF CAMBRIDGE TO JUSTIFY WARRANTS PRIOR TO INSTALLATION.
2. HIGH INTENSITY ENCAPSULATED LENS REFLECTIVE SHEETING SHALL BE USED FOR ALL SIGNS. THE "MANUAL ON UNIFORM TRAFFIC CONTROL DEVICES" 2009 EDITION, THE 1996 "MASSDOT CONSTRUCTION AND TRAFFIC STANDARD DETAILS" (AS RELATED TO TRAFFIC STANDARD DETAILS ONLY), CITY OF CAMBRIDGE SPECIFICATIONS, AND ALL AMENDMENTS WILL GOVERN.
3. PARKING SIGNS SHALL BE MOUNTED 45° TO CURB FACE WHILE REGULATORY AND WARNING SIGN SHALL BE MOUNTED 90° TO CURB FACE.
4. PBS = PRINT BOTH SIDES

CONFORMED SET

HDR ENGINEERING, INC.
99 HIGH STREET, SUITE 2300
BOSTON, MASSACHUSETTS 02110-2378
(617) 357-7700

McMAHON TRANSPORTATION ENGINEERS & PLANNERS

COMMONWEALTH OF MASSACHUSETTS — CONOR MURPHY CIVIL No. 54506 — REGISTERED PROFESSIONAL ENGINEER — 8/5/2022

Scale	AS NOTED			
Date	MAY 2022			
Job No.	----			
Designed by	CPM			
Drawn by	JAV	0	CONFORMED SET	8/5/2022
Checked by	CPM	No.	Description	Date
Approved by	PV	REVISIONS		

THE WORKS — CAMBRIDGE DEPARTMENT OF PUBLIC WORKS

Client	CITY OF CAMBRIDGE, MA	Sheet	TR-3.04
Project	RIVER STREET INFRASTRUCTURE AND STREETSCAPE PROJECT	Total Sheets	381
Drawing	**TRAFFIC SIGN SUMMARY 4**	File No.	

File: I:\ENGIY16043.45 RIVER STREET\HD\DWG\PLOT\7113XXX_TR(PLOT - TSS).DWG Plotted: 8/12/2022 3:44:04 PM

MATERIAL PLAN NOTES

1. MATERIALS PLAN PROVIDES MATERIAL DESCRIPTIONS, DETAIL REFERENCES AND GENERAL LAYOUT OF PAVING. SEE L-3.06 -L-3.07 FOR PAVEMENT ENLARGEMENTS .
2. PROVIDE CONTINUOUS CAULKED EXPANSION JOINTS WHEREVER EXTERIOR CONCRETE PAVING BASE ABUTS CURBS, WALLS AND OTHER SITE IMPROVEMENTS.
3. STAKE PROPOSED STRUCTURES, STAIRS, CURBS, WALLS, AND SITE ELEMENT LOCATIONS AND ELEVATIONS FOR ENGINEER'S APPROVAL PRIOR TO INSTALLATION OF FOUNDATIONS.
4. SEE PLANTING PLANS FOR LIMITS OF STRUCTURAL FILL
5. PLAN DETAIL IS INTENDED TO SHOW TYPICAL INTENT.
6. NEW CONCRETE SIDEWALK TO MEET AND BLEND WITH ABUTTING STAIRS, PRIVATE WALKWAYS AND ADJACENT HARDSCAPE
7. SEE L-2.01 THROUGH L-2.11 FOR PLANTER CURB LAYOUTS.
8. SEE 4/L-3.05 FOR STREET TREE PROTECTION DETAILS.
9.FOR ROADWAY SIGNAGE AND TRAFFIC SIGNALS REFER TO TSPM DRAWINGS

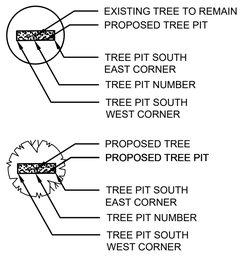

RIVER STREET TREE PIT LAYOUT LEGEND - NORTH SIDE

TREE PIT #	SOUTH-WEST CORNER (FROM)	SOUTH-EAST CORNER (TO)
N-01	12+79+.75	12+88.75

RIVER STREET TREE PIT LAYOUT LEGEND - SOUTH SIDE

TREE PIT #	SOUTH-WEST CORNER (FROM)	SOUTH-EAST CORNER (TO)
S-01	11+93.3	12+07.3
S-02	12+14.0	12+24.0
S-03	15+22.58	15+32.58
S-04	15+52.54	15+62.54
S-05	15+82.54	15+92.54

STREET TREE PIT LAYOUT NOTES:

CONTRACTOR TO LAYOUT STREET TREE PITS BASED ON ROADWAY ALIGNMENT CENTER LINE STATION POINTS

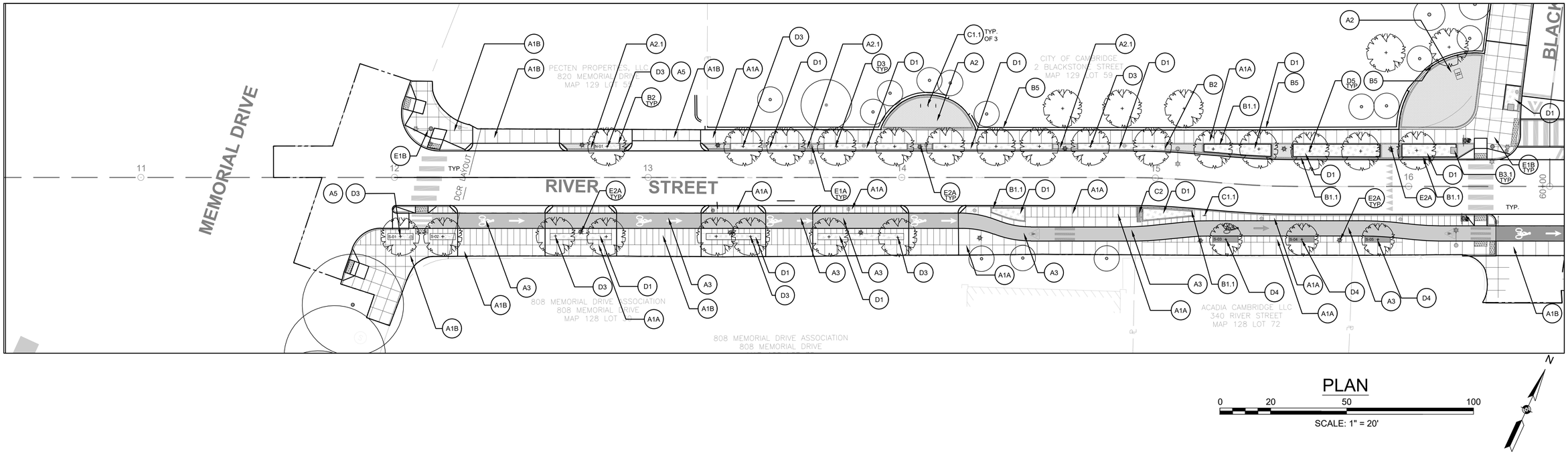

PLAN

0 20 50 100

SCALE: 1" = 20'

SEE SHEET L-1.02

MATERIALS LEGEND

SYM	TAG	DESCRIPTION	DETAIL
		PAVING	
	A1	A. 4-INCH CEMENT CONCRETE SIDEWALKS: SEE CIVIL DRAWINGS FOR DETAILS B. 6-INCH CEMENT CONCRETE SIDEWALKS : SEE CIVIL DRAWINGS FOR DETAILS	1/L3.01
	A2	BRICK PAVING ON ASPHALT BASE	2/L3.01
	A2.1	BRICK PAVING - PERMEABLE	4/L3.01 3/L3.01
	A3	CYCLE TRACK- PERVIOUS OR NON-PERVIOUS - REFER TO CIVIL DRAWINGS FOR LOCATIONS AND DETAILS	
	A4	ACCESSIBLE CURB RAMP W/ DETECTABLE WARNING STRIP-REFER TO CIVIL DRAWINGS	
	A5	MULCH AT TREE PIT	6/L3.05

TAG	DESCRIPTION	DETAIL
A6	FLEXIBLE POROUS PAVING	5/L3.01
A10	GRANITE COBBLE PAVERS-TYPE 1	7/L3.01
A10.1	GRANITE COBBLE PAVERS -TYPE 2	7/L3.01
	CURBING AND WALLS	
B1.1	GRANITE PLANTER CURB - STREETSCAPE	8/L3.01
B2	STEEL EDGING- METAL EDGING AT TREE PITS	6/L3.01
B3.1	GRANITE SEATING STONE	1/L3.02 2/L3.02
B4.1	REFURBISHED GRANITE PLANTER WALL	
B4.2	RECONFIGURED GRANITE PLANTER WALL	4/L3.02 5/L3.02

TAG	DESCRIPTION	DETAIL
B5	REFURBISHED CONCRETE WALL - REFER TO CIVIL DRAWINGS	
B9	RELOCATED ALVIN THOMPSON MONUMENT	3/L3.02
B11	GRANITE BOLLARD- TO REMAIN	
B12	GRANITE BOLLARD- SALVAGE AND RELOCATE. BOLLARD IN PLANT BED, SET IN SOIL. BOLLARD IN PAVING, SET IN PAVING SUBASE	
	SITE FURNISHINGS	
C1.1	BIKE RACK - TYPE 1	1/L3.03
C2	METAL BENCH WITH BACK	2/L3.03
C2.1	RELOCATED BENCH - CONTRACTOR TO ENSURE BENCH WITH MEMORIAL PLAQUE IS RELOCATED	2/L3.03
C3	TRASH AND RECYCLING RECEPTACLE	3/L3.03

SYM	TAG	DESCRIPTION	DETAIL
	C4	RITSUKO TAHO ART PIECES- REFER TO CIVIL DRAWINGS FOR DETAILS	
	C17	MAIL BOX	
	C18	RODENT CONTROL GEOTEXTILE	1,2,3-L3.05 5,8-L3.05
		PLANTING	
	D1	PLANTING BED	2/L3.05 9/L3.05
	D1.1	SOD LAWN	1/L3.05
	D2	TREE PLANTING	5/L3.05
	D3	TREE PLANTING - IN OPEN TREE PIT	6/L3.05
	D4	TREE PLANTING - W/ FLEXIBLE POROUS PAVING	7/L3.05

SYM	TAG	DESCRIPTION	DETAIL
	D5	TREE PLANTING - IN RAISED PLANTER	9/L3.05
		LIGHTING - REFER TO ELECTRICAL AND STRUCTURAL DRAWINGS	
	E1A	LIGHT POLE - TYPE 1A - DECORATIVE PENDANT LIGHTING FIXTURE SINGLE POLE MOUNTED- REFER TO ELEC DRAWINGS	
	E1B	LIGHT POLE - TYPE 1B - DECORATIVE PENDANT LIGHTING FIXTURE DOUBLE POLE MOUNTED- REFER TO ELEC DRAWINGS	
	E2A	LIGHT POLE -TYPE 2A- LED ACORN PEDESTRIAN LIGHT FIXTURE WITH CITY STANDARD BASE- REFER TO ELEC DRAWINGS	
		DRAINAGE AND UTILITIES	
	F3	BACKFLOW PREVENTER ENCLOSURE- REFER TO IRRIGATION DRAWINGS	
	F4	IRRIGATION CONTROLLER- REFER TO IRRIGATION DRAWINGS	

CONFORMED SET

HDR ENGINEERING, INC.
99 HIGH STREET, SUITE 2300
BOSTON, MASSACHUSETTS 02110-2378
(617) 357-7700

HALVORSON Tighe&Bond STUDIO
25 KINGSTON ST, BOSTON MA 02111-2200
(PHONE) 617.536.0380
WWW.HALVORSONDESIGN.COM

MASSACHUSETTS ROBERT URLIG No. 981 REGISTERED LANDSCAPE ARCHITECT
08/05/2022

Scale			
Date			
Job No.			
Designed by			
Drawn by	0	CONFORMED SET	8/5/2022
Checked by	No.	Description	Date
Approved by		REVISIONS	

CAMBRIDGE DEPARTMENT OF PUBLIC WORKS

Client	CITY OF CAMBRIDGE, MA	Sheet	L-1.01
Project	RIVER STREET INFRASTRUCTURE AND STREETSCAPE PROJECT	Total Sheets	381
Drawing	**STREETSCAPE MATERIALS AND STREET TREE PIT LAYOUT PLAN-1**	File No.	

File: C:\PW\WORKING\EAST01\D1174456\7113XXX_LA(DESIGN)_L-1.00 MATERIALS AND LAYOUT PLAN.DWG Plotted: 8/11/2022 8:43:07 AM

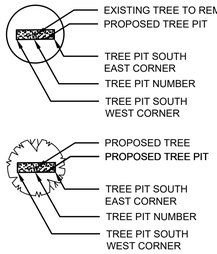

RIVER STREET TREE PIT LAYOUT LEGEND - NORTH SIDE

TREE PIT #	SOUTH-WEST CORNER (FROM)	SOUTH-EAST CORNER (TO)
N-02	17+14.46	17+24.46
N-03	17+39.29	17+49.29
N-04	17+63.79	17+73.79
N-05	17+94.75	18+04.75
N-06	18+28.58	18+38.58
N-07	19+73.75	19+83.75
N-08	20+16.37	20+26.37
N-09	20+51.83	20+61.83
N-10	21+00.83	21+10.83
N-11	21+23.08	21+33.08

RIVER STREET TREE PIT LAYOUT LEGEND - SOUTH SIDE

TREE PIT #	SOUTH-WEST CORNER (FROM)	SOUTH-EAST CORNER (TO)
S-06	17+05.58	17+15.58
S-07	17+75.12	17+85.12
S-08	19+42.58	19+52.58
S-09	19+60.46	19+70.46
S-10	19+78.33	19+88.33
S-11	20+18.29	20+28.29
S-12	20+44.37	20+44.37
S-13	20+74.42	20+84.42
S-14	21+02.75	21+12.75
S-15	21+25.83	21+35.83

STREET TREE PIT LAYOUT NOTES:

CONTRACTOR TO LAYOUT STREET TREE PITS BASED ON ROADWAY ALIGNMENT CENTER LINE STATION POINTS

SEE SHEET L-1.08

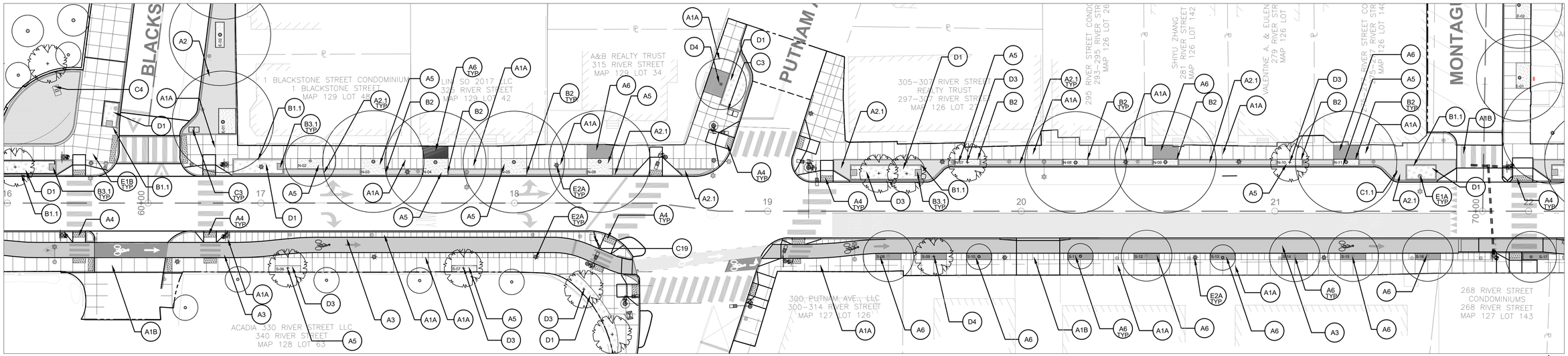

PLAN

0 20 50 100

SCALE: 1" = 20'

MATERIALS LEGEND

SYM	TAG	DESCRIPTION	DETAIL
		PAVING	
	A1	A. 4-INCH CEMENT CONCRETE SIDEWALKS: SEE CIVIL DRAWINGS FOR DETAILS B. 6-INCH CEMENT CONCRETE SIDEWALKS : SEE CIVIL DRAWINGS FOR DETAILS	1/L3.01
	A2	BRICK PAVING ON ASPHALT BASE	2/L3.01
	A2.1	BRICK PAVING - PERMEABLE	4/L3.01 9/L3.01
	A3	CYCLE TRACK- PERVIOUS OR NON-PERVIOUS - REFER TO CIVIL DRAWINGS FOR LOCATIONS AND DETAILS	
	A4	ACCESSIBLE CURB RAMP W/ DETECTABLE WARNING STRIP-REFER TO CIVIL DRAWINGS	
	A5	MULCH AT TREE PIT	6/L3.05

TAG	DESCRIPTION	DETAIL
A6	FLEXIBLE POROUS PAVING	5/L3.01
A10	GRANITE COBBLE PAVERS-TYPE 1	7/L3.01
A10.1	GRANITE COBBLE PAVERS -TYPE 2	7/L3.01
	CURBING AND WALLS	
B1.1	GRANITE PLANTER CURB - STREETSCAPE	8/L3.01
B2	STEEL EDGING- METAL EDGING AT TREE PITS	8/L3.01
B3.1	GRANITE SEATING STONE	1/L3.02 2/L3.02
B4.1	REFURBISHED GRANITE PLANTER WALL	
B4.2	RECONFIGURED GRANITE PLANTER WALL	4/L3.02 5/L3.02

TAG	DESCRIPTION	DETAIL
B5	REFURBISHED CONCRETE WALL - REFER TO CIVIL DRAWINGS	
B9	RELOCATED ALVIN THOMPSON MONUMENT	9/L3.02
B11	GRANITE BOLLARD- TO REMAIN	
B12	GRANITE BOLLARD- SALVAGE AND RELOCATE. BOLLARD IN PLANT BED, SET IN SOIL. BOLLARD IN PAVING, SET IN PAVING SUBASE	
	SITE FURNISHINGS	
C1.1	BIKE RACK - TYPE 1	1/L3.03
C2	METAL BENCH WITH BACK	2/L3.03
C2.1	RELOCATED BENCH - CONTRACTOR TO ENSURE BENCH WITH MEMORIAL PLAQUE IS RELOCATED	2/L3.03
C3	TRASH AND RECYCLING RECEPTACLE	3/L3.03

SYM	TAG	DESCRIPTION	DETAIL
	C4	RITSUKO TAHO ART PIECES- REFER TO CIVIL DRAWINGS FOR DETAILS	
	C17	MAIL BOX	
	C18	RODENT CONTROL GEOTEXTILE	1,2,3-L3.05 5,8-L3.05
		PLANTING	
	D1	PLANTING BED	2/L3.05 9/L3.05
	D1.1	SOD LAWN	1/L3.05
	D2	TREE PLANTING	5/L3.05
	D3	TREE PLANTING - IN OPEN TREE PIT	6/L3.05
	D4	TREE PLANTING - W/ FLEXIBLE POROUS PAVING	7/L3.05

SYM	TAG	DESCRIPTION	DETAIL
	D5	TREE PLANTING - IN RAISED PLANTER	9/L3.05
		LIGHTING - REFER TO ELECTRICAL AND STRUCTURAL DRAWINGS	
	E1A	LIGHT POLE - TYPE 1A - DECORATIVE PENDANT LIGHTING FIXTURE SINGLE POLE MOUNTED- REFER TO ELEC DRAWINGS	
	E1B	LIGHT POLE - TYPE 1B - DECORATIVE PENDANT LIGHTING FIXTURE DOUBLE POLE MOUNTED- REFER TO ELEC DRAWINGS	
	E2A	LIGHT POLE -TYPE 2A- LED ACORN PEDESTRIAN LIGHT FIXTURE WITH CITY STANDARD BASE- REFER TO ELEC DRAWINGS	
		DRAINAGE AND UTILITIES	
	F3	BACKFLOW PREVENTER ENCLOSURE- REFER TO IRRIGATION DRAWINGS	
	F4	IRRIGATION CONTROLLER- REFER TO IRRIGATION DRAWINGS	

CONFORMED SET

HDR ENGINEERING, INC.
99 HIGH STREET, SUITE 2300
BOSTON, MASSACHUSETTS 02110-2378
(617) 357-7700

HALVORSON Tighe&Bond STUDIO
25 KINGSTON ST, BOSTON MA 02111-2200
(PHONE) 617.536.0380
WWW.HALVORSONDESIGN.COM

MASSACHUSETTS ROBERT URLIG No. 981 REGISTERED LANDSCAPE ARCHITECT
08/05/2022

Scale			
Date			
Job No.			
Designed by			
Drawn by	0	CONFORMED SET	8/5/2022
Checked by	No.	Description	Date
Approved by		REVISIONS	

CAMBRIDGE DEPARTMENT OF PUBLIC THE WORKS

Client	CITY OF CAMBRIDGE, MA	Sheet	L-1.02
Project	RIVER STREET INFRASTRUCTURE AND STREETSCAPE PROJECT	Total Sheets	381
Drawing	**STREETSCAPE MATERIALS AND STREET TREE PIT LAYOUT PLAN-2**	File No.	

File: C:\PWORKINGEAST01D1174456\7113XXX_LA(DESIGN)_L-1.00 MATERIALS AND LAYOUT PLAN.DWG Plotted: 8/11/2022 8:43:32 AM

SEE SHEET L-1.02

SEE SHEET L-1.04

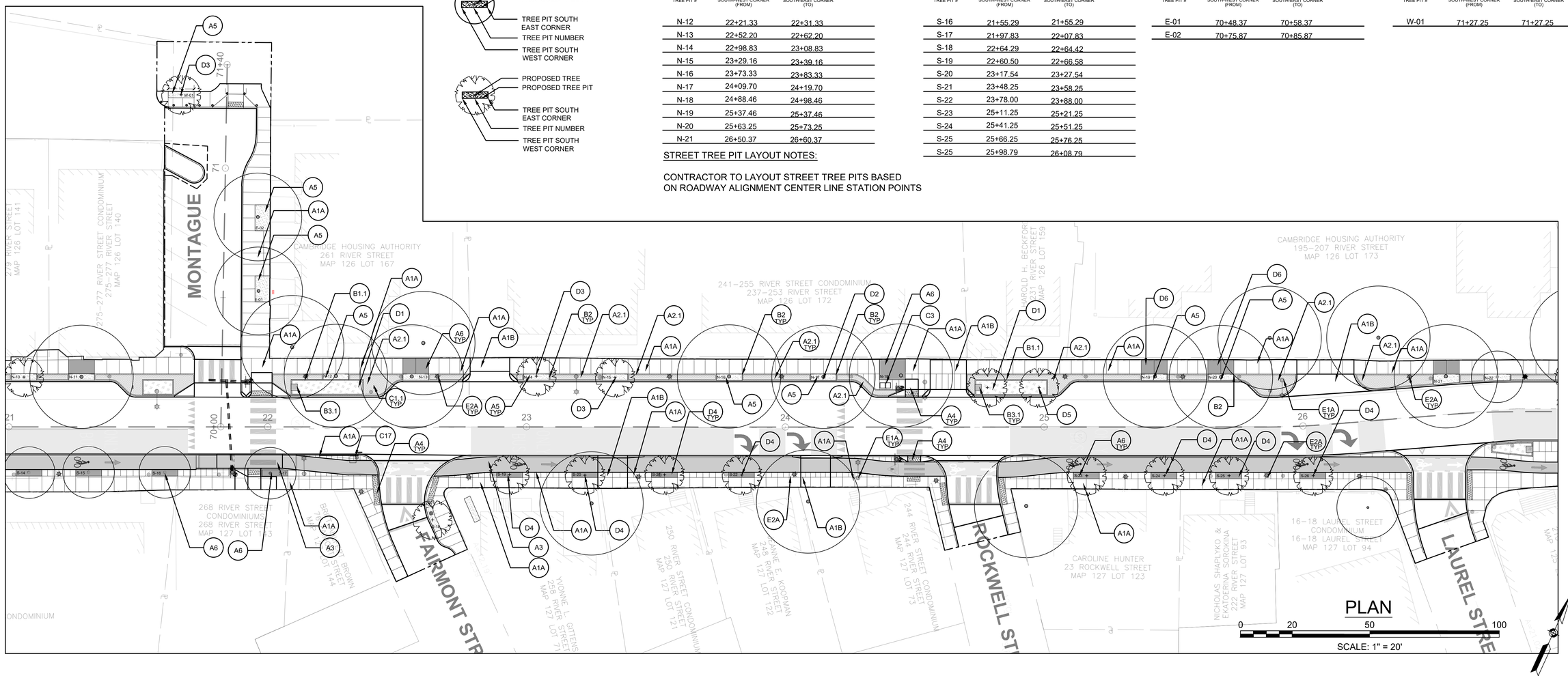

EXISTING TREE TO REMAIN
PROPOSED TREE PIT
TREE PIT SOUTH EAST CORNER
TREE PIT NUMBER
TREE PIT SOUTH WEST CORNER

PROPOSED TREE
PROPOSED TREE PIT
TREE PIT SOUTH EAST CORNER
TREE PIT NUMBER
TREE PIT SOUTH WEST CORNER

RIVER STREET TREE PIT LAYOUT LEGEND - NORTH SIDE

TREE PIT #	SOUTH-WEST CORNER (FROM)	SOUTH-EAST CORNER (TO)
N-12	22+21.33	22+31.33
N-13	22+52.20	22+62.20
N-14	22+98.83	23+08.83
N-15	23+29.16	23+39.16
N-16	23+73.33	23+83.33
N-17	24+09.70	24+19.70
N-18	24+88.46	24+98.46
N-19	25+37.46	25+37.46
N-20	25+63.25	25+73.25
N-21	26+50.37	26+60.37

RIVER STREET TREE PIT LAYOUT LEGEND - SOUTH SIDE

TREE PIT #	SOUTH-WEST CORNER (FROM)	SOUTH-EAST CORNER (TO)
S-16	21+55.29	21+55.29
S-17	21+97.83	22+07.83
S-18	22+64.29	22+64.42
S-19	22+60.50	22+66.58
S-20	23+17.54	23+27.54
S-21	23+48.25	23+58.25
S-22	23+78.00	23+88.00
S-23	25+11.25	25+21.25
S-24	25+41.25	25+51.25
S-25	25+66.25	25+76.25
S-25	25+98.79	26+08.79

MONTAGUE TREE PIT LAYOUT LEGEND - WEST SIDE

TREE PIT #	SOUTH-WEST CORNER (FROM)	SOUTH-EAST CORNER (TO)
E-01	70+48.37	70+58.37
E-02	70+75.87	70+85.87

MONTAGUE TREE PIT LAYOUT LEGEND - WEST SIDE

TREE PIT #	SOUTH-WEST CORNER (FROM)	SOUTH-EAST CORNER (TO)
W-01	71+27.25	71+27.25

STREET TREE PIT LAYOUT NOTES:

CONTRACTOR TO LAYOUT STREET TREE PITS BASED ON ROADWAY ALIGNMENT CENTER LINE STATION POINTS

MATERIALS LEGEND

SYM	TAG	DESCRIPTION	DETAIL
		PAVING	
	A1	A. 4-INCH CEMENT CONCRETE SIDEWALKS: SEE CIVIL DRAWINGS FOR DETAILS B. 6-INCH CEMENT CONCRETE SIDEWALKS : SEE CIVIL DRAWINGS FOR DETAILS	1/L3.01
	A2	BRICK PAVING ON ASPHALT BASE	2/L3.01
	A2.1	BRICK PAVING - PERMEABLE	4/L3.01 9/L3.01
	A3	CYCLE TRACK- PERVIOUS OR NON-PERVIOUS - REFER TO CIVIL DRAWINGS FOR LOCATIONS AND DETAILS	
	A4	ACCESSIBLE CURB RAMP W/ DETECTABLE WARNING STRIP-REFER TO CIVIL DRAWINGS	
	A5	MULCH AT TREE PIT	6/L3.05

TAG	DESCRIPTION	DETAIL
A6	FLEXIBLE POROUS PAVING	5/L3.01
A10	GRANITE COBBLE PAVERS-TYPE 1	7/L3.01
A10.1	GRANITE COBBLE PAVERS -TYPE 2	7/L3.01
	CURBING AND WALLS	
B1.1	GRANITE PLANTER CURB - STREETSCAPE	8/L3.01
B2	STEEL EDGING- METAL EDGING AT TREE PITS	9/L3.01
B3.1	GRANITE SEATING STONE	1/L3.02 2/L3.02
B4.1	REFURBISHED GRANITE PLANTER WALL	
B4.2	RECONFIGURED GRANITE PLANTER WALL	4/L3.02 5/L3.02

TAG	DESCRIPTION	DETAIL
B5	REFURBISHED CONCRETE WALL - REFER TO CIVIL DRAWINGS	
B9	RELOCATED ALVIN THOMPSON MONUMENT	3/L3.02
B11	GRANITE BOLLARD- TO REMAIN	
B12	GRANITE BOLLARD- SALVAGE AND RELOCATE. BOLLARD IN PLANT BED, SET IN SOIL. BOLLARD IN PAVING, SET IN PAVING SUBASE	
	SITE FURNISHINGS	
C1.1	BIKE RACK - TYPE 1	1/L3.03
C2	METAL BENCH WITH BACK	2/L3.03
C2.1	RELOCATED BENCH - CONTRACTOR TO ENSURE BENCH WITH MEMORIAL PLAQUE IS RELOCATED	2/L3.03
C3	TRASH AND RECYCLING RECEPTACLE	3/L3.03

SYM	TAG	DESCRIPTION	DETAIL
	C4	RITSUKO TAHO ART PIECES- REFER TO CIVIL DRAWINGS FOR DETAILS	
	C17	MAIL BOX	
	C18	RODENT CONTROL GEOTEXTILE	1,2,3-L3.05 5,8-L3.05
		PLANTING	
	D1	PLANTING BED	2/L3.05 9/L3.05
	D1.1	SOD LAWN	1/L3.05
	D2	TREE PLANTING	5/L3.05
	D3	TREE PLANTING - IN OPEN TREE PIT	9/L3.05
	D4	TREE PLANTING - W/ FLEXIBLE POROUS PAVING	7/L3.05

TAG	DESCRIPTION	DETAIL
D5	TREE PLANTING - IN RAISED PLANTER	9/L3.05
	LIGHTING - REFER TO ELECTRICAL AND STRUCTURAL DRAWINGS	
E1A	LIGHT POLE - TYPE 1A - DECORATIVE PENDANT LIGHTING FIXTURE SINGLE POLE MOUNTED- REFER TO ELEC DRAWINGS	
E1B	LIGHT POLE - TYPE 1B - DECORATIVE PENDANT LIGHTING FIXTURE DOUBLE POLE MOUNTED- REFER TO ELEC DRAWINGS	
E2A	LIGHT POLE -TYPE 2A- LED ACORN PEDESTRIAN LIGHT FIXTURE WITH CITY STANDARD BASE- REFER TO ELEC DRAWINGS	
	DRAINAGE AND UTILITIES	
F3	BACKFLOW PREVENTER ENCLOSURE- REFER TO IRRIGATION DRAWINGS	
F4	IRRIGATION CONTROLLER- REFER TO IRRIGATION DRAWINGS	

CONFORMED SET

HDR ENGINEERING, INC.
99 HIGH STREET, SUITE 2300
BOSTON, MASSACHUSETTS 02110–2378
(617) 357–7700

HALVORSON Tighe&Bond STUDIO
25 KINGSTON ST, BOSTON MA 02111-2200
(PHONE) 617.536.0380
WWW.HALVORSONDESIGN.COM

MASSACHUSETTS ROBERT URLIG No. 981 REGISTERED LANDSCAPE ARCHITECT
08/05/2022

Scale			
Date			
Job No.			
Designed by			
Drawn by	0	CONFORMED SET	8/5/2022
Checked by	No.	Description	Date
Approved by		REVISIONS	

THE WORKS — CAMBRIDGE DEPARTMENT OF PUBLIC WORKS

Client	CITY OF CAMBRIDGE, MA
Project	RIVER STREET INFRASTRUCTURE AND STREETSCAPE PROJECT
Drawing	**STREETSCAPE MATERIALS AND STREET TREE PIT LAYOUT PLAN-3**
Sheet	L-1.03
Total Sheets	381
File No.	

File: C:\PW\WORKING\EAST01\D1174456\7113XXX_LA(DESIGN)_L-1.00 MATERIALS AND LAYOUT
PLAN.DWG Plotted: 8/11/2022 8:43:55 AM

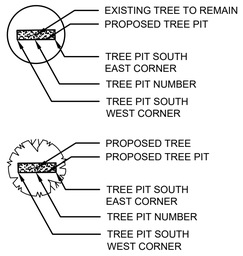

RIVER STREET TREE PIT LAYOUT LEGEND - NORTH SIDE

TREE PIT #	SOUTH-WEST CORNER (FROM)	SOUTH-EAST CORNER (TO)
N-27	26+70.04	26+80.04
N-23	27+00.12	27+10.12
N-24	27+20.12	27+30.12
N-25	27+40.12	27+50.12
N-26	27+67.96	27+74.83
N-27	28+03.75	28+09.00
N-28	28+35.79	28+45.79
N-29	28+65.79	28+75.79
N-30	29+16.46	29+26.46
N-31	29+83.42	29+93.42

RIVER STREET TREE PIT LAYOUT LEGEND - NORTH SIDE

TREE PIT #	SOUTH-WEST CORNER (FROM)	SOUTH-EAST CORNER (TO)
N-32	30+05.54	30+15.54
N-33	30+25.42	30+35.42
N-34	30+61.42	30+71.42
N-35	30+81.42	30+91.42

RIVER STREET TREE PIT LAYOUT LEGEND - SOUTH SIDE

TREE PIT #	SOUTH-WEST CORNER (FROM)	SOUTH-EAST CORNER (TO)
S-27	28+06.58	28+09.08
S-28	28+35.75	28+45.75
S-29	28+54.79	28+64.79
S-30	29+85.00	29+95.00
S-31	30+23.20	30+33.20
S-32	30+56.70	30+66.70
S-33	30+81.25	30+91.25
S-34	31+40.66	31+50.66
S-35	31+70.33	31+80.33

STREET TREE PIT LAYOUT NOTES:

CONTRACTOR TO LAYOUT STREET TREE PITS BASED ON ROADWAY ALIGNMENT CENTER LINE STATION POINTS

SEE SHEET L-1.03

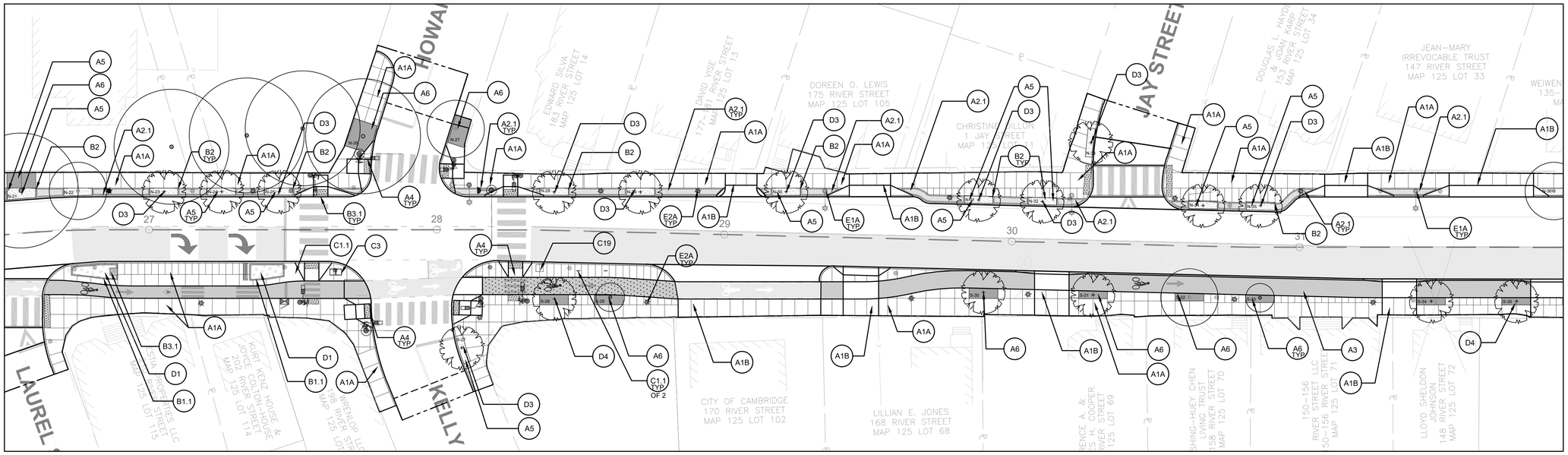

SEE SHEET L-1.05

PLAN

0 20 50 100

SCALE: 1" = 20'

MATERIALS LEGEND

SYM	TAG	DESCRIPTION	DETAIL
		PAVING	
	A1	A. 4-INCH CEMENT CONCRETE SIDEWALKS: SEE CIVIL DRAWINGS FOR DETAILS B. 6-INCH CEMENT CONCRETE SIDEWALKS : SEE CIVIL DRAWINGS FOR DETAILS	1/L3.01
	A2	BRICK PAVING ON ASPHALT BASE	2/L3.01
	A2.1	BRICK PAVING - PERMEABLE	4/L3.01 3/L3.01
	A3	CYCLE TRACK- PERVIOUS OR NON-PERVIOUS - REFER TO CIVIL DRAWINGS FOR LOCATIONS AND DETAILS	
	A4	ACCESSIBLE CURB RAMP W/ DETECTABLE WARNING STRIP-REFER TO CIVIL DRAWINGS	
	A5	MULCH AT TREE PIT	6/L3.05

TAG	DESCRIPTION	DETAIL
A6	FLEXIBLE POROUS PAVING	5/L3.01
A10	GRANITE COBBLE PAVERS-TYPE 1	7/L3.01
A10.1	GRANITE COBBLE PAVERS -TYPE 2	7/L3.01
	CURBING AND WALLS	
B1.1	GRANITE PLANTER CURB - STREETSCAPE	8/L3.01
B2	STEEL EDGING- METAL EDGING AT TREE PITS	8/L3.01
B3.1	GRANITE SEATING STONE	1/L3.02 2/L3.02
B4.1	REFURBISHED GRANITE PLANTER WALL	
B4.2	RECONFIGURED GRANITE PLANTER WALL	4/L3.02 5/L3.02

TAG	DESCRIPTION	DETAIL
B5	REFURBISHED CONCRETE WALL - REFER TO CIVIL DRAWINGS	
B9	RELOCATED ALVIN THOMPSON MONUMENT	3/L3.02
B11	GRANITE BOLLARD- TO REMAIN	
B12	GRANITE BOLLARD- SALVAGE AND RELOCATE. BOLLARD IN PLANT BED, SET IN SOIL. BOLLARD IN PAVING, SET IN PAVING SUBASE	
	SITE FURNISHINGS	
C1.1	BIKE RACK - TYPE 1	1/L3.03
C2	METAL BENCH WITH BACK	2/L3.03
C2.1	RELOCATED BENCH - CONTRACTOR TO ENSURE BENCH WITH MEMORIAL PLAQUE IS RELOCATED	2/L3.03
C3	TRASH AND RECYCLING RECEPTACLE	3/L3.03

SYM	TAG	DESCRIPTION	DETAIL
	C4	RITSUKO TAHO ART PIECES- REFER TO CIVIL DRAWINGS FOR DETAILS	
	C17	MAIL BOX	
	C18	RODENT CONTROL GEOTEXTILE	1,2,3-L3.05 5,8-L3.05
		PLANTING	
	D1	PLANTING BED	2/L3.05 9/L3.05
	D1.1	SOD LAWN	1/L3.05
	D2	TREE PLANTING	5/L3.05
	D3	TREE PLANTING - IN OPEN TREE PIT	6/L3.05
	D4	TREE PLANTING - W/ FLEXIBLE POROUS PAVING	7/L3.05

SYM	TAG	DESCRIPTION	DETAIL
	D5	TREE PLANTING - IN RAISED PLANTER	9/L3.05
		LIGHTING - REFER TO ELECTRICAL AND STRUCTURAL DRAWINGS	
	E1A	LIGHT POLE - TYPE 1A - DECORATIVE PENDANT LIGHTING FIXTURE SINGLE POLE MOUNTED- REFER TO ELEC DRAWINGS	
	E1B	LIGHT POLE - TYPE 1B - DECORATIVE PENDANT LIGHTING FIXTURE DOUBLE POLE MOUNTED- REFER TO ELEC DRAWINGS	
	E2A	LIGHT POLE -TYPE 2A- LED ACORN PEDESTRIAN LIGHT FIXTURE WITH CITY STANDARD BASE- REFER TO ELEC DRAWINGS	
		DRAINAGE AND UTILITIES	
	F3	BACKFLOW PREVENTER ENCLOSURE- REFER TO IRRIGATION DRAWINGS	
	F4	IRRIGATION CONTROLLER- REFER TO IRRIGATION DRAWINGS	

CONFORMED SET

HDR ENGINEERING, INC.
99 HIGH STREET, SUITE 2300
BOSTON, MASSACHUSETTS 02110-2378
(617) 357-7700

HALVORSON Tighe&Bond STUDIO
25 KINGSTON ST, BOSTON MA 02111-2200
(PHONE) 617.536.0380
WWW.HALVORSONDESIGN.COM

MASSACHUSETTS ROBERT URLIG REGISTERED LANDSCAPE ARCHITECT No. 981
08/05/2022

Scale			
Date			
Job No.			
Designed by			
Drawn by	0	CONFORMED SET	8/5/2022
Checked by	No.	Description	Date
Approved by		REVISIONS	

THE WORKS CAMBRIDGE DEPARTMENT OF PUBLIC WORKS

Client	CITY OF CAMBRIDGE, MA	Sheet	L-1.04
Project	RIVER STREET INFRASTRUCTURE AND STREETSCAPE PROJECT	Total Sheets	381
Drawing	**STREETSCAPE MATERIALS AND STREET TREE PIT LAYOUT PLAN-4**	File No.	

File: C:\PW\WORKING\EAST01\D1174456\7113XXX_LA(DESIGN)_L-1.00 MATERIALS AND LAYOUT PLAN.DWG Plotted: 8/11/2022 8:44:19 AM

EXISTING TREE TO REMAIN
PROPOSED TREE PIT

TREE PIT SOUTH EAST CORNER
TREE PIT NUMBER
TREE PIT SOUTH WEST CORNER

PROPOSED TREE
PROPOSED TREE PIT

TREE PIT SOUTH EAST CORNER
TREE PIT NUMBER
TREE PIT SOUTH WEST CORNER

RIVER STREET TREE PIT LAYOUT LEGEND - NORTH SIDE

TREE PIT #	SOUTH-WEST CORNER (FROM)	SOUTH-EAST CORNER (TO)
N-36	31+86.00	31+93.33
N-37	32+01.25	32+07.41
N-38	33+41.54	33+41.54
N-39	34+23.5	34+33.5
N-40	34+71.08	34+81.08
N-41	34+79.58	34+87.58
N-42	35+24.58	35+34.58

RIVER STREET TREE PIT LAYOUT LEGEND - NORTH SIDE

TREE PIT #	SOUTH-WEST CORNER (FROM)	SOUTH-EAST CORNER (TO)
N-43	36+71.83	37+34.92
N-44	36+92.66	37+02.66
N-45	37+07.79	37+17.79
N-46	37+24.92	37+34.92

RIVER STREET TREE PIT LAYOUT LEGEND - SOUTH SIDE

TREE PIT #	SOUTH-WEST CORNER (FROM)	SOUTH-EAST CORNER (TO)
S-36	32+06.20	32+16.20
S-37	34+93.62	35+03.62
S-38	35+38.87	35+48.87
S-39	35+84.25	35+94.25
S-40	36+15.83	36+25.83
S-41	36+47.33	36+57.33
S-42	36+73.16	36+83.16
S-43	36+94.46	36+96.96

PLEASANT STREET TREE PIT LAYOUT LEGEND - WEST SIDE

TREE PIT #	SOUTH-WEST CORNER (FROM)	SOUTH-EAST CORNER (TO)
W-01	100+59.79	100+69.79

STREET TREE PIT LAYOUT NOTES:

CONTRACTOR TO LAYOUT STREET TREE PITS BASED ON ROADWAY ALIGNMENT CENTER LINE STATION POINTS

SEE SHEET L-1.04

SEE SHEET L-1.06

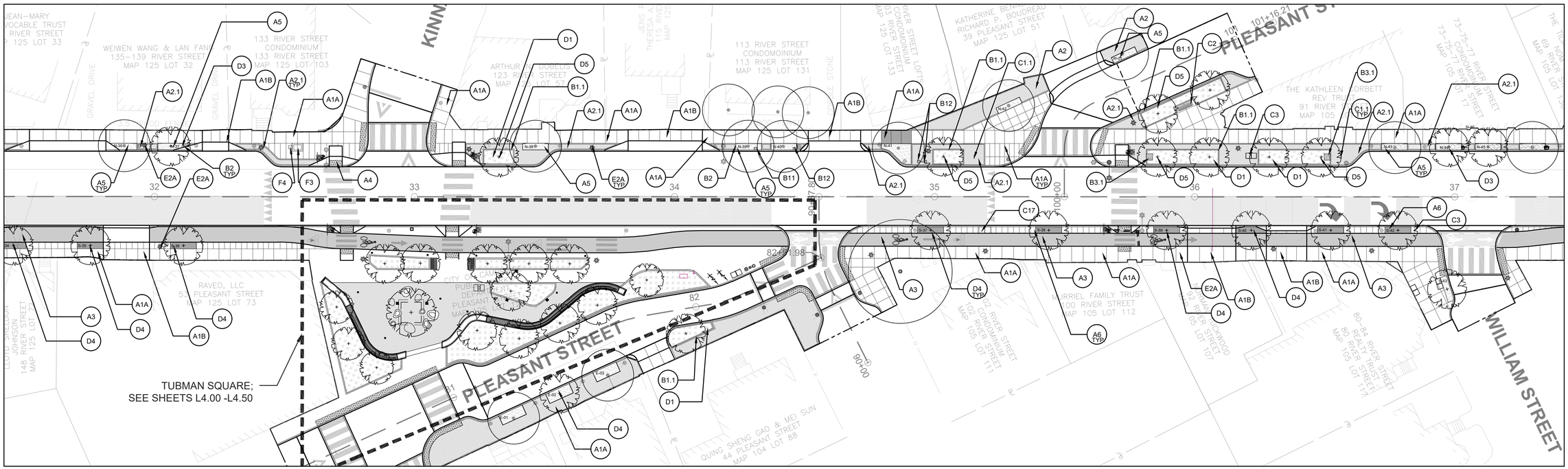

PLAN

0 20 50 100

SCALE: 1" = 20'

MATERIALS LEGEND

SYM	TAG	DESCRIPTION	DETAIL
		PAVING	
	A1	A. 4-INCH CEMENT CONCRETE SIDEWALKS: SEE CIVIL DRAWINGS FOR DETAILS B. 6-INCH CEMENT CONCRETE SIDEWALKS : SEE CIVIL DRAWINGS FOR DETAILS	1/L3.01
	A2	BRICK PAVING ON ASPHALT BASE	2/L3.01
	A2.1	BRICK PAVING - PERMEABLE	4/L3.01 3/L3.01
	A3	CYCLE TRACK- PERVIOUS OR NON-PERVIOUS - REFER TO CIVIL DRAWINGS FOR LOCATIONS AND DETAILS	
	A4	ACCESSIBLE CURB RAMP W/ DETECTABLE WARNING STRIP-REFER TO CIVIL DRAWINGS	
	A5	MULCH AT TREE PIT	5/L3.05

SCALE 1/8"=1'-0"

TAG	DESCRIPTION	DETAIL
A6	FLEXIBLE POROUS PAVING	6/L3.01
A10	GRANITE COBBLE PAVERS-TYPE 1	7/L3.01
A10.1	GRANITE COBBLE PAVERS -TYPE 2	7/L3.01
	CURBING AND WALLS	
B1.1	GRANITE PLANTER CURB - STREETSCAPE	9/L3.01
B2	STEEL EDGING- METAL EDGING AT TREE PITS	8/L3.01
B3.1	GRANITE SEATING STONE	1/L3.02 2/L3.02
B4.1	REFURBISHED GRANITE PLANTER WALL	
B4.2	RECONFIGURED GRANITE PLANTER WALL	4/L3.02 5/L3.02

TAG	DESCRIPTION	DETAIL
B5	REFURBISHED CONCRETE WALL - REFER TO CIVIL DRAWINGS	
B9	RELOCATED ALVIN THOMPSON MONUMENT	9/L3.02
B11	GRANITE BOLLARD- TO REMAIN	
B12	GRANITE BOLLARD- SALVAGE AND RELOCATE. BOLLARD IN PLANT BED, SET IN SOIL. BOLLARD IN PAVING, SET IN PAVING SUBASE	
	SITE FURNISHINGS	
C1.1	BIKE RACK - TYPE 1	1/L3.03
C2	METAL BENCH WITH BACK	2/L3.03
C2.1	RELOCATED BENCH - CONTRACTOR TO ENSURE BENCH WITH MEMORIAL PLAQUE IS RELOCATED	2/L3.03
C3	TRASH AND RECYCLING RECEPTACLE	3/L3.03

SYM	TAG	DESCRIPTION	DETAIL
	C4	RITSUKO TAHO ART PIECES- REFER TO CIVIL DRAWINGS FOR DETAILS	
	C17	MAIL BOX	
	C18	RODENT CONTROL GEOTEXTILE	1,2,3-L3.05 5,6-L3.05
		PLANTING	
	D1	PLANTING BED	2/L3.05 9/L3.05
	D1.1	SOD LAWN	4/L3.05
	D2	TREE PLANTING	5/L3.05
	D3	TREE PLANTING - IN OPEN TREE PIT	6/L3.05
	D4	TREE PLANTING - W/ FLEXIBLE POROUS PAVING	7/L3.05

SYM	TAG	DESCRIPTION	DETAIL
	D5	TREE PLANTING - IN RAISED PLANTER	8/L3.05
		LIGHTING - REFER TO ELECTRICAL AND STRUCTURAL DRAWINGS	
	E1A	LIGHT POLE - TYPE 1A - DECORATIVE PENDANT LIGHTING FIXTURE SINGLE POLE MOUNTED- REFER TO ELEC DRAWINGS	
	E1B	LIGHT POLE - TYPE 1B - DECORATIVE PENDANT LIGHTING FIXTURE DOUBLE POLE MOUNTED- REFER TO ELEC DRAWINGS	
	E2A	LIGHT POLE -TYPE 2A- LED ACORN PEDESTRIAN LIGHT FIXTURE WITH CITY STANDARD BASE- REFER TO ELEC DRAWINGS	
		DRAINAGE AND UTILITIES	
	F3	BACKFLOW PREVENTER ENCLOSURE- REFER TO IRRIGATION DRAWINGS	
	F4	IRRIGATION CONTROLLER- REFER TO IRRIGATION DRAWINGS	

CONFORMED SET

HDR ENGINEERING, INC.
99 HIGH STREET, SUITE 2300
BOSTON, MASSACHUSETTS 02110-2378
(617) 357-7700

HALVORSON Tighe&Bond STUDIO
25 KINGSTON ST, BOSTON MA 02111-2200
(PHONE) 617.536.0380
WWW.HALVORSONDESIGN.COM

MASSACHUSETTS ROBERT URLIG REGISTERED LANDSCAPE ARCHITECT NO. 981
08/05/2022

Scale			
Date			
Job No.			
Designed by			
Drawn by	0	CONFORMED SET	8/5/2022
Checked by	No.	Description	Date
Approved by		REVISIONS	

THE WORKS — CAMBRIDGE DEPARTMENT OF PUBLIC WORKS

Client	CITY OF CAMBRIDGE, MA
Project	RIVER STREET INFRASTRUCTURE AND STREETSCAPE PROJECT
Drawing	**STREETSCAPE MATERIALS AND STREET TREE PIT LAYOUT PLAN-5**
Sheet	L-1.05
Total Sheets	381
File No.	

File: C:\PWWORKINGIEAST01\D1117445617113XXX_LA(DESIGN)_L-1.00 MATERIALS AND LAYOUT PLAN.DWG Plotted: 8/11/2022 8:44:44 AM

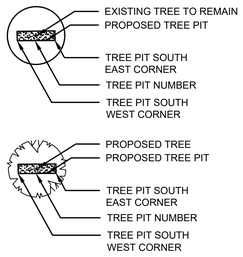

RIVER STREET TREE PIT LAYOUT LEGEND - NORTH SIDE

TREE PIT #	SOUTH-WEST CORNER (FROM)	SOUTH-EAST CORNER (TO)
N-47	37+51.58	37+61.58
N-48	37+71.33	37+81.33
N-49	37+91.33	38+01.33
N-50	38+08.00	38+18.00
N-51	38+36.08	38+46.08
N-52	38+50.25	38+60.25
N-53	39+16.66	39+19.16
N-54	39+67.25	39+77.25
N-55	39+86.63	39+96.63
N-56	40+66.75	40+76.75

RIVER STREET TREE PIT LAYOUT LEGEND - SOUTH SIDE

TREE PIT #	SOUTH-WEST CORNER (FROM)	SOUTH-EAST CORNER (TO)
S-45	37+59.08	37+69.08
S-46	37+90.16	38+00.16
S-47	38+25.58	38+35.58
S-48	38+61.16	38+71.16
S-49	39+19.77	39+24.27
S-50	39+54.00	39+56.27
S-51	39+75.25	39+85.25
S-52	40+00.12	40+10.12
S-53	40+35.25	40+45.25
S-54	40+56.33	40+66.33
S-55	40+76.33	40+86.33
S-56	41+12.42	41+22.42
S-57	41+37.42	41+47.42

STREET TREE PIT LAYOUT NOTES:

CONTRACTOR TO LAYOUT STREET TREE PITS BASED ON ROADWAY ALIGNMENT CENTER LINE STATION POINTS

PLAN

0 20 50 100

SCALE: 1" = 20'

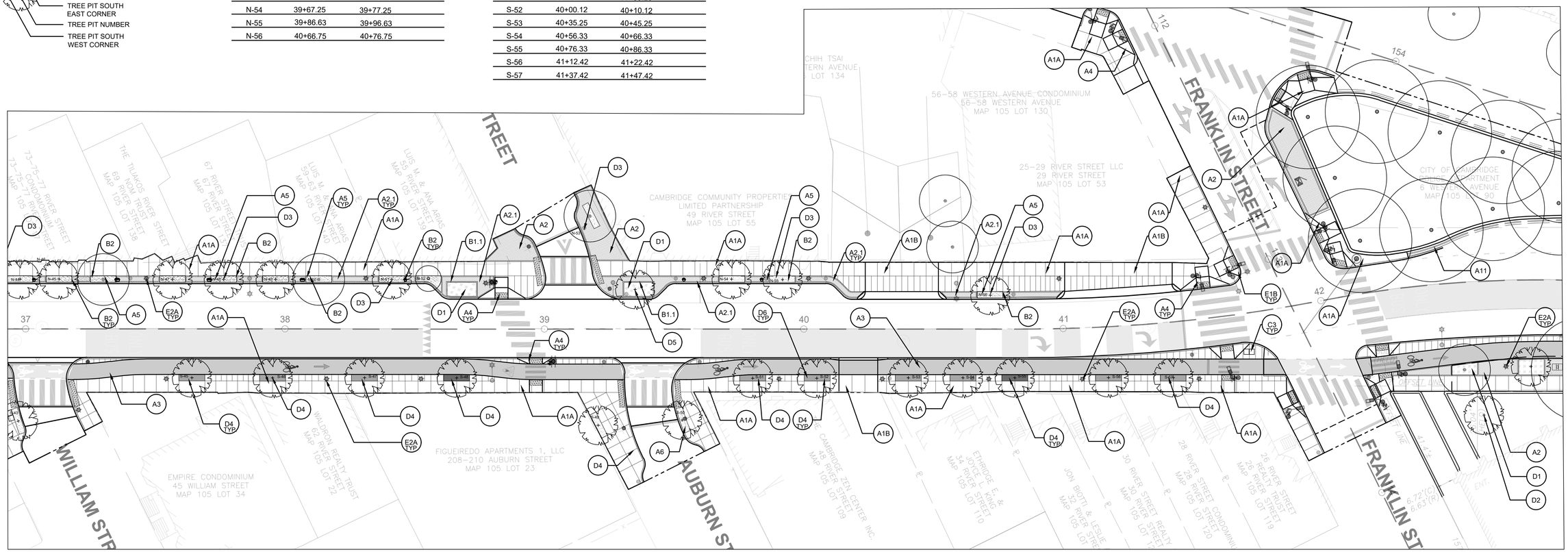

MATERIALS LEGEND

SYM	TAG	DESCRIPTION	DETAIL
		PAVING	
	A1	A. 4-INCH CEMENT CONCRETE SIDEWALKS: SEE CIVIL DRAWINGS FOR DETAILS B. 6-INCH CEMENT CONCRETE SIDEWALKS : SEE CIVIL DRAWINGS FOR DETAILS	1/L3.01
	A2	BRICK PAVING ON ASPHALT BASE	2/L3.01
	A2.1	BRICK PAVING - PERMEABLE	4/L3.01 5/L3.01
	A3	CYCLE TRACK- PERVIOUS OR NON-PERVIOUS - REFER TO CIVIL DRAWINGS FOR LOCATIONS AND DETAILS	
	A4	ACCESSIBLE CURB RAMP W/ DETECTABLE WARNING STRIP-REFER TO CIVIL DRAWINGS	
	A5	MULCH AT TREE PIT	5/L3.05

TAG	DESCRIPTION	DETAIL
A6	FLEXIBLE POROUS PAVING	6/L3.01
A10.1	GRANITE COBBLE PAVERS-TYPE 1	7/L3.01
A10.1	GRANITE COBBLE PAVERS -TYPE 2	7/L3.01
	CURBING AND WALLS	
B1.1	GRANITE PLANTER CURB - STREETSCAPE	9/L3.01
B2	STEEL EDGING- METAL EDGING AT TREE PITS	8/L3.01
B3.1	GRANITE SEATING STONE	1/L3.02 2/L3.02
B4.1	REFURBISHED GRANITE PLANTER WALL	
B4.2	RECONFIGURED GRANITE PLANTER WALL	4/L3.02 5/L3.02

TAG	DESCRIPTION	DETAIL
B5	REFURBISHED CONCRETE WALL - REFER TO CIVIL DRAWINGS	
B9	RELOCATED ALVIN THOMPSON MONUMENT	9/L3.02
B11	GRANITE BOLLARD- TO REMAIN	
B12	GRANITE BOLLARD- SALVAGE AND RELOCATE. BOLLARD IN PLANT BED, SET IN SOIL. BOLLARD IN PAVING, SET IN PAVING SUBASE	
	SITE FURNISHINGS	
C1.1	BIKE RACK - TYPE 1	1/L3.03
C2	METAL BENCH WITH BACK	2/L3.03
C2.1	RELOCATED BENCH - CONTRACTOR TO ENSURE BENCH WITH MEMORIAL PLAQUE IS RELOCATED	2/L3.03
C3	TRASH AND RECYCLING RECEPTACLE	3/L3.03

SYM	TAG	DESCRIPTION	DETAIL
	C4	RITSUKO TAHO ART PIECES- REFER TO CIVIL DRAWINGS FOR DETAILS	
	C17	MAIL BOX	
	C18	RODENT CONTROL GEOTEXTILE	1,2,3-L3.05 5,6-L3.05
		PLANTING	
	D1	PLANTING BED	2/L3.05 9/L3.05
	D1.1	SOD LAWN	4/L3.05
	D2	TREE PLANTING	5/L3.05
	D3	TREE PLANTING - IN OPEN TREE PIT	6/L3.05
	D4	TREE PLANTING - W/ FLEXIBLE POROUS PAVING	7/L3.05

SYM	TAG	DESCRIPTION	DETAIL
	D5	TREE PLANTING - IN RAISED PLANTER	8/L3.05
		LIGHTING - REFER TO ELECTRICAL AND STRUCTURAL DRAWINGS	
	E1A	LIGHT POLE - TYPE 1A - DECORATIVE PENDANT LIGHTING FIXTURE SINGLE POLE MOUNTED- REFER TO ELEC DRAWINGS	
	E1B	LIGHT POLE - TYPE 1B - DECORATIVE PENDANT LIGHTING FIXTURE DOUBLE POLE MOUNTED- REFER TO ELEC DRAWINGS	
	E2A	LIGHT POLE -TYPE 2A- LED ACORN PEDESTRIAN LIGHT FIXTURE WITH CITY STANDARD BASE- REFER TO ELEC DRAWINGS	
		DRAINAGE AND UTILITIES	
	F3	BACKFLOW PREVENTER ENCLOSURE- REFER TO IRRIGATION DRAWINGS	
	F4	IRRIGATION CONTROLLER- REFER TO IRRIGATION DRAWINGS	

CONFORMED SET

HDR ENGINEERING, INC.
99 HIGH STREET, SUITE 2300
BOSTON, MASSACHUSETTS 02110-2378
(617) 357-7700

HALVORSON Tighe&Bond STUDIO
25 KINGSTON ST, BOSTON MA 02111-2200
(PHONE) 617.536.0380
WWW.HALVORSONDESIGN.COM

MASSACHUSETTS ROBERT URLIG REGISTERED LANDSCAPE ARCHITECT NO. 981
08/05/2022

Scale			
Date			
Job No.			
Designed by			
Drawn by	0	CONFORMED SET	8/5/2022
Checked by	No.	Description	Date
Approved by		REVISIONS	

CAMBRIDGE DEPARTMENT OF PUBLIC WORKS

Client	CITY OF CAMBRIDGE, MA
Project	RIVER STREET INFRASTRUCTURE AND STREETSCAPE PROJECT
Drawing	**STREETSCAPE MATERIALS AND STREET TREE PIT LAYOUT PLAN-6**
Sheet	L-1.06
Total Sheets	381
File No.	

File: C:\PW\WORKING\EAST01\D1174456\7113XXX_LA(DESIGN)_L-1.00 MATERIALS AND LAYOUT PLAN.DWG Plotted: 8/11/2022 8:45:09 AM

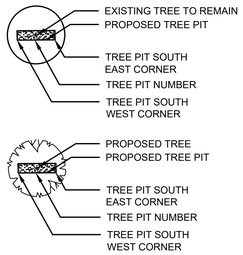

RIVER STREET TREE PIT LAYOUT LEGEND - NORTH SIDE

TREE PIT #	SOUTH-WEST CORNER (FROM)	SOUTH-EAST CORNER (TO)
N-57	44+81.58	44+91.58
N-58	44+97.70	45+07.70
N-59	45+14.46	45+24.46
N-60	45+30.50	45+40.50
N-61	46+26.54	46+32.54
N-62	46+42.62	46+49.62
N-63	46+62.70	46+67.70

STREET TREE PIT LAYOUT NOTES:

CONTRACTOR TO LAYOUT STREET TREE PITS BASED ON ROADWAY ALIGNMENT CENTER LINE STATION POINTS

PLAN

0 20 50 100

SCALE: 1" = 20'

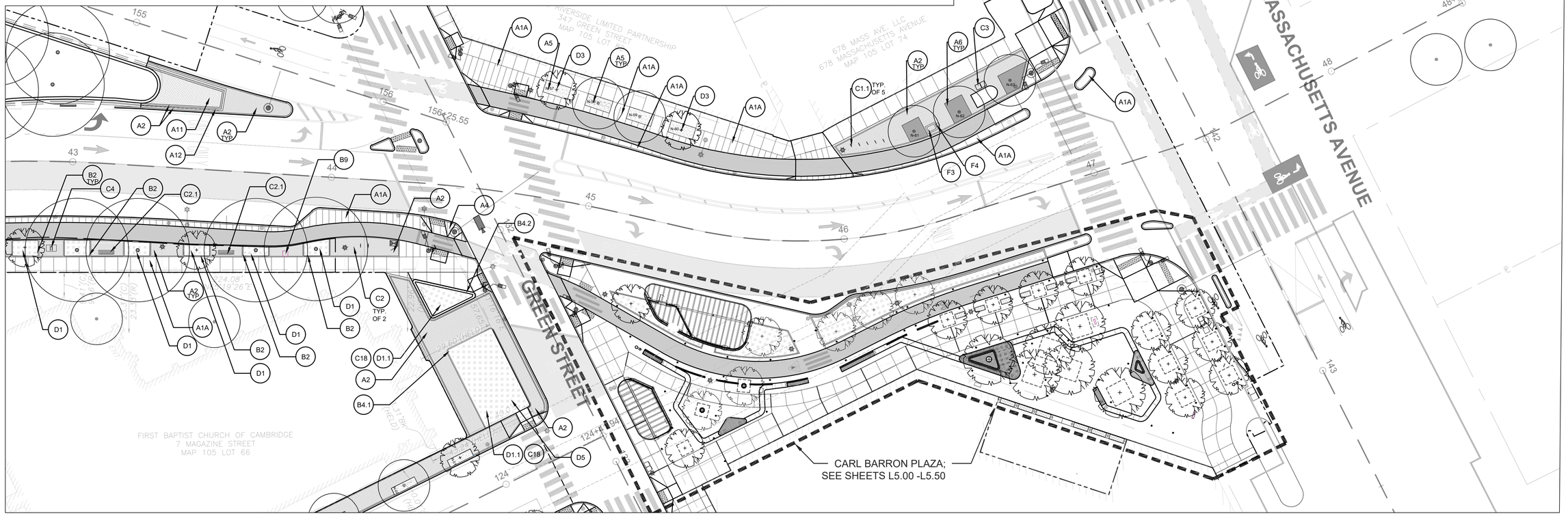

MATERIALS LEGEND

SEE SHEET L-1.10

SYM	TAG	DESCRIPTION	DETAIL
		PAVING	
	A1	A. 4-INCH CEMENT CONCRETE SIDEWALKS: SEE CIVIL DRAWINGS FOR DETAILS B. 6-INCH CEMENT CONCRETE SIDEWALKS : SEE CIVIL DRAWINGS FOR DETAILS	1/L3.01
	A2	BRICK PAVING ON ASPHALT BASE	2/L3.01
	A2.1	BRICK PAVING - PERMEABLE	4/L3.01 3/L3.01
	A3	CYCLE TRACK- PERVIOUS OR NON-PERVIOUS - REFER TO CIVIL DRAWINGS FOR LOCATIONS AND DETAILS	
	A4	ACCESSIBLE CURB RAMP W/ DETECTABLE WARNING STRIP-REFER TO CIVIL DRAWINGS	
	A5	MULCH AT TREE PIT	6/L3.05
	A6	FLEXIBLE POROUS PAVING	5/L3.01
	A10	GRANITE COBBLE PAVERS-TYPE 1	7/L3.01
	A10.1	GRANITE COBBLE PAVERS -TYPE 2	7/L3.01
		CURBING AND WALLS	
	B1.1	GRANITE PLANTER CURB - STREETSCAPE	9/L3.01
	B2	STEEL EDGING- METAL EDGING AT TREE PITS	6/L3.01
	B3.1	GRANITE SEATING STONE	1/L3.02 2/L3.02
	B4.1	REFURBISHED GRANITE PLANTER WALL	
	B4.2	RECONFIGURED GRANITE PLANTER WALL	4/L3.02 5/L3.02
	B5	REFURBISHED CONCRETE WALL - REFER TO CIVIL DRAWINGS	
	B9	RELOCATED ALVIN THOMPSON MONUMENT	3/L3.02
	B11	GRANITE BOLLARD- TO REMAIN	
	B12	GRANITE BOLLARD- SALVAGE AND RELOCATE. BOLLARD IN PLANT BED, SET IN SOIL. BOLLARD IN PAVING, SET IN PAVING SUBASE	
		SITE FURNISHINGS	
	C1.1	BIKE RACK - TYPE 1	1/L3.03
	C2	METAL BENCH WITH BACK	2/L3.03
	C2.1	RELOCATED BENCH - CONTRACTOR TO ENSURE BENCH WITH MEMORIAL PLAQUE IS RELOCATED	2/L3.03
	C3	TRASH AND RECYCLING RECEPTACLE	3/L3.03
	C4	RITSUKO TAHO ART PIECES- REFER TO CIVIL DRAWINGS FOR DETAILS	
	C17	MAIL BOX	
	C18	RODENT CONTROL GEOTEXTILE	1,2,3-L3.05 5,8-L3.05
		PLANTING	
	D1	PLANTING BED	2/L3.05 3/L3.05
	D1.1	SOD LAWN	1/L3.05
	D2	TREE PLANTING	5/L3.05
	D3	TREE PLANTING - IN OPEN TREE PIT	6/L3.05
	D4	TREE PLANTING - W/ FLEXIBLE POROUS PAVING	7/L3.05
	D5	TREE PLANTING - IN RAISED PLANTER	8/L3.05
		LIGHTING - REFER TO ELECTRICAL AND STRUCTURAL DRAWINGS	
	E1A	LIGHT POLE - TYPE 1A - DECORATIVE PENDANT LIGHTING FIXTURE SINGLE POLE MOUNTED- REFER TO ELEC DRAWINGS	
	E1B	LIGHT POLE - TYPE 1B - DECORATIVE PENDANT LIGHTING FIXTURE DOUBLE POLE MOUNTED- REFER TO ELEC DRAWINGS	
	E2A	LIGHT POLE -TYPE 2A- LED ACORN PEDESTRIAN LIGHT FIXTURE WITH CITY STANDARD BASE- REFER TO ELEC DRAWINGS	
		DRAINAGE AND UTILITIES	
	F3	BACKFLOW PREVENTER ENCLOSURE- REFER TO IRRIGATION DRAWINGS	
	F4	IRRIGATION CONTROLLER- REFER TO IRRIGATION DRAWINGS	

CONFORMED SET

HDR ENGINEERING, INC.
99 HIGH STREET, SUITE 2300
BOSTON, MASSACHUSETTS 02110-2378
(617) 357-7700

HALVORSON Tighe&Bond STUDIO
25 KINGSTON ST, BOSTON MA 02111-2200
(PHONE) 617.536.0380
WWW.HALVORSONDESIGN.COM

MASSACHUSETTS ROBERT URUIG REGISTERED LANDSCAPE ARCHITECT NO. 981
08/05/2022

Scale			
Date			
Job No.			
Designed by			
Drawn by	0	CONFORMED SET	8/5/2022
Checked by	No.	Description	Date
Approved by	REVISIONS		

THE WORKS — CAMBRIDGE DEPARTMENT OF PUBLIC WORKS

Client	CITY OF CAMBRIDGE, MA	Sheet	L-1.07
Project	RIVER STREET INFRASTRUCTURE AND STREETSCAPE PROJECT	Total Sheets	381
Drawing	**STREETSCAPE MATERIALS AND STREET TREE PIT LAYOUT PLAN-7**	File No.	

File: C:\PW\WORKING\EAST01\D1174456\7113XXX_LA(DESIGN)_L-1.00 MATERIALS AND LAYOUT PLAN.DWG Plotted: 8/11/2022 8:45:35 AM

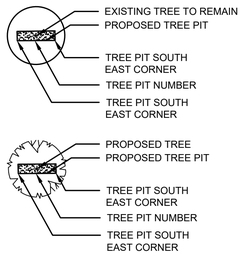

BLACKSTONE STREET TREE PIT LAYOUT LEGEND - WEST SIDE

TREE PIT #	NORTH-EAST CORNER (FROM)	SOUTH-EAST CORNER (TO)
W-01	61+13.20	61+23.20
W-02	61+43.96	61+53.96
W-03	61+70.46	61+80.46
W-04	61+94.58	62+04.58
W-05	62+18.79	62+28.79
W-06	62+43.00	62+53.00
W-07	62+67.20	62+77.20
W-08	62+91.66	63+01.66
W-09	63+40.04	63+50.04
W-10	63+67.46	63+77.46
W-11	65+33.12	65+43.12

BLACKSTONE STREET TREE PIT LAYOUT LEGEND - EAST SIDE

TREE PIT #	NORTH-WEST CORNER (FROM)	SOUTH-WEST CORNER (TO)
E-01	60+27.92	60+37.92
E-02	60+61.20	60+71.20
E-03	60+86.96	60+96.96
E-04	61+19.79	61+29.79
E-05	61+44.20	61+54.20
E-06	61+57.37	61+67.37
E-07	61+73.46	61+83.46
E-08	61+90.92	62+01.58
E-09	62+06.79	62+16.79
E-10	62+23.25	62+33.25
E-11	62+91.75	63+01.75
E-12	63+40.04	63+50.04
E-13	63+67.50	63+77.50
E-14	64+67.33	64+77.33
E-15	64+90.79	65+00.79
E-16	65+35.58	65+45.58

STREET TREE PIT LAYOUT NOTES:

CONTRACTOR TO LAYOUT STREET TREE PITS BASED ON ROADWAY ALIGNMENT CENTER LINE STATION POINTS

SEE SHEET L-1.02

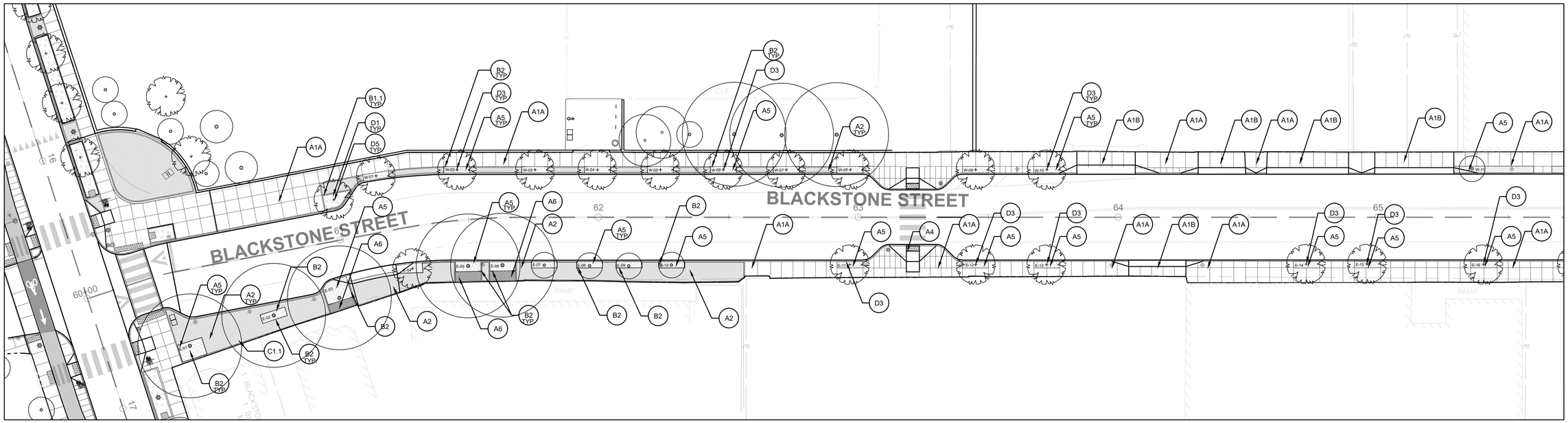

SEE SHEET L-1.09

PLAN

0 20 50 100

SCALE: 1" = 20'

N

MATERIALS LEGEND

SYM	TAG	DESCRIPTION	DETAIL
		PAVING	
	A1	A. 4-INCH CEMENT CONCRETE SIDEWALKS: SEE CIVIL DRAWINGS FOR DETAILS B. 6-INCH CEMENT CONCRETE SIDEWALKS : SEE CIVIL DRAWINGS FOR DETAILS	1/L3.01
	A2	BRICK PAVING ON ASPHALT BASE	2/L3.01
	A2.1	BRICK PAVING - PERMEABLE	4/L3.01 3/L3.01
	A3	CYCLE TRACK- PERVIOUS OR NON-PERVIOUS - REFER TO CIVIL DRAWINGS FOR LOCATIONS AND DETAILS	
	A4	ACCESSIBLE CURB RAMP W/ DETECTABLE WARNING STRIP-REFER TO CIVIL DRAWINGS	
	A5	MULCH AT TREE PIT	6/L3.05

TAG	DESCRIPTION	DETAIL
A6	FLEXIBLE POROUS PAVING	5/L3.01
A10	GRANITE COBBLE PAVERS-TYPE 1	7/L3.01
A10.1	GRANITE COBBLE PAVERS -TYPE 2	7/L3.01
	CURBING AND WALLS	
B1.1	GRANITE PLANTER CURB - STREETSCAPE	8/L3.01
B2	STEEL EDGING- METAL EDGING AT TREE PITS	6/L3.01
B3.1	GRANITE SEATING STONE	1/L3.02 2/L3.02
B4.1	REFURBISHED GRANITE PLANTER WALL	
B4.2	RECONFIGURED GRANITE PLANTER WALL	4/L3.02 5/L3.02

TAG	DESCRIPTION	DETAIL
B5	REFURBISHED CONCRETE WALL - REFER TO CIVIL DRAWINGS	
B9	RELOCATED ALVIN THOMPSON MONUMENT	3/L3.02
B11	GRANITE BOLLARD- TO REMAIN	
B12	GRANITE BOLLARD- SALVAGE AND RELOCATE. BOLLARD IN PLANT BED, SET IN SOIL. BOLLARD IN PAVING, SET IN PAVING SUBASE	
	SITE FURNISHINGS	
C1.1	BIKE RACK - TYPE 1	1/L3.03
C2	METAL BENCH WITH BACK	2/L3.03
C2.1	RELOCATED BENCH - CONTRACTOR TO ENSURE BENCH WITH MEMORIAL PLAQUE IS RELOCATED	2/L3.03
C3	TRASH AND RECYCLING RECEPTACLE	3/L3.03

SYM	TAG	DESCRIPTION	DETAIL
	C4	RITSUKO TAHO ART PIECES- REFER TO CIVIL DRAWINGS FOR DETAILS	
	C17	MAIL BOX	
	C18	RODENT CONTROL GEOTEXTILE	1,2,3-L3.05 5,8-L3.05
		PLANTING	
	D1	PLANTING BED	2/L3.05 3/L3.05
	D1.1	SOD LAWN	1/L3.05
	D2	TREE PLANTING	5/L3.05
	D3	TREE PLANTING - IN OPEN TREE PIT	6/L3.05
	D4	TREE PLANTING - W/ FLEXIBLE POROUS PAVING	7/L3.05

SYM	TAG	DESCRIPTION	DETAIL
	D5	TREE PLANTING - IN RAISED PLANTER	9/L3.05
		LIGHTING - REFER TO ELECTRICAL AND STRUCTURAL DRAWINGS	
	E1A	LIGHT POLE - TYPE 1A - DECORATIVE PENDANT LIGHTING FIXTURE SINGLE POLE MOUNTED- REFER TO ELEC DRAWINGS	
	E1B	LIGHT POLE - TYPE 1B - DECORATIVE PENDANT LIGHTING FIXTURE DOUBLE POLE MOUNTED- REFER TO ELEC DRAWINGS	
	E2A	LIGHT POLE -TYPE 2A- LED ACORN PEDESTRIAN LIGHT FIXTURE WITH CITY STANDARD BASE- REFER TO ELEC DRAWINGS	
		DRAINAGE AND UTILITIES	
	F3	BACKFLOW PREVENTER ENCLOSURE- REFER TO IRRIGATION DRAWINGS	
	F4	IRRIGATION CONTROLLER- REFER TO IRRIGATION DRAWINGS	

CONFORMED SET

HDR ENGINEERING, INC.
99 HIGH STREET, SUITE 2300
BOSTON, MASSACHUSETTS 02110-2378
(617) 357-7700

HALVORSON Tighe&Bond STUDIO
25 KINGSTON ST. BOSTON MA 02111-2200
(PHONE) 617.536.0380
WWW.HALVORSONDESIGN.COM

MASSACHUSETTS ROBERT URRIG REGISTERED LANDSCAPE ARCHITECT NO. 981
08/05/2022

Scale			
Date			
Job No.			
Designed by			
Drawn by	0	CONFORMED SET	8/5/2022
Checked by	No.	Description	Date
Approved by		REVISIONS	

THE WORKS — CAMBRIDGE DEPARTMENT OF PUBLIC WORKS

Client	CITY OF CAMBRIDGE, MA	Sheet L-1.08
Project	RIVER STREET INFRASTRUCTURE AND STREETSCAPE PROJECT	Total Sheets 381
Drawing	**STREETSCAPE MATERIALS AND STREET TREE PIT LAYOUT PLAN-8**	File No.

File: C:\PW\WORKING\EAST01\D1174456\7113XXX_LA(DESIGN)_L-1.00 MATERIALS AND LAYOUT PLAN.DWG Plotted: 8/11/2022 8:45:59 AM

File: C:\PWORKING\EAST01\D1174456\7113XXX_LA(DESIGN)_L-1.00 MATERIALS AND LAYOUT PLAN.DWG Plotted: 8/11/2022 8:46:24 AM

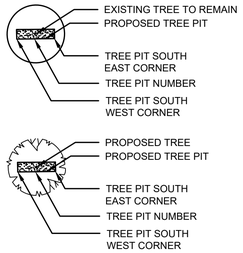

BLACKSTONE STREET TREE PIT LAYOUT LEGEND - WEST SIDE

TREE PIT #	NORTH-EAST CORNER (FROM)	SOUTH-EAST CORNER (TO)
W-12	65+73.04	65+83.04
W-13	66+11.79	66+21.79
W-14	66+34.08	66+44.08
W-15	66+64.87	66+74.87
W-16	66+88.54	66+98.54
W-17	67+26.33	67+36.33
W-18	67+45.96	67+55.96
W-19	67+64.42	67+74.42
W-20	67+84.04	67+94.04
W-21	68+14.54	68+24.54

BLACKSTONE STREET TREE PIT LAYOUT LEGEND - EAST SIDE

TREE PIT #	NORTH-WEST CORNER (FROM)	SOUTH-WEST CORNER (TO)
E-17	65+71.50	65+81.50
E-18	66+18.33	66+28.33
E-19	66+68.16	66+78.16
E-20	67+05.54	67+15.54
E-21	67+43.87	67+53.87
E-22	67+81.66	67+91.66

STREET TREE PIT LAYOUT NOTES:

CONTRACTOR TO LAYOUT STREET TREE PITS BASED ON ROADWAY ALIGNMENT CENTER LINE STATION POINTS

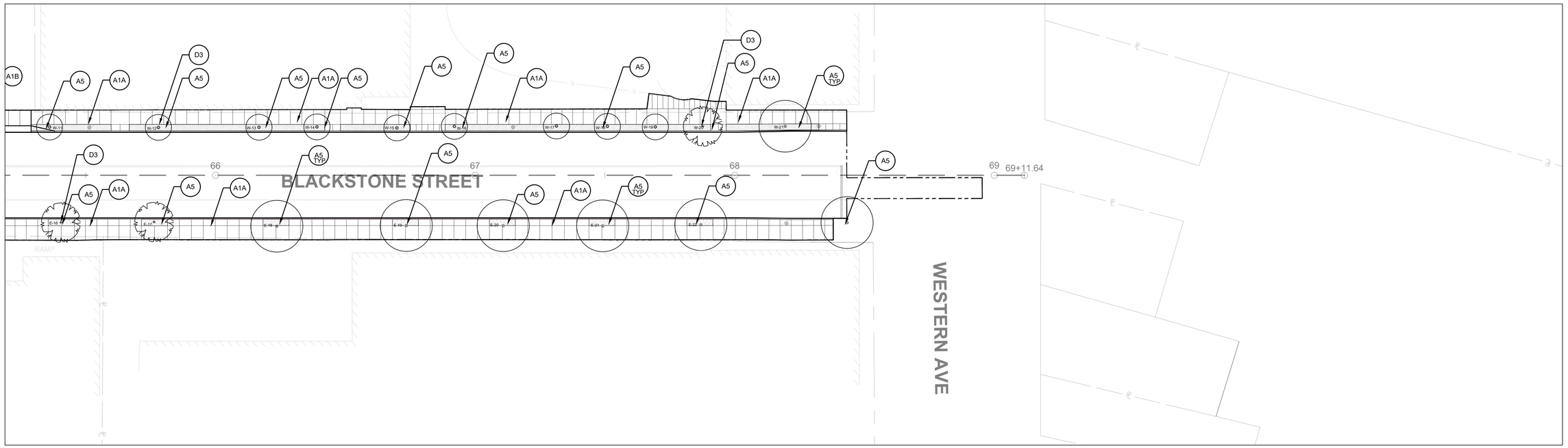

PLAN

0 20 50 100

SCALE: 1" = 20'

N

MATERIALS LEGEND

SYM	TAG	DESCRIPTION	DETAIL
		PAVING	
	A1	A. 4-INCH CEMENT CONCRETE SIDEWALKS: SEE CIVIL DRAWINGS FOR DETAILS B. 6-INCH CEMENT CONCRETE SIDEWALKS : SEE CIVIL DRAWINGS FOR DETAILS	1/L3.01
	A2	BRICK PAVING ON ASPHALT BASE	2/L3.01
	A2.1	BRICK PAVING - PERMEABLE	4/L3.01 3/L3.01
	A3	CYCLE TRACK- PERVIOUS OR NON-PERVIOUS - REFER TO CIVIL DRAWINGS FOR LOCATIONS AND DETAILS	
	A4	ACCESSIBLE CURB RAMP W/ DETECTABLE WARNING STRIP-REFER TO CIVIL DRAWINGS	
	A5	MULCH AT TREE PIT	6/L3.05

TAG	DESCRIPTION	DETAIL
A6	FLEXIBLE POROUS PAVING	5/L3.01
A10	GRANITE COBBLE PAVERS-TYPE 1	7/L3.01
A10.1	GRANITE COBBLE PAVERS -TYPE 2	7/L3.01
	CURBING AND WALLS	
B1.1	GRANITE PLANTER CURB - STREETSCAPE	8/L3.01
B2	STEEL EDGING- METAL EDGING AT TREE PITS	9/L3.01
B3.1	GRANITE SEATING STONE	7/L3.02 2/L3.02
B4.1	REFURBISHED GRANITE PLANTER WALL	
B4.2	RECONFIGURED GRANITE PLANTER WALL	4/L3.02 5/L3.02

TAG	DESCRIPTION	DETAIL
B5	REFURBISHED CONCRETE WALL - REFER TO CIVIL DRAWINGS	
B9	RELOCATED ALVIN THOMPSON MONUMENT	3/L3.02
B11	GRANITE BOLLARD- TO REMAIN	
B12	GRANITE BOLLARD- SALVAGE AND RELOCATE. BOLLARD IN PLANT BED, SET IN SOIL. BOLLARD IN PAVING, SET IN PAVING SUBASE	
	SITE FURNISHINGS	
C1.1	BIKE RACK - TYPE 1	1/L3.03
C2	METAL BENCH WITH BACK	2/L3.03
C2.1	RELOCATED BENCH - CONTRACTOR TO ENSURE BENCH WITH MEMORIAL PLAQUE IS RELOCATED	2/L3.03
C3	TRASH AND RECYCLING RECEPTACLE	3/L3.03

SYM	TAG	DESCRIPTION	DETAIL
	C4	RITSUKO TAHO ART PIECES- REFER TO CIVIL DRAWINGS FOR DETAILS	
	C17	MAIL BOX	
	C18	RODENT CONTROL GEOTEXTILE	1,2,3-L3.05 5,6-L3.05
		PLANTING	
	D1	PLANTING BED	2/L3.05 6/L3.05
	D1.1	SOD LAWN	1/L3.05
	D2	TREE PLANTING	5/L3.05
	D3	TREE PLANTING - IN OPEN TREE PIT	6/L3.05
	D4	TREE PLANTING - W/ FLEXIBLE POROUS PAVING	7/L3.05

SYM	TAG	DESCRIPTION	DETAIL
	D5	TREE PLANTING - IN RAISED PLANTER	6/L3.05
		LIGHTING - REFER TO ELECTRICAL AND STRUCTURAL DRAWINGS	
	E1A	LIGHT POLE - TYPE 1A - DECORATIVE PENDANT LIGHTING FIXTURE SINGLE POLE MOUNTED- REFER TO ELEC DRAWINGS	
	E1B	LIGHT POLE - TYPE 1B - DECORATIVE PENDANT LIGHTING FIXTURE DOUBLE POLE MOUNTED- REFER TO ELEC DRAWINGS	
	E2A	LIGHT POLE -TYPE 2A- LED ACORN PEDESTRIAN LIGHT FIXTURE WITH CITY STANDARD BASE- REFER TO ELEC DRAWINGS	
		DRAINAGE AND UTILITIES	
	F3	BACKFLOW PREVENTER ENCLOSURE- REFER TO IRRIGATION DRAWINGS	
	F4	IRRIGATION CONTROLLER- REFER TO IRRIGATION DRAWINGS	

CONFORMED SET

HDR ENGINEERING, INC.
99 HIGH STREET, SUITE 2300
BOSTON, MASSACHUSETTS 02110-2378
(617) 357-7700

HALVORSON Tighe&Bond STUDIO
25 KINGSTON ST, BOSTON MA 02111-2200
(PHONE) 617.536.0380
WWW.HALVORSONDESIGN.COM

MASSACHUSETTS ROBERT URLIG No. 981 REGISTERED LANDSCAPE ARCHITECT
08/05/2022

Scale			
Date			
Job No.			
Designed by			
Drawn by	0	CONFORMED SET	8/5/2022
Checked by	No.	Description	Date
Approved by		REVISIONS	

THE WORKS — CAMBRIDGE DEPARTMENT OF PUBLIC WORKS

Client	CITY OF CAMBRIDGE, MA	Sheet	L-1.09
Project	RIVER STREET INFRASTRUCTURE AND STREETSCAPE PROJECT	Total Sheets	381
Drawing	**STREETSCAPE MATERIALS AND STREET TREE PIT LAYOUT PLAN-9**	File No.	

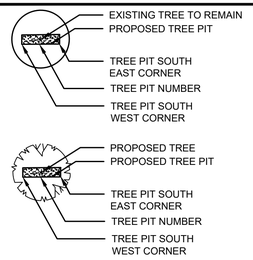

GREEN STREET TREE PIT LAYOUT LEGEND - WEST SIDE

TREE PIT #	SOUTH-WEST CORNER (FROM)	SOUTH-EAST CORNER (TO)
W-01	133+89.50	133+99.50
W-02	134+19.50	134+29.50
W-03	134+44.50	124+54.50
W-04	134+84.50	134+94.50
W-05	135+62.29	135+72.29
W-06	135+90.12	136+00.12
W-07	136+18.12	136+28.12
W-08	137+16.16	137+26.16

MAGAZINE STREET TREE PIT LAYOUT LEGEND - NORTH SIDE

TREE PIT #	SOUTH-WEST CORNER (FROM)	SOUTH-EAST CORNER (TO)
N-01	123+83.75	123+93.75
N-02	123+59.58	123+69.58
N-03	123+29.66	123+39.66

MAGAZINE STREET TREE PIT LAYOUT LEGEND - SOUTH SIDE

TREE PIT #	SOUTH-WEST CORNER (FROM)	SOUTH-EAST CORNER (TO)
S-01	123+96.83	124+06.83
S-02	123+72.46	123+82.46
S-03	123+51.00	123+61.00
S-04	123+30.75	123.40.75

STREET TREE PIT LAYOUT NOTES:

CONTRACTOR TO LAYOUT STREET TREE PITS BASED ON ROADWAY ALIGNMENT CENTER LINE STATION POINTS

SEE SHEET L-1.07

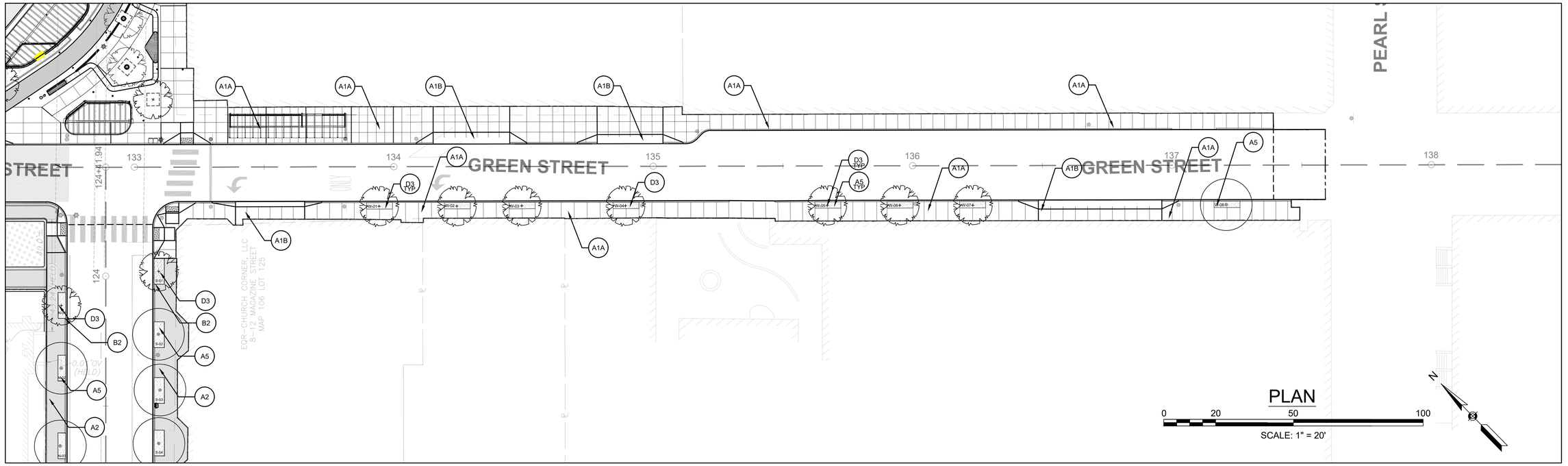

MATERIALS LEGEND

SYM	TAG	DESCRIPTION	DETAIL
		PAVING	
	A1	A. 4-INCH CEMENT CONCRETE SIDEWALKS: SEE CIVIL DRAWINGS FOR DETAILS B. 6-INCH CEMENT CONCRETE SIDEWALKS : SEE CIVIL DRAWINGS FOR DETAILS	1/L3.01
	A2	BRICK PAVING ON ASPHALT BASE	2/L3.01
	A2.1	BRICK PAVING - PERMEABLE	4/L3.01 9/L3.01
	A3	CYCLE TRACK- PERVIOUS OR NON-PERVIOUS - REFER TO CIVIL DRAWINGS FOR LOCATIONS AND DETAILS	
	A4	ACCESSIBLE CURB RAMP W/ DETECTABLE WARNING STRIP-REFER TO CIVIL DRAWINGS	
	A5	MULCH AT TREE PIT	6/L3.05

TAG	DESCRIPTION	DETAIL
A6	FLEXIBLE POROUS PAVING	5/L3.01
A10	GRANITE COBBLE PAVERS-TYPE 1	7/L3.01
A10.1	GRANITE COBBLE PAVERS -TYPE 2	7/L3.01
	CURBING AND WALLS	
B1.1	GRANITE PLANTER CURB - STREETSCAPE	8/L3.01
B2	STEEL EDGING- METAL EDGING AT TREE PITS	6/L3.01
B3.1	GRANITE SEATING STONE	1/L3.02 2/L3.02
B4.1	REFURBISHED GRANITE PLANTER WALL	
B4.2	RECONFIGURED GRANITE PLANTER WALL	4/L3.02 5/L3.02

TAG	DESCRIPTION	DETAIL
B5	REFURBISHED CONCRETE WALL - REFER TO CIVIL DRAWINGS	
B9	RELOCATED ALVIN THOMPSON MONUMENT	3/L3.02
B11	GRANITE BOLLARD- TO REMAIN	
B12	GRANITE BOLLARD- SALVAGE AND RELOCATE. BOLLARD IN PLANT BED, SET IN SOIL. BOLLARD IN PAVING, SET IN PAVING SUBASE	
	SITE FURNISHINGS	
C1.1	BIKE RACK - TYPE 1	1/L3.03
C2	METAL BENCH WITH BACK	2/L3.03
C2.1	RELOCATED BENCH - CONTRACTOR TO ENSURE BENCH WITH MEMORIAL PLAQUE IS RELOCATED	2/L3.03
C3	TRASH AND RECYCLING RECEPTACLE	3/L3.03

SYM	TAG	DESCRIPTION	DETAIL
	C4	RITSUKO TAHO ART PIECES- REFER TO CIVIL DRAWINGS FOR DETAILS	
	C17	MAIL BOX	
	C18	RODENT CONTROL GEOTEXTILE	1,2,3-L3.05 5,8-L3.05
		PLANTING	
	D1	PLANTING BED	2/L3.05 9/L3.05
	D1.1	SOD LAWN	1/L3.05
	D2	TREE PLANTING	5/L3.05
	D3	TREE PLANTING - IN OPEN TREE PIT	6/L3.05
	D4	TREE PLANTING - W/ FLEXIBLE POROUS PAVING	7/L3.05

SYM	TAG	DESCRIPTION	DETAIL
	D5	TREE PLANTING - IN RAISED PLANTER	9/L3.05
		LIGHTING - REFER TO ELECTRICAL AND STRUCTURAL DRAWINGS	
	E1A	LIGHT POLE - TYPE 1A - DECORATIVE PENDANT LIGHTING FIXTURE SINGLE POLE MOUNTED- REFER TO ELEC DRAWINGS	
	E1B	LIGHT POLE - TYPE 1B - DECORATIVE PENDANT LIGHTING FIXTURE DOUBLE POLE MOUNTED- REFER TO ELEC DRAWINGS	
	E2A	LIGHT POLE -TYPE 2A- LED ACORN PEDESTRIAN LIGHT FIXTURE WITH CITY STANDARD BASE- REFER TO ELEC DRAWINGS	
		DRAINAGE AND UTILITIES	
	F3	BACKFLOW PREVENTER ENCLOSURE- REFER TO IRRIGATION DRAWINGS	
	F4	IRRIGATION CONTROLLER- REFER TO IRRIGATION DRAWINGS	

CONFORMED SET

HDR ENGINEERING, INC.
99 HIGH STREET, SUITE 2300
BOSTON, MASSACHUSETTS 02110-2378
(617) 357-7700

HALVORSON Tighe&Bond STUDIO
25 KINGSTON ST, BOSTON MA 02111-2200
(PHONE) 617.536.0380
WWW.HALVORSONDESIGN.COM

MASSACHUSETTS ROBERT URLIG No. 981 REGISTERED LANDSCAPE ARCHITECT
08/05/2022

Scale			
Date			
Job No.			
Designed by			
Drawn by	0	CONFORMED SET	8/5/2022
Checked by	No.	Description	Date
Approved by		REVISIONS	

THE WORKS CAMBRIDGE DEPARTMENT OF PUBLIC WORKS

Client	CITY OF CAMBRIDGE, MA	Sheet	L-1.10
Project	RIVER STREET INFRASTRUCTURE AND STREETSCAPE PROJECT	Total Sheets	381
Drawing	**STREETSCAPE MATERIALS AND STREET TREE PIT LAYOUT PLAN-10**	File No.	

File: C:\PWWORKING\EAST\01D1174456\7113XXX_LA(DESIGN)_L-1.00 MATERIALS AND LAYOUT PLAN.DWG Plotted: 8/11/2022 8:46:49 AM

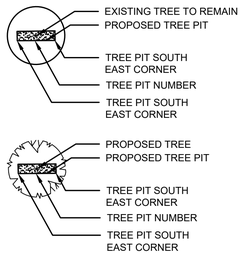

MAGAZINE STREET TREE PIT LAYOUT LEGEND - NORTH SIDE

TREE PIT #	SOUTH-WEST CORNER (FROM)	SOUTH-EAST CORNER (TO)
N-04	122+96.79	123.04.79
N-05	122+68.04	122+68.04
N-06	122+39.79	122+49.79

MAGAZINE STREET TREE PIT LAYOUT LEGEND - SOUTH SIDE

TREE PIT #	SOUTH-WEST CORNER (FROM)	SOUTH-EAST CORNER (TO)
S-05	123+03.83	123+13.83
S-06	122+78.79	122+88.79
S-07	122+52.16	122+62.16
S-08	122+32.75	122+42.75

STREET TREE PIT LAYOUT NOTES:

CONTRACTOR TO LAYOUT STREET TREE PITS BASED ON ROADWAY ALIGNMENT CENTER LINE STATION POINTS

SEE SHEET L-1.10

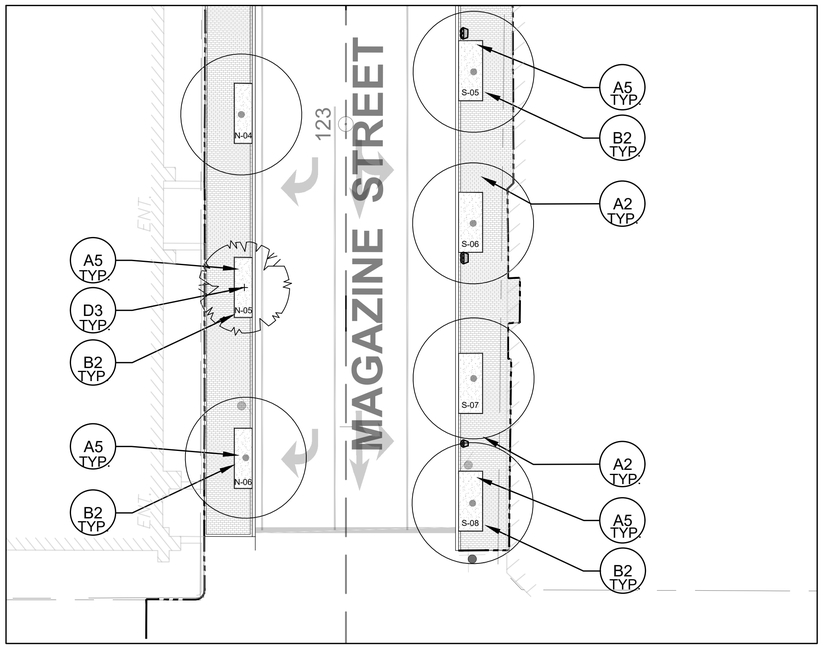

PLAN

0 20 50 100

SCALE: 1" = 20'

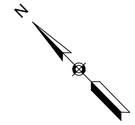

MATERIALS LEGEND

SYM	TAG	DESCRIPTION	DETAIL
		PAVING	
	A1	A. 4-INCH CEMENT CONCRETE SIDEWALKS: SEE CIVIL DRAWINGS FOR DETAILS B. 6-INCH CEMENT CONCRETE SIDEWALKS : SEE CIVIL DRAWINGS FOR DETAILS	1/L3.01
	A2	BRICK PAVING ON ASPHALT BASE	2/L3.01
	A2.1	BRICK PAVING - PERMEABLE	4/L3.01 3/L3.01
	A3	CYCLE TRACK- PERVIOUS OR NON-PERVIOUS - REFER TO CIVIL DRAWINGS FOR LOCATIONS AND DETAILS	
	A4	ACCESSIBLE CURB RAMP W/ DETECTABLE WARNING STRIP-REFER TO CIVIL DRAWINGS	
	A5	MULCH AT TREE PIT	5/L3.05

TAG	DESCRIPTION	DETAIL
A6	FLEXIBLE POROUS PAVING	5/L3.01
A10	GRANITE COBBLE PAVERS-TYPE 1	7/L3.01
A10.1	GRANITE COBBLE PAVERS -TYPE 2	7/L3.01
	CURBING AND WALLS	
B1.1	GRANITE PLANTER CURB - STREETSCAPE	8/L3.01
B2	STEEL EDGING- METAL EDGING AT TREE PITS	6/L3.01
B3.1	GRANITE SEATING STONE	1/L3.02 2/L3.02
B4.1	REFURBISHED GRANITE PLANTER WALL	
B4.2	RECONFIGURED GRANITE PLANTER WALL	4/L3.02 5/L3.02

TAG	DESCRIPTION	DETAIL
B5	REFURBISHED CONCRETE WALL - REFER TO CIVIL DRAWINGS	
B9	RELOCATED ALVIN THOMPSON MONUMENT	9/L3.02
B11	GRANITE BOLLARD- TO REMAIN	
B12	GRANITE BOLLARD- SALVAGE AND RELOCATE. BOLLARD IN PLANT BED, SET IN SOIL. BOLLARD IN PAVING, SET IN PAVING SUBASE	
	SITE FURNISHINGS	
C1.1	BIKE RACK - TYPE 1	1/L3.03
C2	METAL BENCH WITH BACK	2/L3.03
C2.1	RELOCATED BENCH - CONTRACTOR TO ENSURE BENCH WITH MEMORIAL PLAQUE IS RELOCATED	2/L3.03
C3	TRASH AND RECYCLING RECEPTACLE	3/L3.03

SYM	TAG	DESCRIPTION	DETAIL
	C4	RITSUKO TAHO ART PIECES- REFER TO CIVIL DRAWINGS FOR DETAILS	
	C17	MAIL BOX	
	C18	RODENT CONTROL GEOTEXTILE	1,2,3-L3.05 5,8-L3.05
		PLANTING	
	D1	PLANTING BED	2/L3.05 5/L3.05
	D1.1	SOD LAWN	1/L3.05
	D2	TREE PLANTING	5/L3.05
	D3	TREE PLANTING - IN OPEN TREE PIT	5/L3.05
	D4	TREE PLANTING - W/ FLEXIBLE POROUS PAVING	7/L3.05

SYM	TAG	DESCRIPTION	DETAIL
	D5	TREE PLANTING - IN RAISED PLANTER	6/L3.05
		LIGHTING - REFER TO ELECTRICAL AND STRUCTURAL DRAWINGS	
	E1A	LIGHT POLE - TYPE 1A - DECORATIVE PENDANT LIGHTING FIXTURE SINGLE POLE MOUNTED- REFER TO ELEC DRAWINGS	
	E1B	LIGHT POLE - TYPE 1B - DECORATIVE PENDANT LIGHTING FIXTURE DOUBLE POLE MOUNTED- REFER TO ELEC DRAWINGS	
	E2A	LIGHT POLE -TYPE 2A- LED ACORN PEDESTRIAN LIGHT FIXTURE WITH CITY STANDARD BASE- REFER TO ELEC DRAWINGS	
		DRAINAGE AND UTILITIES	
	F3	BACKFLOW PREVENTER ENCLOSURE- REFER TO IRRIGATION DRAWINGS	
	F4	IRRIGATION CONTROLLER- REFER TO IRRIGATION DRAWINGS	

CONFORMED SET

HDR ENGINEERING, INC.
99 HIGH STREET, SUITE 2300
BOSTON, MASSACHUSETTS 02110–2378
(617) 357–7700

HALVORSON Tighe&Bond STUDIO
25 KINGSTON ST, BOSTON MA 02111-2200
(PHONE) 617.536.0380
WWW.HALVORSONDESIGN.COM

MASSACHUSETTS ROBERT UHLIG No. 981 REGISTERED LANDSCAPE ARCHITECT
08/05/2022

Scale			
Date			
Job No.			
Designed by			
Drawn by	0	CONFORMED SET	8/5/2022
Checked by	No.	Description	Date
Approved by	REVISIONS		

CAMBRIDGE DEPARTMENT OF PUBLIC WORKS

Client	CITY OF CAMBRIDGE, MA	Sheet	L-1.11
Project	RIVER STREET INFRASTRUCTURE AND STREETSCAPE PROJECT	Total Sheets	381
Drawing	**STREETSCAPE MATERIALS AND STREET TREE PIT LAYOUT PLAN-11**	File No.	

File: C:\PWWORKING\EAST\01D1174456\7113XXX_LA(DESIGN)_L-1.00 MATERIALS AND LAYOUT PLAN.DWG Plotted: 8/11/2022 8:47:15 AM

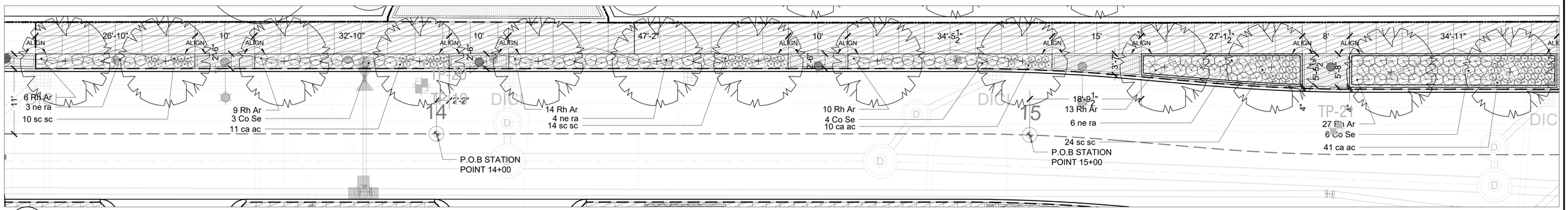

1 PLANTER ENLARGEMENT & LAYOUT PLAN

SCALE 1/8"=1'-0"

PLANT SCHEDULE

Symbol	Quantity	Botanical Name	Common Name	Size	Spacing
STREET TREES					
AC FR	11	*Acer Freemanii 'Jeffersred'*	Autumn Blaze Maple	2-2.5" caliper, B&B	
GI BI	22	*Ginko biloba 'Autumn Gold'*	Autumn Gold Ginko	2-2.5" caliper, B&B	
GL TR S	16	*Gleditsia triacanthos inermis 'Shademaster'*	Shademaster Honey Locust	2-2.5" caliper, B&B	
LI ST	10	*Liquidambar styraciflua 'Happidaze'*	Happidaze Sweet Gum	2-2.5" caliper, B&B	
NY SY	8	*Nyssa Sylvatica*	Black Tupelo	2-2.5" caliper, B&B	
PL AC L	3	*Platanus acerifolia*	London Planetree	5-5.5 caliper, B&B	
QU BI	11	*Quercus bicolor*	Swamp White Oak	2-2.5" caliper, B&B	
QU PA S	17	*Quercus palustris*	Pin Oak	2-2.5"caliper, B&B	
QU RU	17	*Quercus rubra*	Northern Red Oak	2-2.5" caliper, B&B	
TI CO	7	*Tilia cordata*	Littleleaf Liden	2-2.5" caliper, B&B	
ZE SE	2	*Zelkova serrata*	Japanese Zelkova	2-2.5" caliper, B&B	
UL AM	21	*Ulmus americana' Princeton'*	American Elm	2-2.5" caliper, B&B	
FLOWERING TREES					
PR DR	2	*Prunus ' Dream Catcher'*	Dream Catcher Cherry	5-5.5" caliper, B&B,	
PR SU	2	*Prunus subhirtella 'Autumnalis'*	Autumnalis Higan Cherry	5-5.5" caliper, B&B,	
SHRUBS					
Co Se	43	*Cornus sericea 'Artic Fire'*	Artic Fire Dogwood	24-30" ht	30" O.C
Rh Ar	497	*Rhus aromatica 'Gro-Low'*	Gro-Low Fragrant Sumac	24-30" ht	30" O.C
GROUNDCOVER AND PERENNIALS					
al ps	1656	*Allium 'Purple Sensation'*	Purple Sensation Allium	bulbs	18" O.C.
ca ac	195	*Calamagrostis acutiflora 'Karl Foerster'*	Foerster's Feather Reed Grass	1 gal	24" O.C.
ne ra	57	*Nepeta racemosa 'Walkers Low'*	Walkers Low Catmint	2 gal	30" O.C.
sc sc	354	*Schizachyrium scoparium*	Little Bluestem	1 gal	18" O.C.
na mh	2340	*Narcissus' Mount Hood'*	Mount Hood daffodil	bulbs	18" O.C.

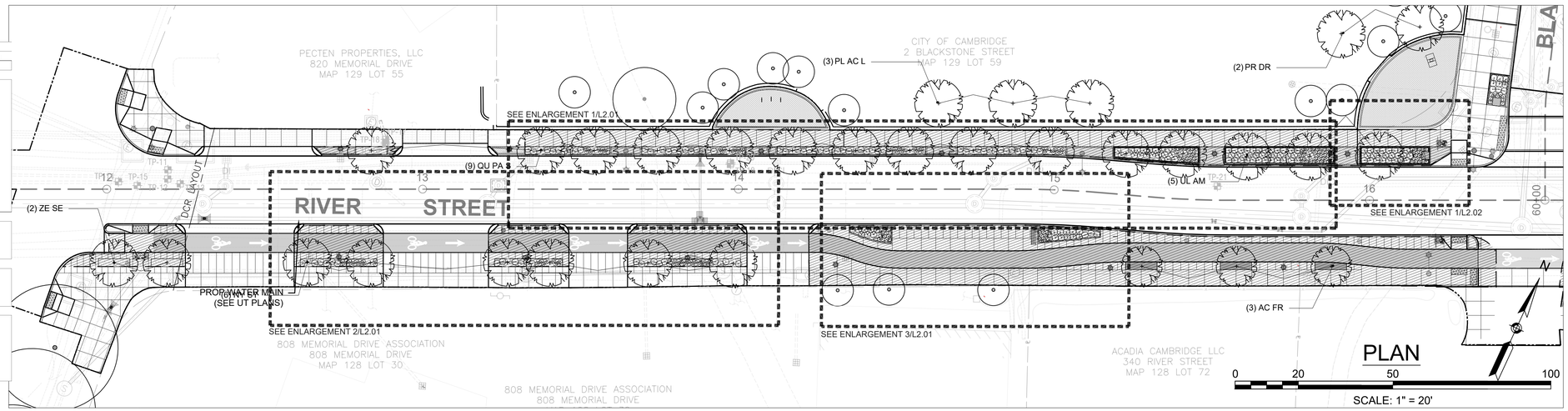

SEE SHEET L-2.02

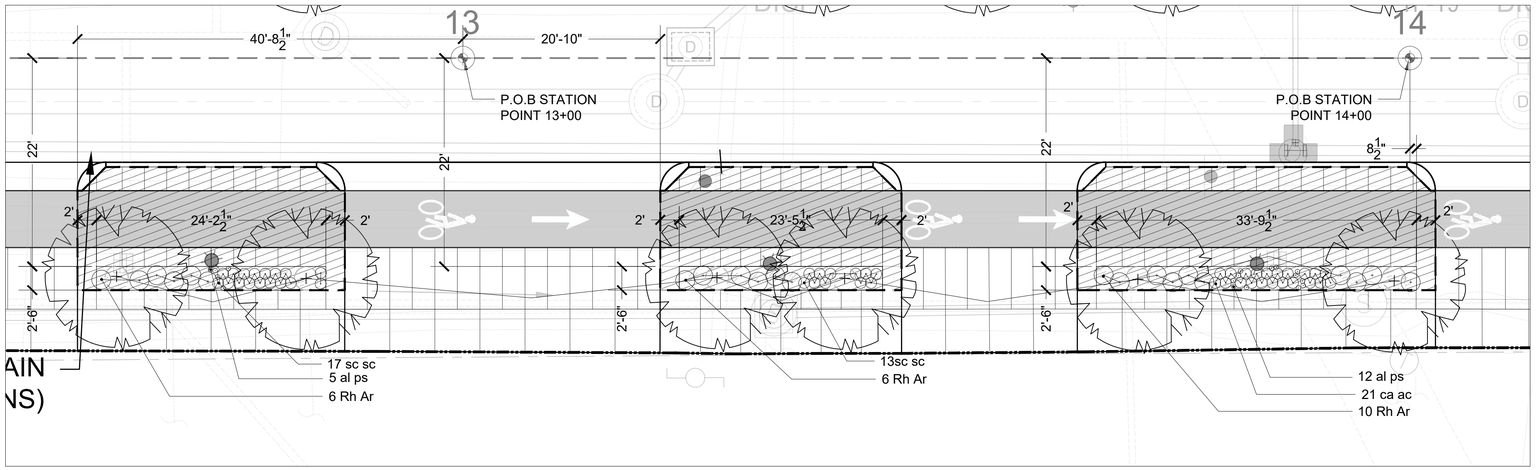

2 PLANTER ENLARGEMENT & LAYOUT PLAN

SCALE 1/8"=1'-0"

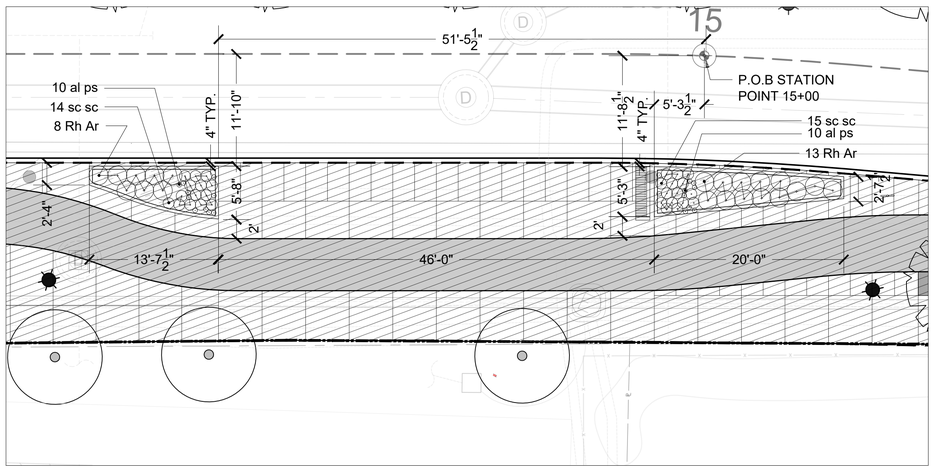

3 PLANTER ENLARGEMENT & LAYOUT PLAN

SCALE 1/8"=1'-0"

ISSUED FOR BID

HDR ENGINEERING, INC.
99 HIGH STREET, SUITE 2300
BOSTON, MASSACHUSETTS 02110-2378
(617) 357-7700

HALVORSON Tighe&Bond STUDIO
25 KINGSTON ST. BOSTON MA 02111-2200
(PHONE) 617.536.0380
WWW.HALVORSONDESIGN.COM

MASSACHUSETTS ROBERT URLIG No. 981 REGISTERED LANDSCAPE ARCHITECT
04/18/2022

Scale			
Date			
Job No.			
Designed by			
Drawn by			
Checked by	No.	Description	Date
Approved by	REVISIONS		

THE WORKS — CAMBRIDGE DEPARTMENT OF PUBLIC WORKS

Client	CITY OF CAMBRIDGE, MA	Sheet L-2.01
Project	RIVER STREET INFRASTRUCTURE AND STREETSCAPE PROJECT	Total Sheets 381
Drawing	**STREETSCAPE PLANTING AND PLANTER LAYOUT PLAN-1**	File No.

File: C:\PW\WORKING\EAST01\D1174456\7113XXX_LA(DESIGN)_L-2.00 PLANTING AND PLANTER LAYOUT.DWG Plotted: 4/14/2022 10:50:20 AM

PLANTING NOTES

1. LANDSCAPE ARCHITECT TO APPROVE PLANT MATERIAL AT THE NURSERY AND AGAIN AT SITE PRIOR TO PLANTING.
2. PLANT MATERIAL SHALL CONFORM TO "THE AMERICAN STANDARD FOR NURSERY STOCK", PUBLISHED BY AMERICANHORT (WWW.AMERICANHORT.ORG).
3. NO SUBSTITUTIONS OF PLANT SPECIES WITHOUT LANDSCAPE ARCHITECT'S WRITTEN APPROVAL.
4. LOCATE AND VERIFY UTILITY LINE LOCATIONS PRIOR TO STAKING AND REPORT CONFLICT TO LANDSCAPE ARCHITECT.
5. PLANTING DEMOLITION DEBRIS, GARBAGE, LUMPS OF CONCRETE, STEEL AND OTHER MATERIALS DELETERIOUS TO PLANT'S HEALTH AS DETERMINED BY LANDSCAPE ARCHITECT SHALL BE REMOVED FROM ALL PLANTING AREAS.
6. NO PLANTING TO BE INSTALLED BEFORE ACCEPTANCE OF ROUGH GRADING.
7. PROPOSED TREE LOCATIONS SHALL BE STAKED OR LAID OUT IN THEIR APPROXIMATE LOCATION BY THE CONTRACTOR. ADJUST THE LOCATIONS AS REQUESTED BY THE LANDSCAPE ARCHITECT TO ACCOUNT FOR SUBSURFACE UTILITIES AND OTHER FIELD CONDITIONS. FINAL LOCATIONS OF PLANTS MUST BE APPROVED BY THE LANDSCAPE ARCHITECT PRIOR TO PLANTING.
8. TOTAL QUANTITY OF PLANTS FOR EACH AREA TO BE AVAILABLE ON SITE AT THE TIME OF PLANTING FOR FIELD LAYOUT BY ENGINEER. NO PARTIAL LAYOUT AND PLANTING OF AREAS WILL BE ACCEPTABLE.
9. INSTALL PLANTS WITH ROOT FLARES FLUSH WITH FINISHED GRADE OR TOP OF STRUCTURAL SOIL. IMMEDIATELY REPLANT PLANTS THAT SETTLE OUT OF PLUMB OR BELOW FINISHED GRADE.
10. PLANT UNDER FULL TIME SUPERVISION OF CERTIFIED ARBORIST, NURSERYMAN, OR LICENSED LANDSCAPE ARCHITECT. PROVIDE WRITTEN VERIFICATION OF CERTIFICATION AND/OR LICENSE FOR LANDSCAPE ARCHITECT'S APPROVAL.
11. LOOSE OR CRACKED ROOT BALLS ARE UNACCEPTABLE.
12. DO NOT USE TREE WRAP.
13. REMOVE TOP 2/3 OF WIRE BASKETS. REMOVE TOP 1/3 OF BURLAP. SYNTHETIC BURLAP WILL NOT BE ACCEPTED. FOR CONTAINER PLANTS, REMOVE CONTAINER AND SCARIFY EDGES OF ROOT BALL 1/2" DEEP IN A MINIMUM OF FOUR LOCATIONS.
14. WATER PLANTS THOROUGHLY AFTER INSTALLATION, A MINIMUM OF TWICE WITHIN THE FIRST 24 HOURS.
15. RAISE AND REPLANT PLANTS THAT SETTLE AFTER PLANTING AND WATERING.

PLANTER LAYOUT PLAN NOTES

1. PRIOR TO THE START OF ANY WORK THE CONTRACTOR SHALL MEET WITH THE OWNER AND LANDSCAPE ARCHITECT TO REVIEW THE PROJECT SCOPE.
2. REPAIR DAMAGE DUE TO CONSTRUCTION OPERATIONS INSIDE AND OUTSIDE OF THE PROPERTY LINE.
3. VERIFY ALL DIMENSIONS AND EXISTING UTILITY LOCATIONS PRIOR TO EXCAVATION. REPORT ANY DISCREPANCIES IN WRITING TO THE LANDSCAPE ARCHITECT AND RECEIVE WRITTEN INSTRUCTIONS PRIOR TO PROCEEDING.
4. ANY ALTERATIONS TO THESE DRAWINGS MADE IN THE FIELD DURING CONSTRUCTION SHALL BE PROMPTLY REPORTED TO AND APPROVED BY THE LANDSCAPE ARCHITECT AND RECORDED ON REPRODUCIBLE AS-BUILT DRAWINGS BY THE CONTRACTOR.
5. LINES ARE PARALLEL OR PERPENDICULAR TO LINES FROM WHICH THEY ARE MEASURED UNLESS OTHERWISE NOTED.
6. DIMENSIONS ARE TO JOINT CENTERLINE, WALL FACE, CURB FACE, PAVEMENT EDGE, CENTERLINE OF IMPROVEMENT OR AS OTHERWISE NOTED.
7. STAKE PROPOSED LANDSCAPE CURBS, AND SITE IMPROVEMENT LOCATIONS AND ELEVATIONS FOR THE ENGINEER'S APPROVAL PRIOR TO INSTALLATION.
8. ENSURE PAVING PITCHES HAVE POSITIVE DRAINAGE AND WILL NOT POCKET WATER. NOTIFY ENGINEER BEFORE PLACING PAVEMENT WITH A PITCH GREATER THAN 4.8% OR LESS THAN 0.75%, OR HAS A CROSS SLOPE OF GREATER THAN 1.8%. RECEIVE WRITTEN INSTRUCTIONS PRIOR TO PROCEEDING.
9. PROPOSED GRANITE SEATING, TREE AND PLANTING LOCATIONS ARE APPROXIMATE AND SHALL BE CONFIRMED IN THE FIELD WITH THE LANDSCAPE ARCHITECT PRIOR TO INSTALLATION.

PLANTING LEGEND

SYM	TAG	DESCRIPTION	QTY
		EXISTING STREET TREE TO REMAIN	
		PROPOSED STREET TREES	
		HATCH AREA SHOWS LIMIT OF STRUCTURAL SOIL AREA	
		LIMIT OF WORK	

SEE SHEET 2.08

SEE SHEET L-2.01

SEE SHEET L-2.03

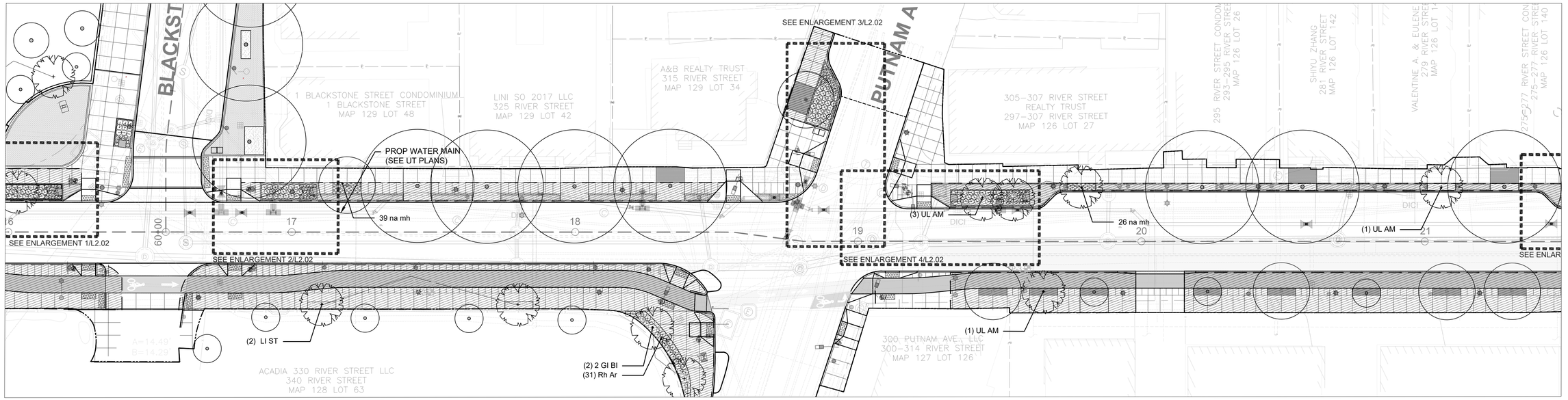

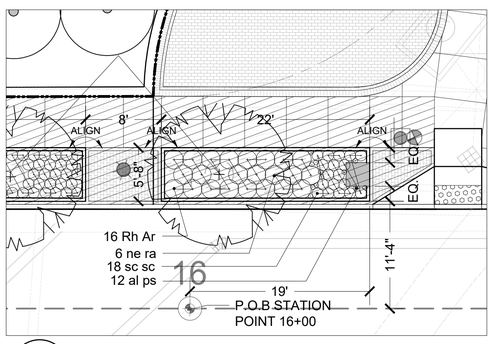

1 **PLANTER ENLARGEMENT & LAYOUT PLAN**

SCALE 1/8"=1'-0"

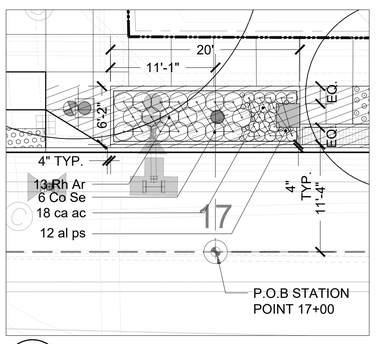

2 **PLANTER ENLARGEMENT & LAYOUT PLAN**

SCALE 1/8"=1'-0"

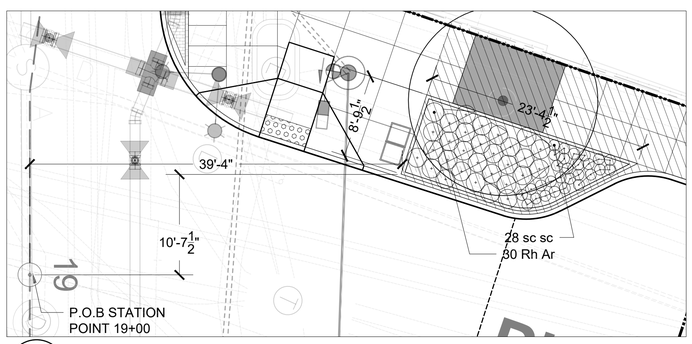

3 **PLANTER ENLARGEMENT & LAYOUT PLAN**

SCALE 1/8"=1'-0"

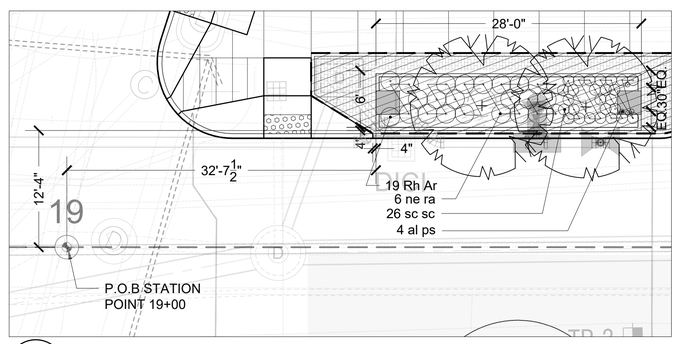

4 **PLANTER ENLARGEMENT & LAYOUT PLAN**

SCALE 1/8"=1'-0"

N

PLAN

0 20 50 100

SCALE: 1" = 20'

ISSUED FOR BID

HDR ENGINEERING, INC.
99 HIGH STREET, SUITE 2300
BOSTON, MASSACHUSETTS 02110-2378
(617) 357-7700

HALVORSON Tighe&Bond STUDIO
25 KINGSTON ST, BOSTON MA 02111-2200
(PHONE) 617.536.0380
WWW.HALVORSONDESIGN.COM

MASSACHUSETTS ROBERT URLIG No. 981 REGISTERED LANDSCAPE ARCHITECT 04/18/2022

Scale			
Date			
Job No.			
Designed by			
Drawn by			
Checked by	No.	Description	Date
Approved by	REVISIONS		

THE WORKS — CAMBRIDGE DEPARTMENT OF PUBLIC WORKS

Client	CITY OF CAMBRIDGE, MA	Sheet	L-2.02
Project	RIVER STREET INFRASTRUCTURE AND STREETSCAPE PROJECT	Total Sheets	381
Drawing	**STREETSCAPE PLANTING AND PLANTER LAYOUT PLAN-2**	File No.	

File: C:\PW\WORKING\EAST\01\D1174456\7113XXX_LA(DESIGN)_L-2.00 PLANTING AND PLANTER LAYOUT.DWG Plotted: 4/14/2022 10:51:38 AM

SEE SHEET L-2.02

SEE SHEET 2.04

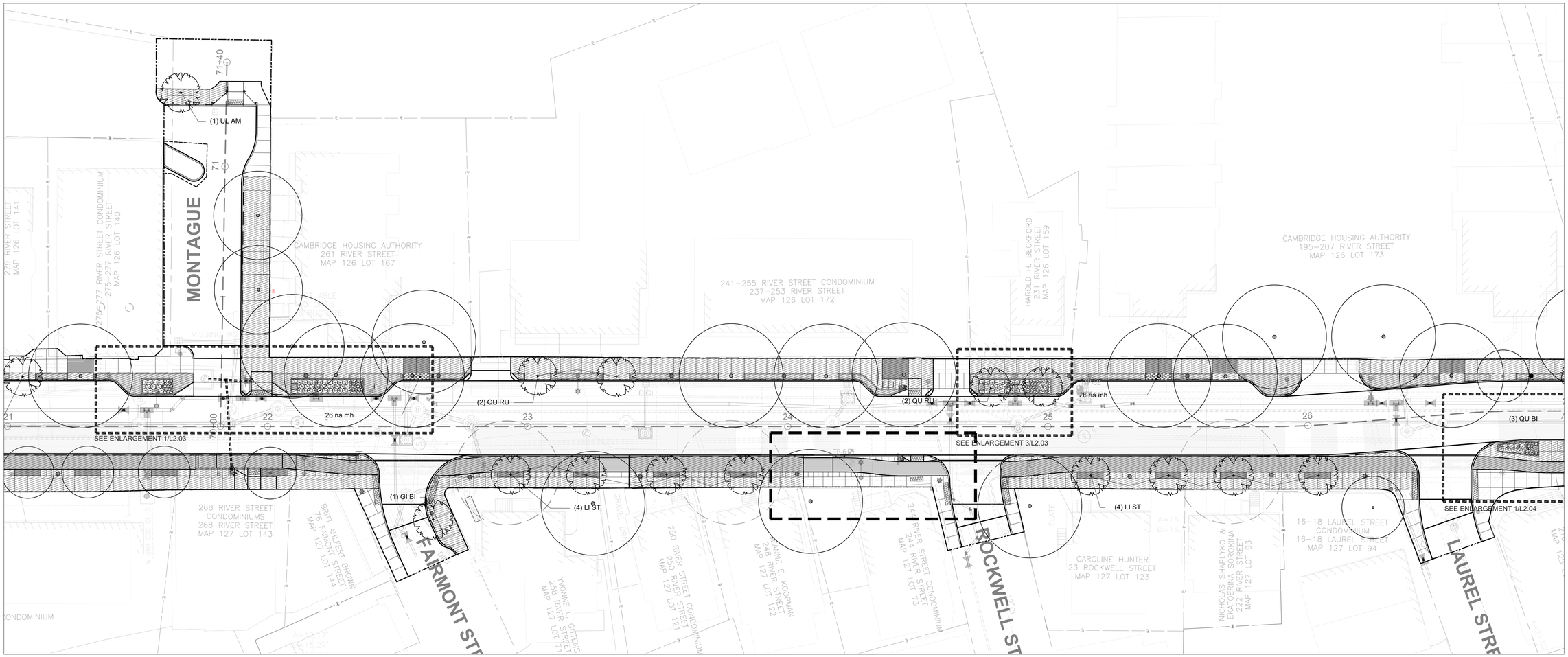

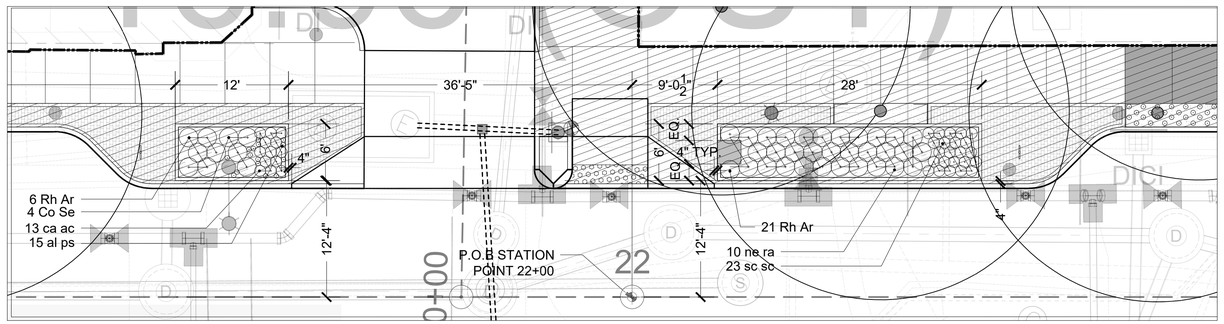

1 **PLANTER NO. 16 ENLARGEMENT & LAYOUT PLAN**

SCALE 1/8"=1'-0"

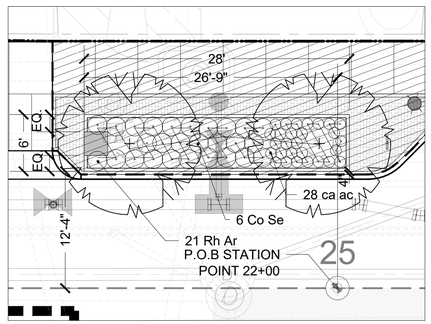

2 **PLANTER ENLARGEMENT & LAYOUT PLAN**

SCALE 1/8"=1'-0"

PLANTING LEGEND

SYM	TAG	DESCRIPTION	QTY
		EXISTING STREET TREE TO REMAIN	
		PROPOSED STREET TREES	
		HATCH AREA SHOWS LIMIT OF STRUCTURAL SOIL AREA	
		LIMIT OF WORK	

PLAN

0 20 50 100

SCALE: 1" = 20'

ISSUED FOR BID

HDR ENGINEERING, INC.
99 HIGH STREET, SUITE 2300
BOSTON, MASSACHUSETTS 02110–2378
(617) 357–7700

HALVORSON Tighe&Bond STUDIO
25 KINGSTON ST, BOSTON MA 02111-2200
(PHONE) 617.536.0380
WWW.HALVORSONDESIGN.COM

MASSACHUSETTS ROBERT URLEB No. 981 REGISTERED LANDSCAPE ARCHITECT
04/18/2022

Scale			
Date			
Job No.			
Designed by			
Drawn by			
Checked by	No.	Description	Date
Approved by	REVISIONS		

THE WORKS — CAMBRIDGE DEPARTMENT OF PUBLIC WORKS

Client: CITY OF CAMBRIDGE, MA	Sheet: L-2.03
Project: RIVER STREET INFRASTRUCTURE AND STREETSCAPE PROJECT	Total Sheets: 381
Drawing: **STREETSCAPE PLANTING AND PLANTER LAYOUT PLAN-3**	File No.

File: C:\PWWORKING\EAST01\D1174456\7113XXX_LA(DESIGN)_L-2.00 PLANTING AND PLANTER LAYOUT.DWG Plotted: 4/14/2022 10:52:27 AM

SEE SHEET L-2.03

SEE SHEET L-2.05

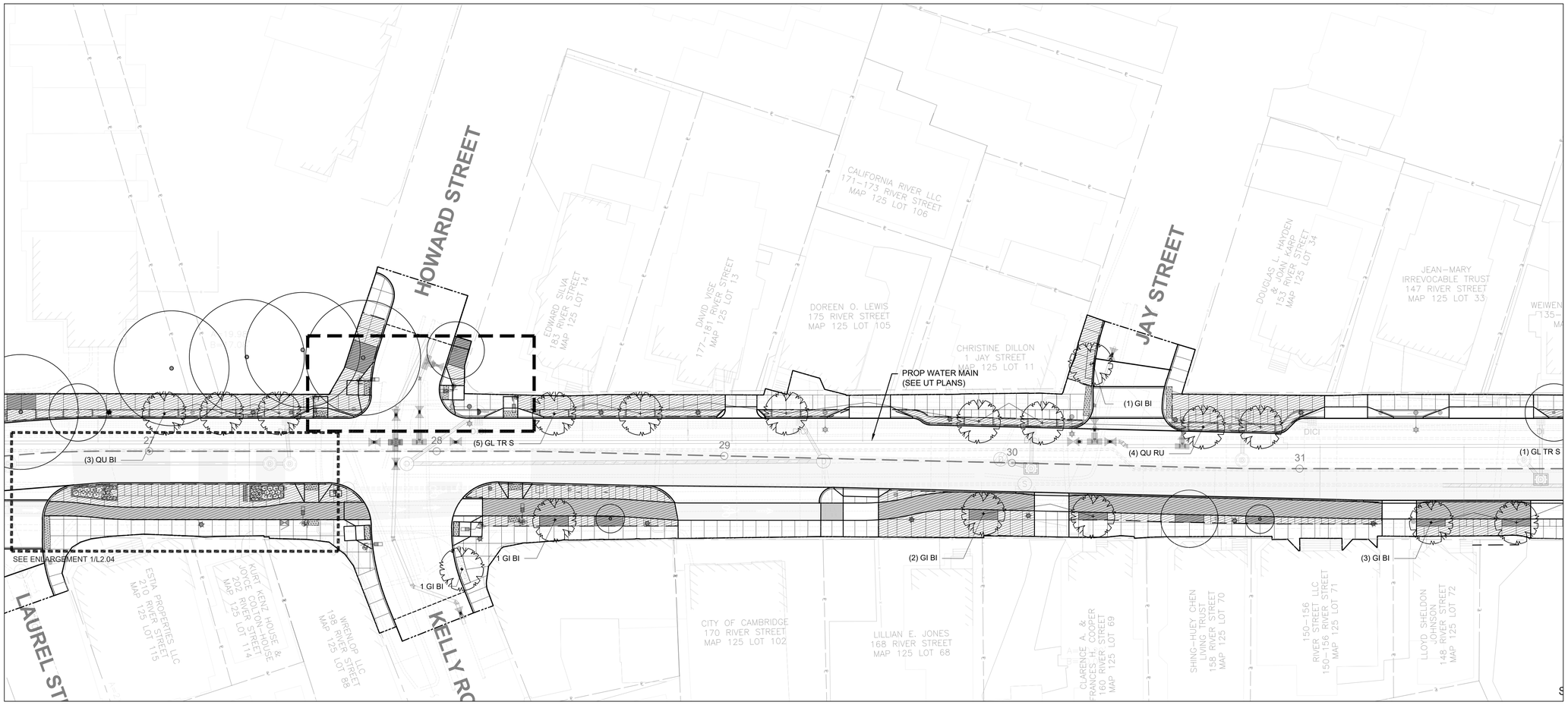

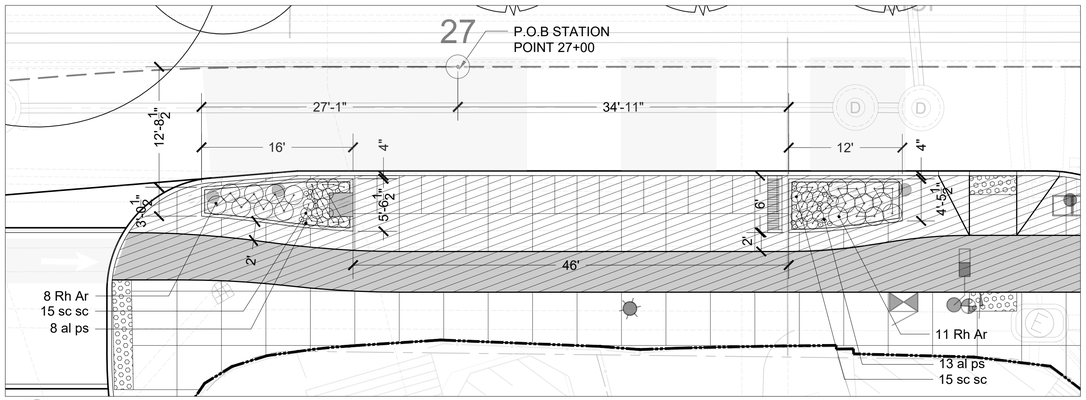

1 **PLANTER ENLARGEMENT & LAYOUT PLAN**

SCALE 1/8"=1'-0"

PLANTING LEGEND

SYM	TAG	DESCRIPTION	QTY
		EXISTING STREET TREE TO REMAIN	
		PROPOSED STREET TREES	
		HATCH AREA SHOWS LIMIT OF STRUCTURAL SOIL AREA	
		LIMIT OF WORK	

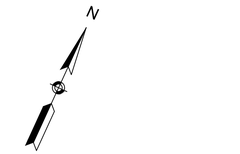

PLAN

0 20 50 100

SCALE: 1" = 20'

ISSUED FOR BID

HDR ENGINEERING, INC.
99 HIGH STREET, SUITE 2300
BOSTON, MASSACHUSETTS 02110–2378
(617) 357–7700

HALVORSON
Tighe&Bond STUDIO
25 KINGSTON ST, BOSTON MA 02111-2200
(PHONE) 617.536.0380
WWW.HALVORSONDESIGN.COM

MASSACHUSETTS
ROBERT URLIG
No. 981
REGISTERED LANDSCAPE ARCHITECT
04/18/2022

Scale			
Date			
Job No.			
Designed by			
Drawn by			
Checked by	No.	Description	Date
Approved by		REVISIONS	

THE WORKS
CAMBRIDGE DEPARTMENT OF PUBLIC WORKS

Client	CITY OF CAMBRIDGE, MA	Sheet L-2.04
Project	RIVER STREET INFRASTRUCTURE AND STREETSCAPE PROJECT	Total Sheets 381
Drawing	**STREETSCAPE PLANTING AND PLANTER LAYOUT PLAN-4**	File No.

File: C:\PWWORKING\EAST01\D1174456\7113XXX_LA(DESIGN)_L-2.00 PLANTING AND PLANTER LAYOUT.DWG Plotted: 4/14/2022 10:52:48 AM

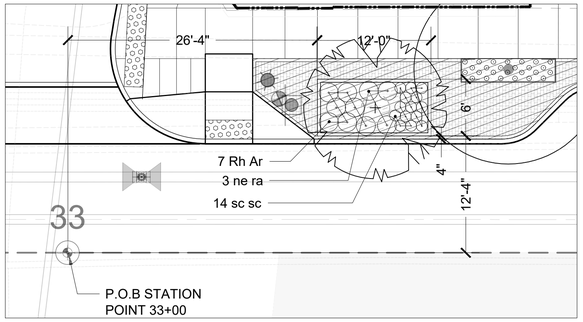

1 **PLANTER ENLARGEMENT & LAYOUT PLAN**

SCALE 1/8"=1'-0"

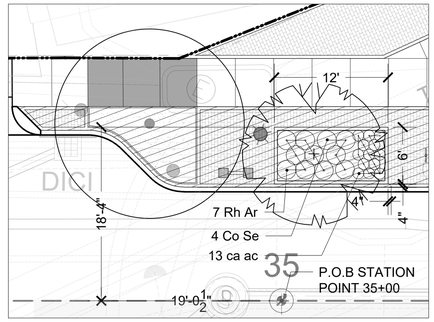

2 **PLANTER ENLARGEMENT & LAYOUT PLAN**

SCALE 1/8"=1'-0"

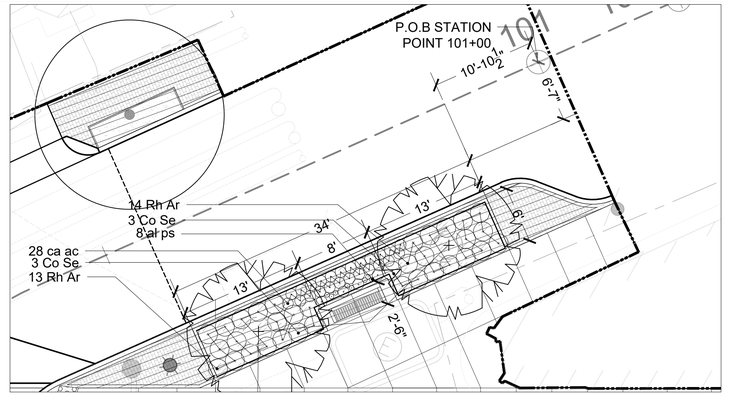

3 **PLANTER ENLARGEMENT & LAYOUT PLAN**

SCALE 1/8"=1'-0"

SEE SHEET L-2.04

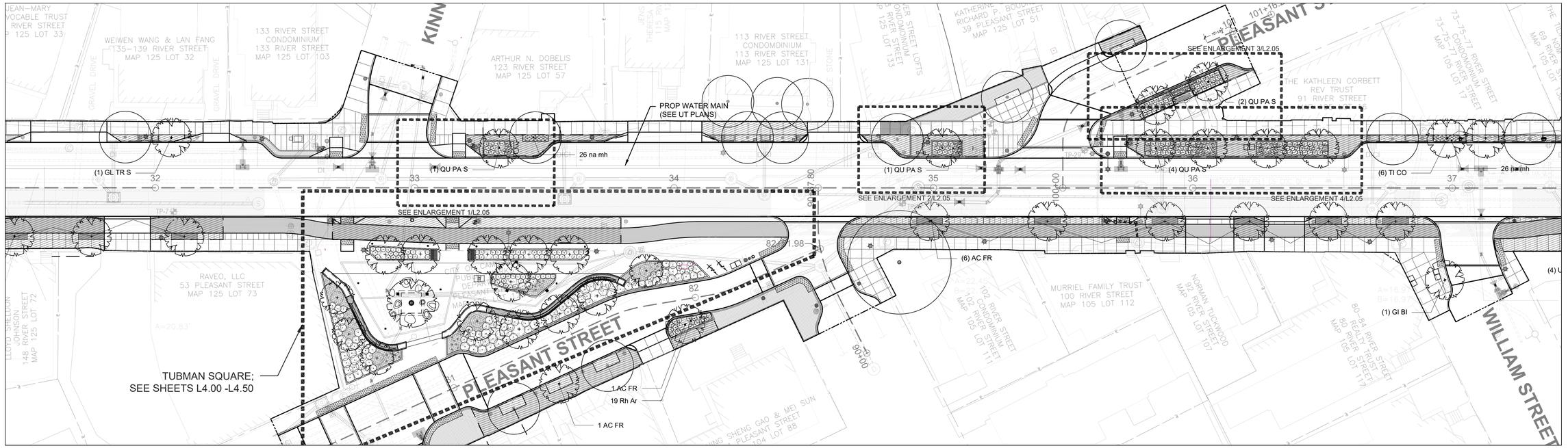

SEE SHEET L-2.06

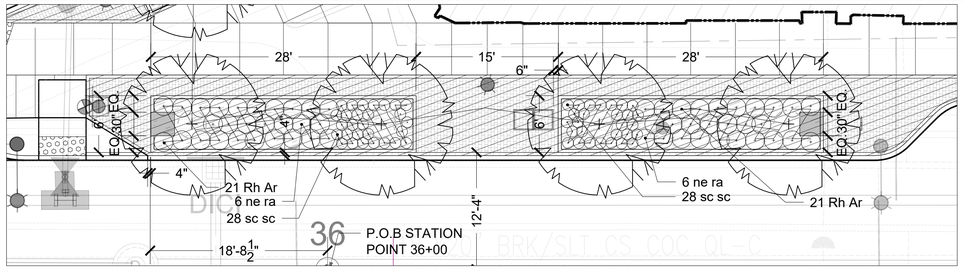

4 **PLANTER ENLARGEMENT & LAYOUT PLAN**

SCALE 1/8"=1'-0"

PLANTING LEGEND

SYM	TAG	DESCRIPTION	QTY
		EXISTING STREET TREE TO REMAIN	
		PROPOSED STREET TREES	
		HATCH AREA SHOWS LIMIT OF STRUCTURAL SOIL AREA	
		LIMIT OF WORK	

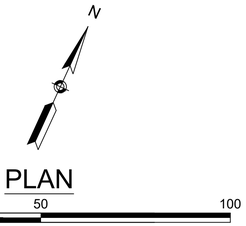

ISSUED FOR BID

HDR ENGINEERING, INC.
99 HIGH STREET, SUITE 2300
BOSTON, MASSACHUSETTS 02110–2378
(617) 357–7700

HALVORSON Tighe&Bond STUDIO
25 KINGSTON ST, BOSTON MA 02111-2200
(PHONE) 617.536.0380
WWW.HALVORSONDESIGN.COM

MASSACHUSETTS ROBERT URIG No. 981 REGISTERED LANDSCAPE ARCHITECT
04/18/2022

Scale			
Date			
Job No.			
Designed by			
Drawn by			
Checked by	No.	Description	Date
Approved by	REVISIONS		

THE WORKS — CAMBRIDGE DEPARTMENT OF PUBLIC WORKS

Client	CITY OF CAMBRIDGE, MA	Sheet	L-2.05
Project	RIVER STREET INFRASTRUCTURE AND STREETSCAPE PROJECT	Total Sheets	381
Drawing	**STREETSCAPE PLANTING AND PLANTER LAYOUT PLAN-5**	File No.	

File: C:\PW\WORKING\EAST01\D1174456\7113XXX_LA(DESIGN)_L-2.00 PLANTING AND PLANTER LAYOUT.DWG Plotted: 4/15/2022 5:21:38 PM

SEE SHEET L-2.05

SEE SHEET L-2.07

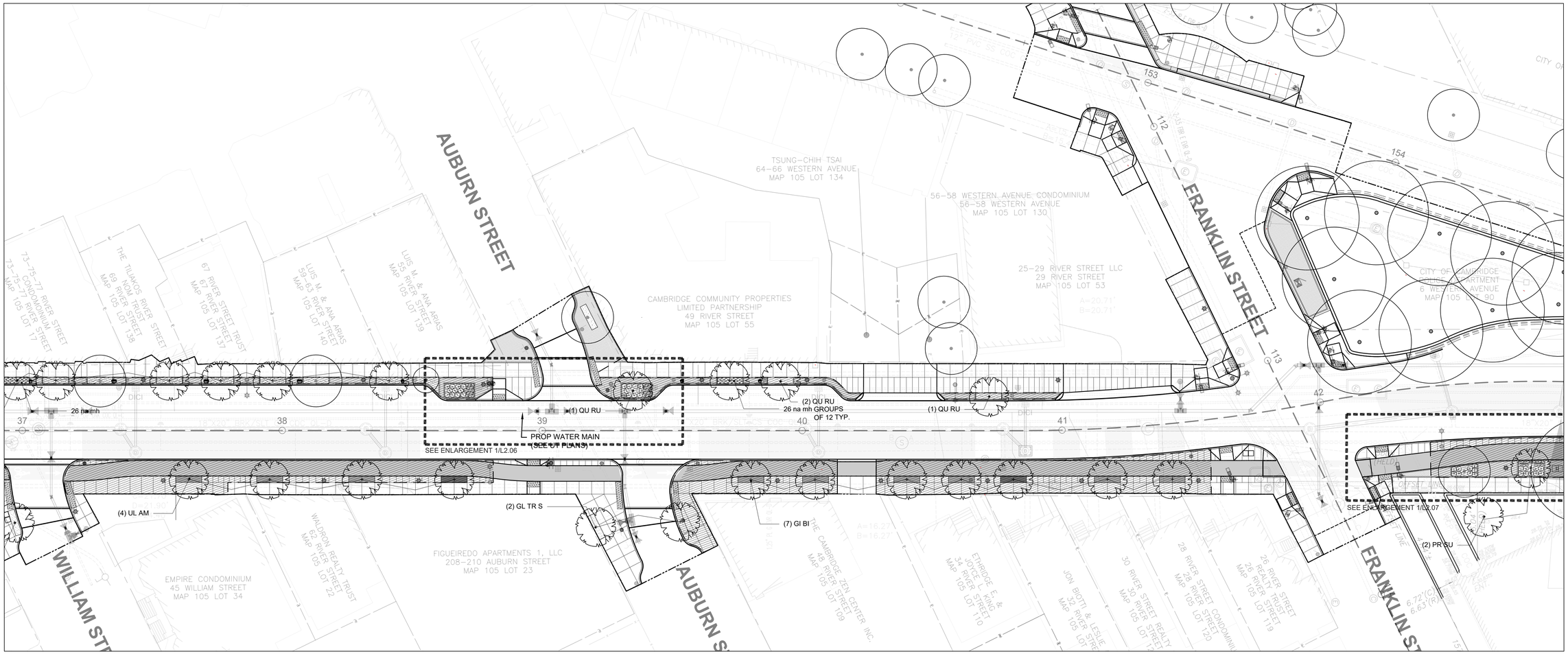

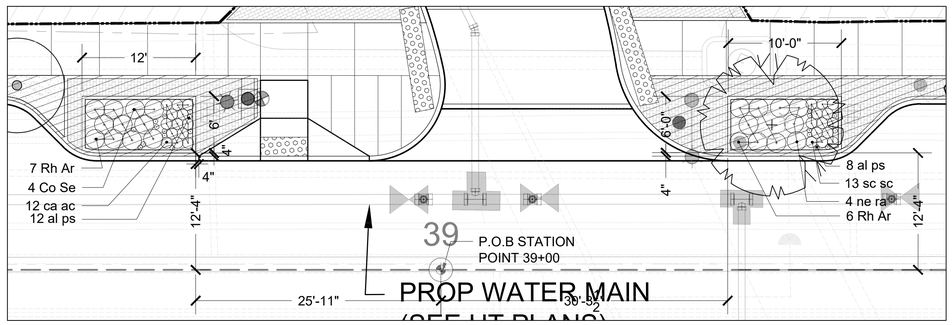

1 **PLANTER ENLARGEMENT & LAYOUT PLAN**

SCALE 1/8"=1'-0"

PLANTING LEGEND

SYM	TAG	DESCRIPTION	QTY
		EXISTING STREET TREE TO REMAIN	
		PROPOSED STREET TREES	
		HATCH AREA SHOWS LIMIT OF STRUCTURAL SOIL AREA	
		LIMIT OF WORK	

PLAN

0 20 50 100

SCALE: 1" = 20'

ISSUED FOR BID

HDR ENGINEERING, INC.
99 HIGH STREET, SUITE 2300
BOSTON, MASSACHUSETTS 02110-2378
(617) 357-7700

HALVORSON Tighe&Bond STUDIO
25 KINGSTON ST, BOSTON MA 02111-2200
(PHONE) 617.536.0380
WWW.HALVORSONDESIGN.COM

MASSACHUSETTS ROBERT UHLIG No. 981 REGISTERED LANDSCAPE ARCHITECT
05/02/2022

Scale			
Date			
Job No.			
Designed by			
Drawn by			
Checked by	No.	Description	Date
Approved by	REVISIONS		

THE WORKS CAMBRIDGE DEPARTMENT OF PUBLIC

Client	CITY OF CAMBRIDGE, MA	Sheet	L-2.06
Project	RIVER STREET INFRASTRUCTURE AND STREETSCAPE PROJECT	Total Sheets	381
Drawing	**STREETSCAPE PLANTING AND PLANTER LAYOUT PLAN-6**	File No.	

File: C:\PWWORKINGIEAST01\ID1117445\7113XXX_LA(DESIGN)_L-2.00 PLANTING AND PLANTER LAYOUT.DWG Plotted: 5/2/2022 9:04:55 AM

SEE SHEET L-2.06

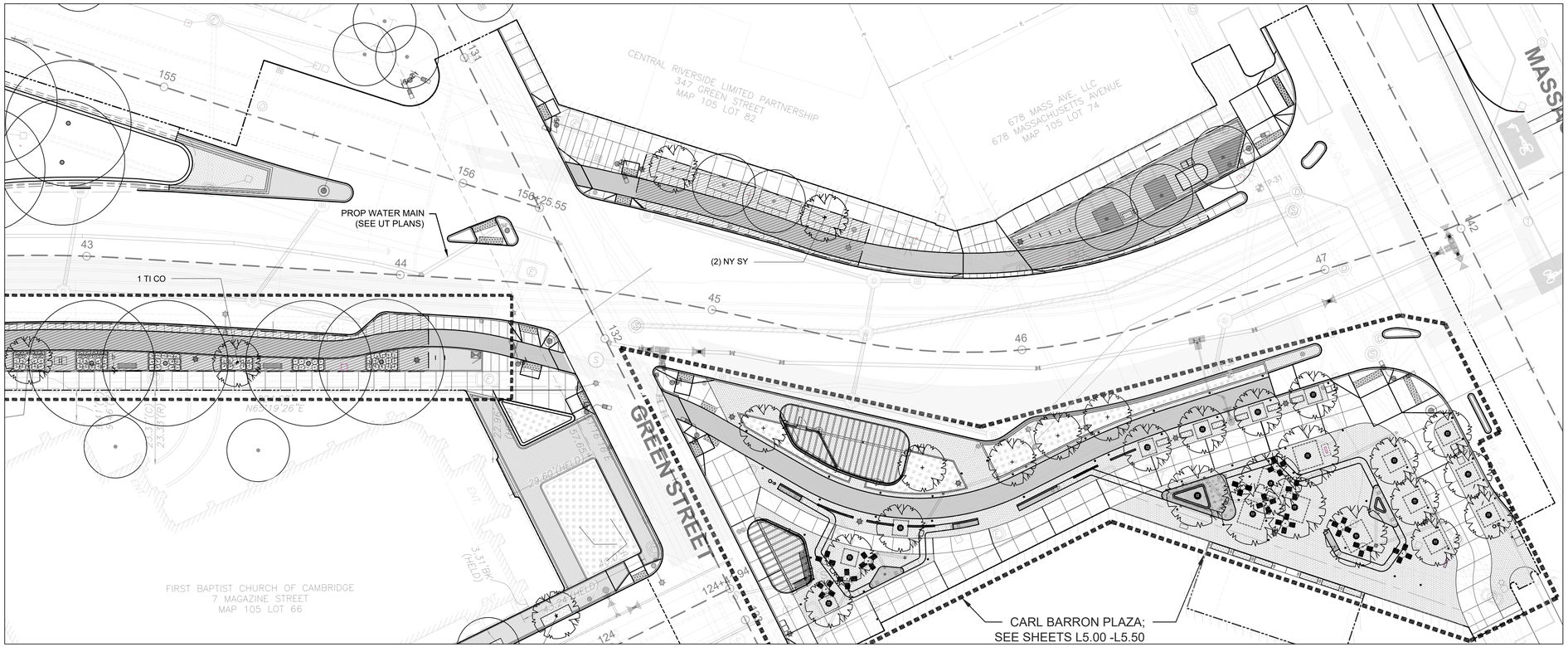

SEE SHEET L-2.10

PLANTING LEGEND

SYM	TAG	DESCRIPTION	QTY
		EXISTING STREET TREE TO REMAIN	
		PROPOSED STREET TREES	
		HATCH AREA SHOWS LIMIT OF STRUCTURAL SOIL AREA	
		LIMIT OF WORK	

N

PLAN

0 20 50 100

SCALE: 1" = 20'

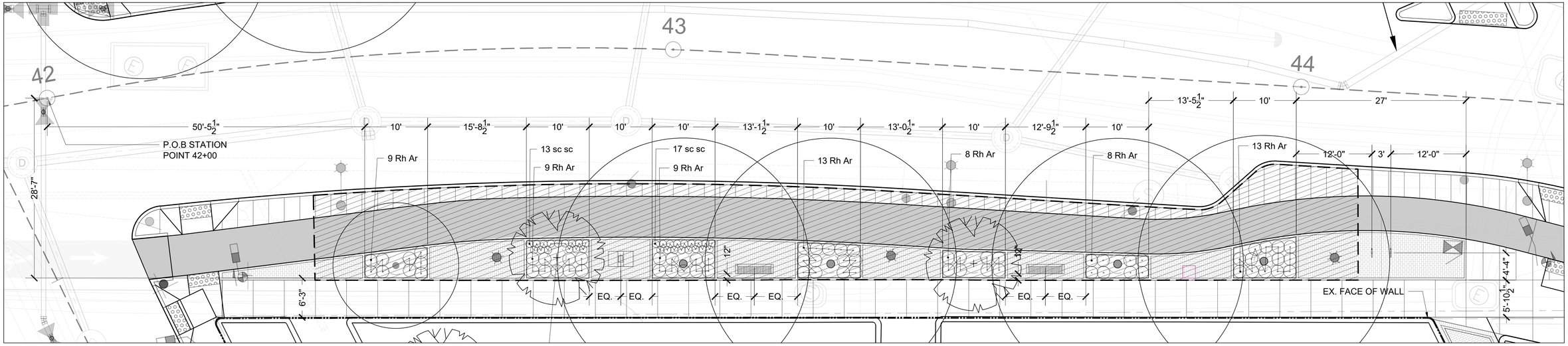

ISSUED FOR BID

HDR ENGINEERING, INC.
99 HIGH STREET, SUITE 2300
BOSTON, MASSACHUSETTS 02110–2378
(617) 357–7700

HALVORSON Tighe&Bond STUDIO
25 KINGSTON ST, BOSTON MA 02111-2200
(PHONE) 617.536.0380
WWW.HALVORSONDESIGN.COM

MASSACHUSETTS ROBERT URLIB No. 981 REGISTERED LANDSCAPE ARCHITECT
04/18/2022

Scale			
Date			
Job No.			
Designed by			
Drawn by			
Checked by	No.	Description	Date
Approved by	REVISIONS		

CAMBRIDGE DEPARTMENT OF PUBLIC THE WORKS

Client	CITY OF CAMBRIDGE, MA	Sheet	L-2.07
Project	RIVER STREET INFRASTRUCTURE AND STREETSCAPE PROJECT	Total Sheets	381
Drawing	**STREETSCAPE PLANTING AND PLANTER LAYOUT PLAN-7**	File No.	

File: C:\PW\WORKING\EAST01\D1174456\7113XXX_LA(DESIGN)_L-2.00 PLANTING AND PLANTER
LAYOUT.DWG Plotted: 4/15/2022 5:27:02 PM

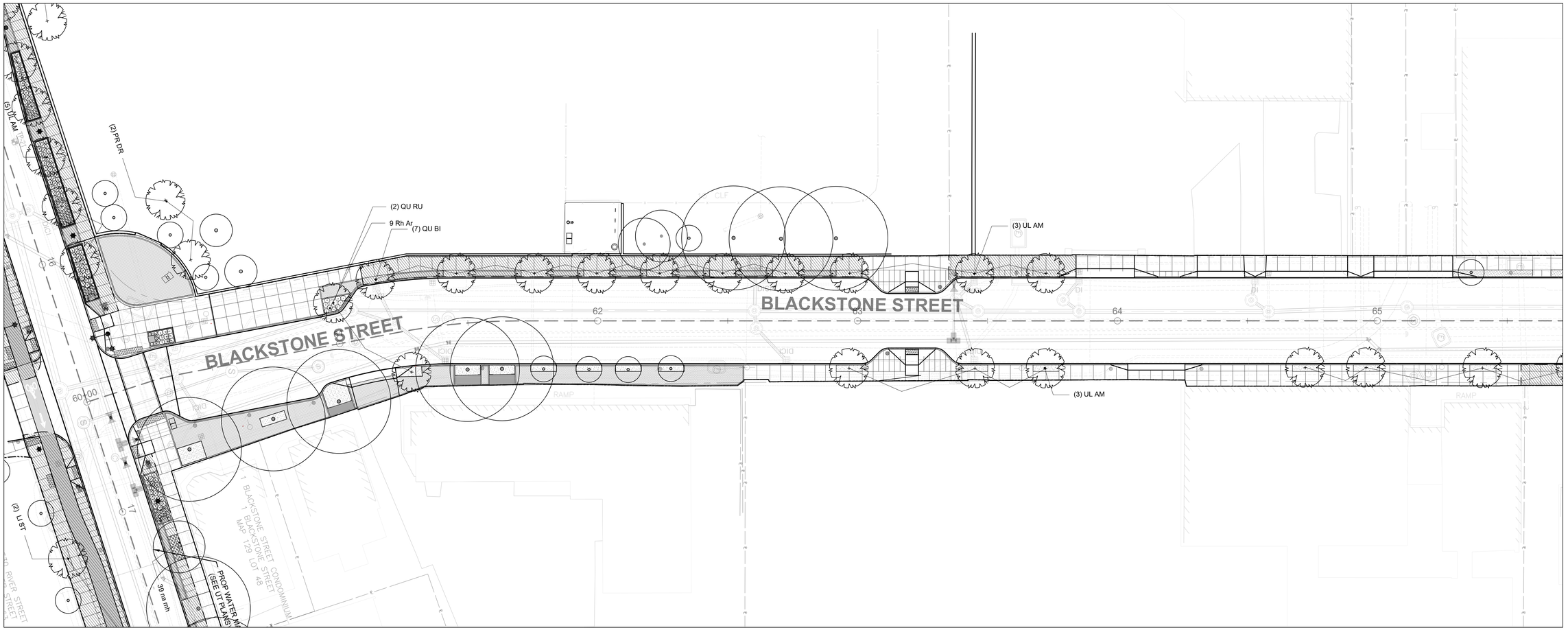

PLANTING LEGEND

SYM	TAG	DESCRIPTION	QTY
		EXISTING STREET TREE TO REMAIN	
		PROPOSED STREET TREES	
		HATCH AREA SHOWS LIMIT OF STRUCTURAL SOIL AREA	
		LIMIT OF WORK	

N

PLAN

0 20 50 100

SCALE: 1" = 20'

ISSUED FOR BID

HDR ENGINEERING, INC.
99 HIGH STREET, SUITE 2300
BOSTON, MASSACHUSETTS 02110–2378
(617) 357–7700

HALVORSON Tighe&Bond STUDIO
25 KINGSTON ST, BOSTON MA 02111-2200
(PHONE) 617.536.0380
WWW.HALVORSONDESIGN.COM

MASSACHUSETTS ROBERT URLIG No. 981 REGISTERED LANDSCAPE ARCHITECT
04/18/2022

Scale			
Date			
Job No.			
Designed by			
Drawn by			
Checked by	No.	Description	Date
Approved by	REVISIONS		

THE WORKS — CAMBRIDGE DEPARTMENT OF PUBLIC WORKS

Client	CITY OF CAMBRIDGE, MA	Sheet	L-2.08
Project	RIVER STREET INFRASTRUCTURE AND STREETSCAPE PROJECT	Total Sheets	381
Drawing	**STREETSCAPE PLANTING AND PLANTER LAYOUT PLAN-8**	File No.	

File: C:\PWWORKING\EAST01\D1174456\7113XXX_LA(DESIGN)_L-2.00 PLANTING AND PLANTER LAYOUT.DWG Plotted: 4/14/2022 10:56:04 AM

SEE SHEET L-2.08

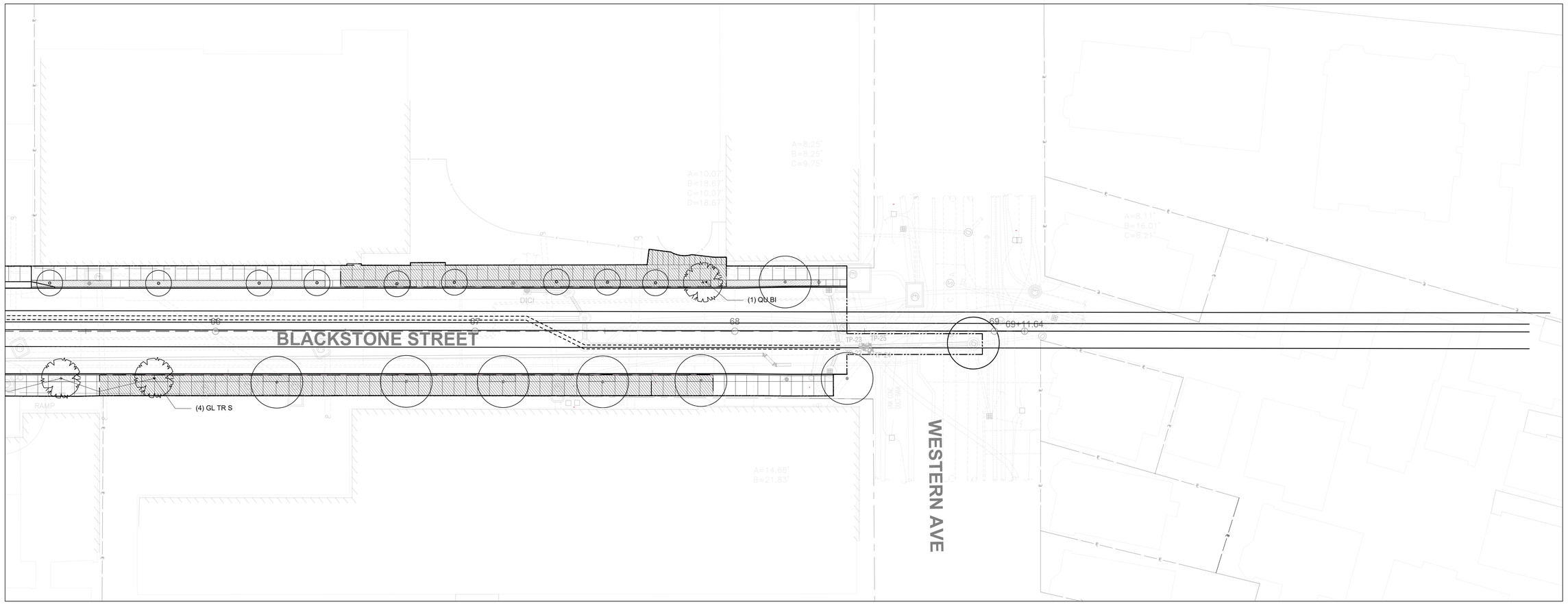

PLANTING LEGEND

SYM	TAG	DESCRIPTION	QTY
		EXISTING STREET TREE TO REMAIN	
		PROPOSED STREET TREES	
		HATCH AREA SHOWS LIMIT OF STRUCTURAL SOIL AREA	
		LIMIT OF WORK	

N

PLAN

0 20 50 100

SCALE: 1" = 20'

ISSUED FOR BID

HDR ENGINEERING, INC.
99 HIGH STREET, SUITE 2300
BOSTON, MASSACHUSETTS 02110-2378
(617) 357-7700

HALVORSON Tighe&Bond STUDIO
25 KINGSTON ST, BOSTON MA 02111-2200
(PHONE) 617.536.0380
WWW.HALVORSONDESIGN.COM

MASSACHUSETTS ROBERT URLIB No. 981 REGISTERED LANDSCAPE ARCHITECT
04/18/2022

Scale			
Date			
Job No.			
Designed by			
Drawn by			
Checked by	No.	Description	Date
Approved by	REVISIONS		

THE WORKS — CAMBRIDGE DEPARTMENT OF PUBLIC

Client	CITY OF CAMBRIDGE, MA	Sheet	L-2.09
Project	RIVER STREET INFRASTRUCTURE AND STREETSCAPE PROJECT	Total Sheets	381
Drawing	**STREETSCAPE PLANTING AND PLANTER LAYOUT PLAN-9**	File No.	

File: C:\PW\WORKING\EAST01\D1174456\71113XXX_LA(DESIGN)_L-2.00 PLANTING AND PLANTER LAYOUT.DWG Plotted: 4/14/2022 10:56:18 AM

SEE SHEET 2.07

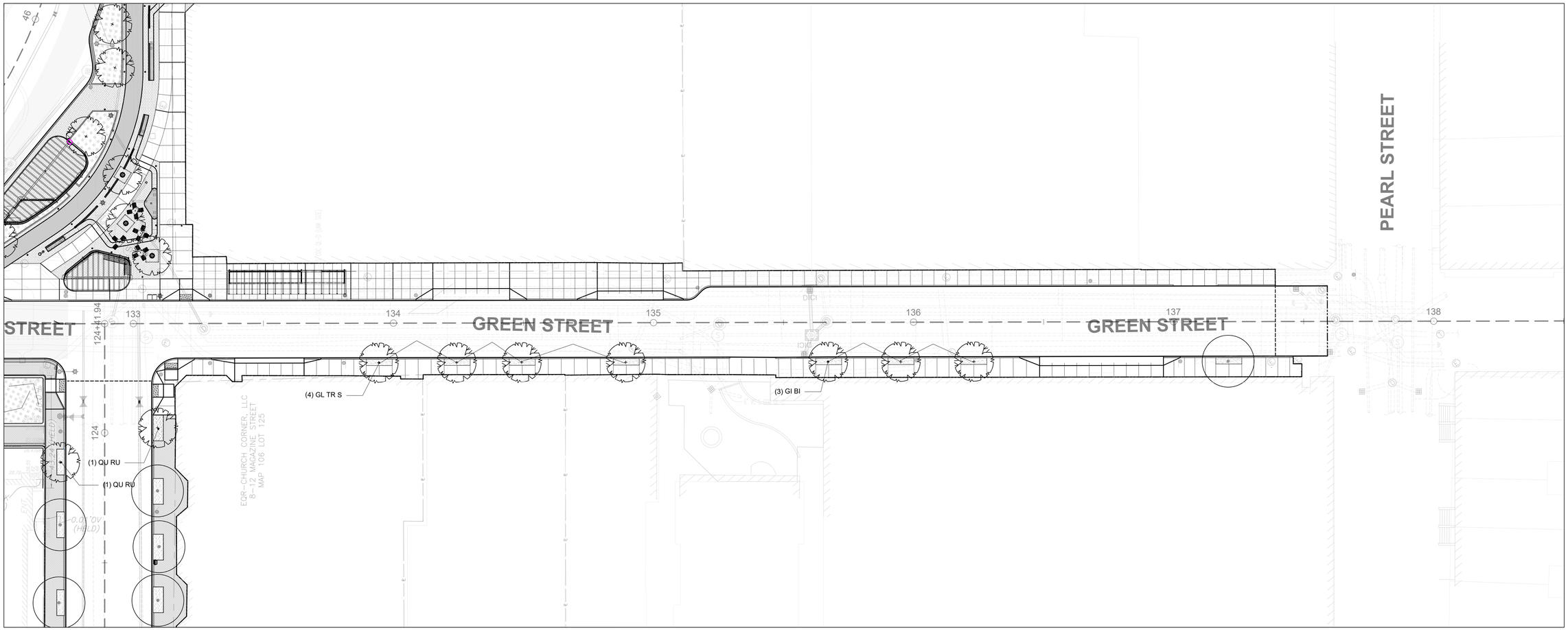

PLANTING LEGEND

SYM	TAG	DESCRIPTION	QTY
		EXISTING STREET TREE TO REMAIN	
		PROPOSED STREET TREES	
		HATCH AREA SHOWS LIMIT OF STRUCTURAL SOIL AREA	
		LIMIT OF WORK	

N

PLAN

0 20 50 100

SCALE: 1" = 20'

ISSUED FOR BID

HDR ENGINEERING, INC.
99 HIGH STREET, SUITE 2300
BOSTON, MASSACHUSETTS 02110–2378
(617) 357–7700

HALVORSON Tighe&Bond STUDIO
25 KINGSTON ST, BOSTON MA 02111-2200
(PHONE) 617.536.0380
WWW.HALVORSONDESIGN.COM

MASSACHUSETTS ROBERT URLIG REGISTERED LANDSCAPE ARCHITECT No. 981
04/18/2022

Scale			
Date			
Job No.			
Designed by			
Drawn by			
Checked by	No.	Description	Date
Approved by	REVISIONS		

THE WORKS — CAMBRIDGE DEPARTMENT OF PUBLIC

Client	CITY OF CAMBRIDGE, MA	Sheet	L-2.10
Project	RIVER STREET INFRASTRUCTURE AND STREETSCAPE PROJECT	Total Sheets	381
Drawing	**STREETSCAPE PLANTING AND PLANTER LAYOUT PLAN-10**	File No.	

File: C:\PWWORKING\EAST01\D1174456\7113XXX_LA(DESIGN)_L-2.00 PLANTING AND PLANTER LAYOUT.DWG Plotted: 4/15/2022 5:29:44 PM

File: C:\PWWORKING\EAST01\D1174456\7113XXX_LA(DESIGN)_L-2.00 PLANTING AND PLANTER LAYOUT.DWG Plotted: 4/14/2022 10:56:44 AM

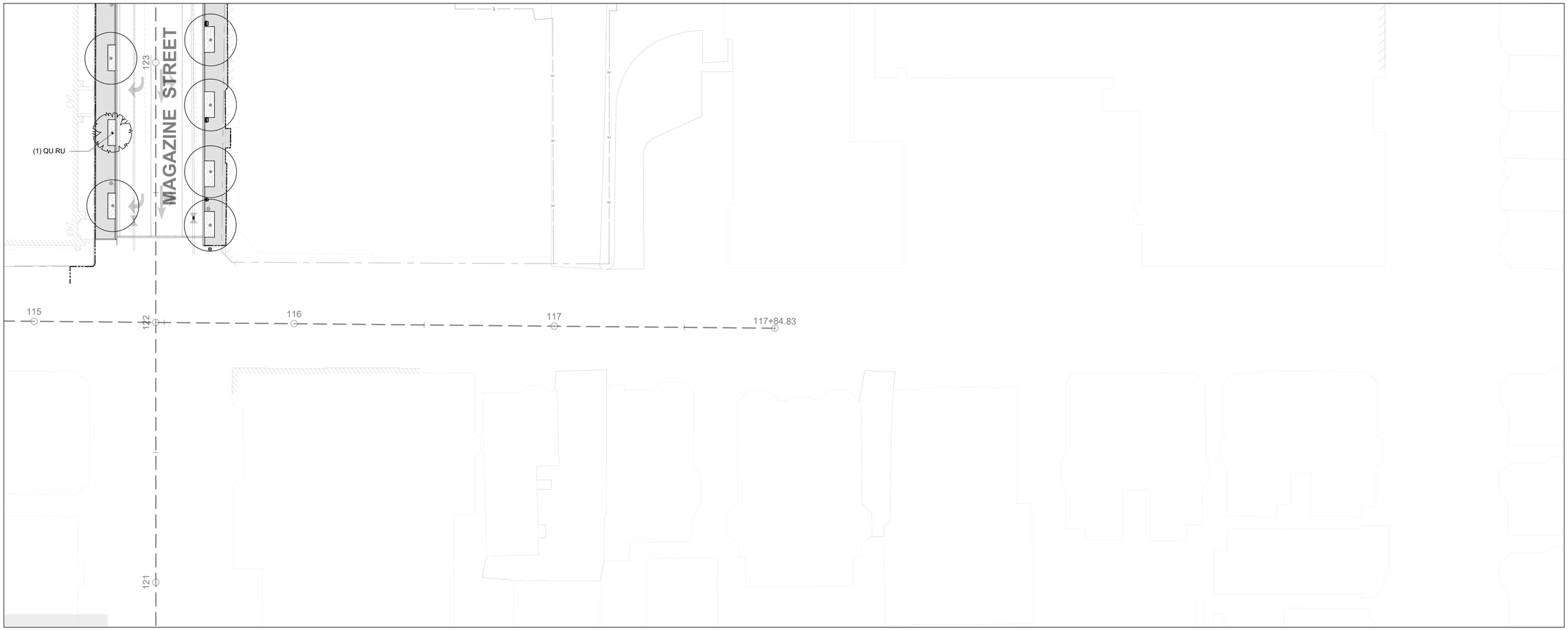

SEE SHEET L-2.07

PLANTING LEGEND

SYM	TAG	DESCRIPTION	QTY
		EXISTING STREET TREE TO REMAIN	
		PROPOSED STREET TREES	
		HATCH AREA SHOWS LIMIT OF STRUCTURAL SOIL AREA	
		LIMIT OF WORK	

N

PLAN

0 20 50 100

SCALE: 1" = 20'

ISSUED FOR BID

HDR ENGINEERING, INC.
99 HIGH STREET, SUITE 2300
BOSTON, MASSACHUSETTS 02110–2378
(617) 357–7700

HALVORSON Tighe&Bond STUDIO
25 KINGSTON ST, BOSTON MA 02111-2200
(PHONE) 617.536.0380
WWW.HALVORSONDESIGN.COM

MASSACHUSETTS ROBERT URLIG No. 981 REGISTERED LANDSCAPE ARCHITECT
04/18/2022

Scale			
Date			
Job No.			
Designed by			
Drawn by			
Checked by	No.	Description	Date
Approved by	REVISIONS		

CAMBRIDGE DEPARTMENT OF PUBLIC WORKS

Client	CITY OF CAMBRIDGE, MA	Sheet	L-2.11
Project	RIVER STREET INFRASTRUCTURE AND STREETSCAPE PROJECT	Total Sheets	381
Drawing	**STREETSCAPE PLANTING AND PLANTER LAYOUT PLAN-11**	File No.	

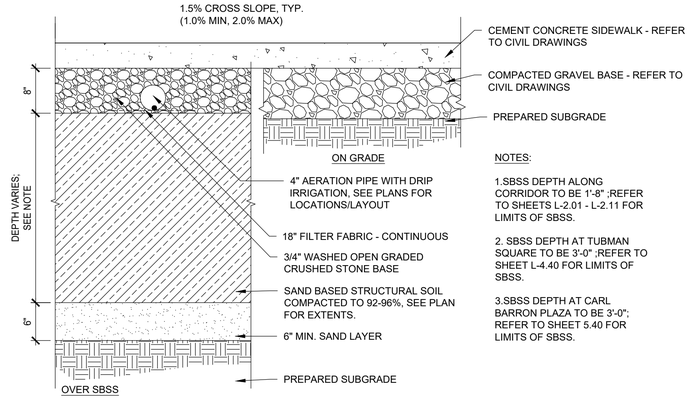

1 CEMENT CONCRETE SIDEWALK- OVER SBSS
SCALE 1"=1'-0"

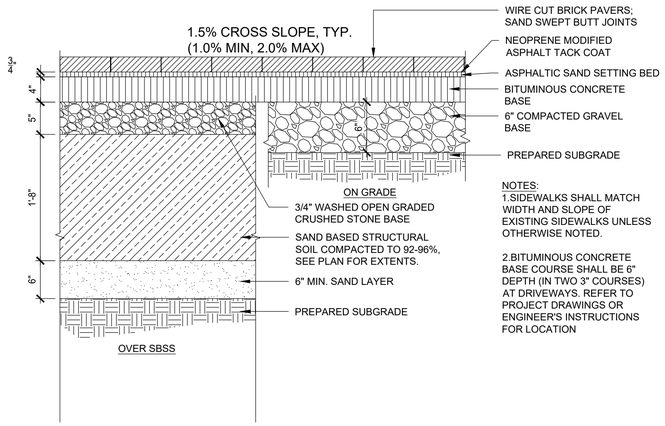

2 BRICK PAVING ON ASPHALT BASE
SCALE 1"=1'-0"

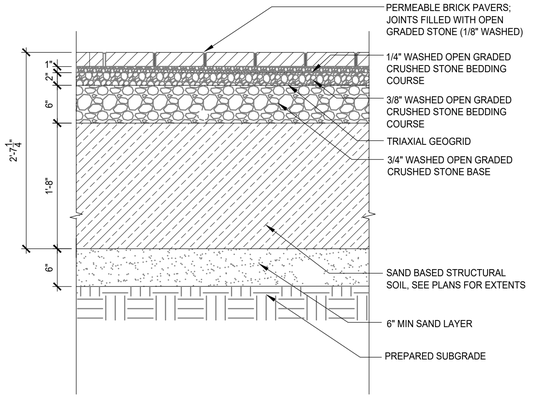

3 BRICK PAVING - PERMEABLE
SCALE 1"=1'-0"

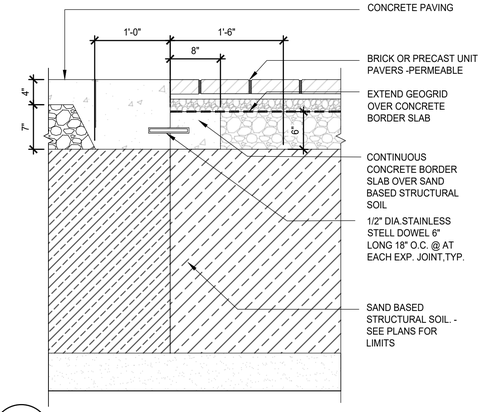

4 CONCRETE PAVING TO PERMEABLE UNIT PAVERS TRANSITION
SCALE 1"=1'-0"

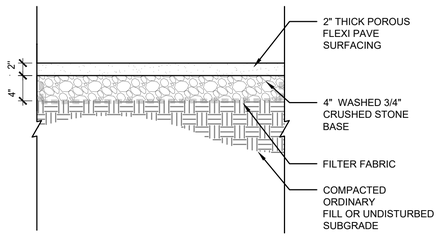

5 FLEXIBLE POROUS PAVING
SCALE 1"=1'-0"

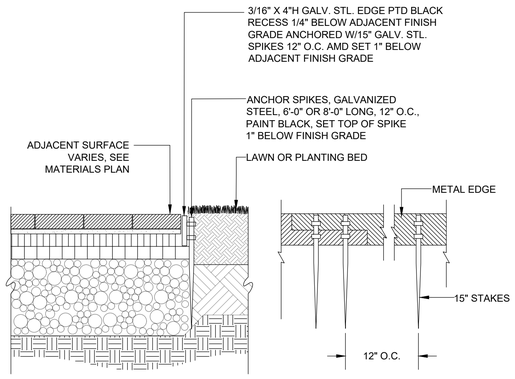

6 STEEL EDGING
SCALE 1"=1'-0"

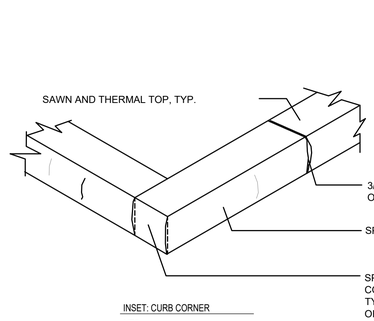

INSET: CURB CORNER
NTS

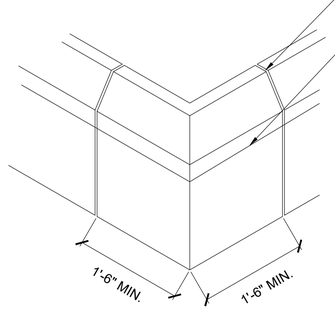

NOTES:
1. CURBS WITH RADIUS 100' OR LESS SHALL BE CUT IN RADIAL SECTIONS.

CORNER PIECES ARE ONE SINGLE PIECE - NOT MITERED JOINTS

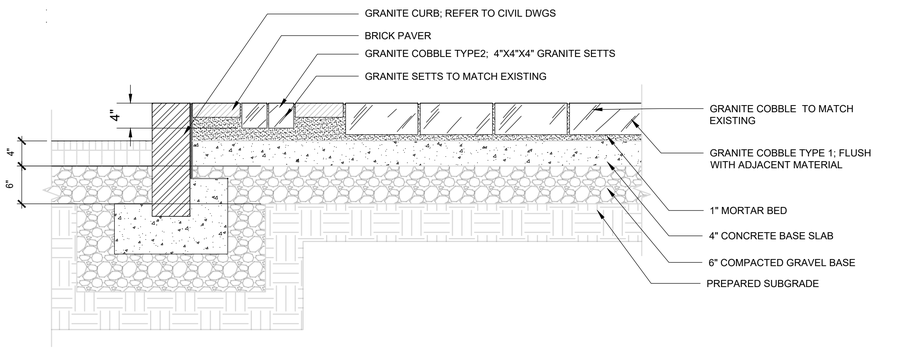

7 GRANITE COBBLE PAVERS - TYPE 1 AND TYPE 2
SCALE 1"=1'-0"

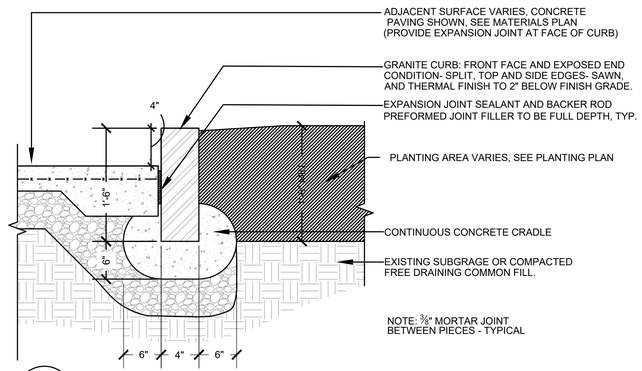

8 GRANITE PLANTER CURB - STREETSCAPE
SCALE 1"=1'-0"

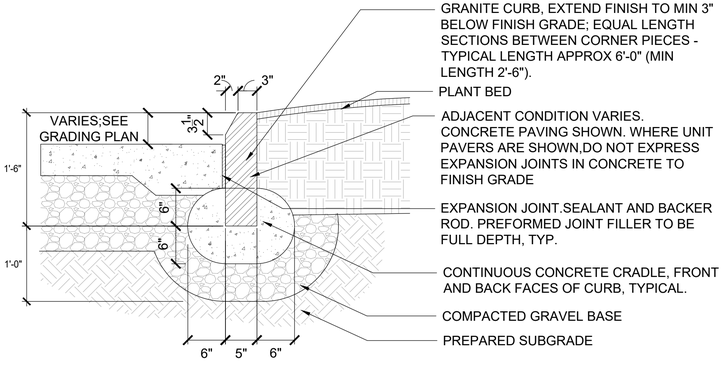

9 GRANITE PLANTER CURB -PLAZA
SCALE 1"=1'-0"

ISSUED FOR BID

HDR ENGINEERING, INC.
99 HIGH STREET, SUITE 2300
BOSTON, MASSACHUSETTS 02110-2378
(617) 357-7700

HALVORSON Tighe&Bond STUDIO
25 KINGSTON ST, BOSTON MA 02111-2200
(PHONE) 617.536.0380
WWW.HALVORSONDESIGN.COM

MASSACHUSETTS ROBERT UHLIG REGISTERED LANDSCAPE ARCHITECT No. 981
04/18/2022

Scale			
Date			
Job No.			
Designed by			
Drawn by			
Checked by	No.	Description	Date
Approved by	REVISIONS		

THE WORKS — CAMBRIDGE DEPARTMENT OF PUBLIC WORKS

Client: CITY OF CAMBRIDGE, MA	Sheet: L-3.01
Project: RIVER STREET INFRASTRUCTURE AND STREETSCAPE PROJECT	Total Sheets: 381
Drawing: **STREETSCAPE AND STANDARD DETAILS**	File No.

Plotted: 4/14/2022 11:27:21 AM
File: C:\PWWORKING\EAST\01\D1174456\7113XXX_LA(DESIGN)_L-3.00 STREETSCAPE DETAILS.DWG

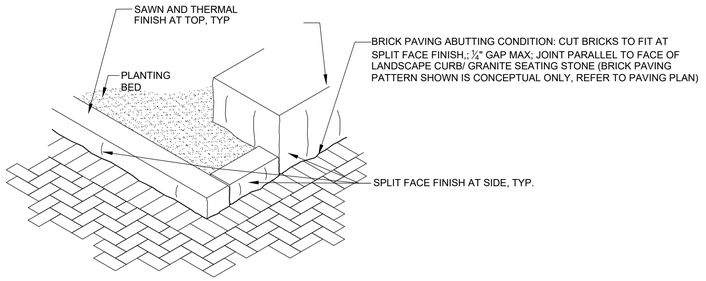

1 GRANITE SEATING STONE & LANDSCAPE GRANITE CURB - INTERFACE DETAILS

SCALE 1/2"=1'-0"

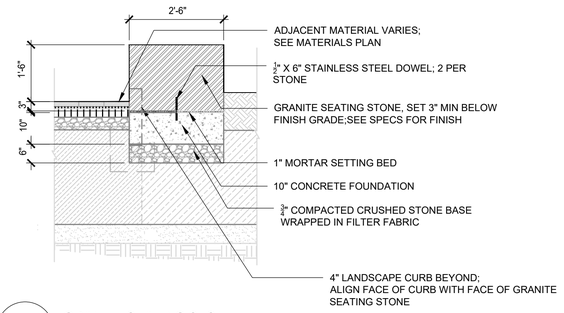

2 GRANITE SEATING STONE

SCALE 1/2"=1'-0"

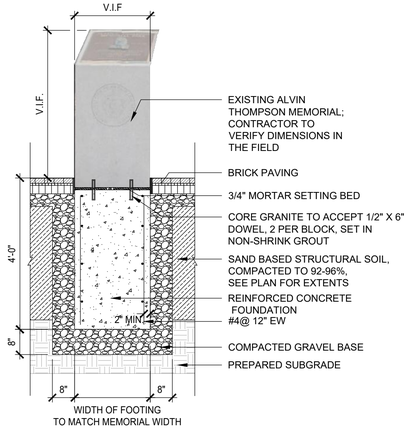

3 RELOCATED ALVIN THOMPSON MEMORIAL

SCALE 1/2"=1'-0"

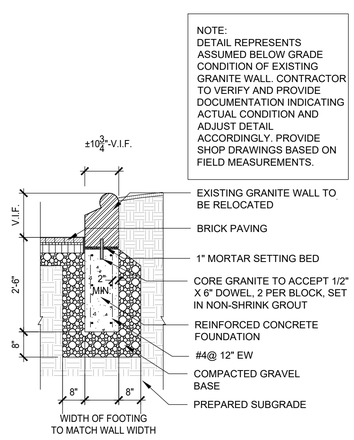

NOTE:
DETAIL REPRESENTS ASSUMED BELOW GRADE CONDITION OF EXISTING GRANITE WALL. CONTRACTOR TO VERIFY AND PROVIDE DOCUMENTATION INDICATING ACTUAL CONDITION AND ADJUST DETAIL ACCORDINGLY. PROVIDE SHOP DRAWINGS BASED ON FIELD MEASUREMENTS.

4 RECONFIGURED GRANITE PLANTER WALL

SCALE 1/2"=1'-0"

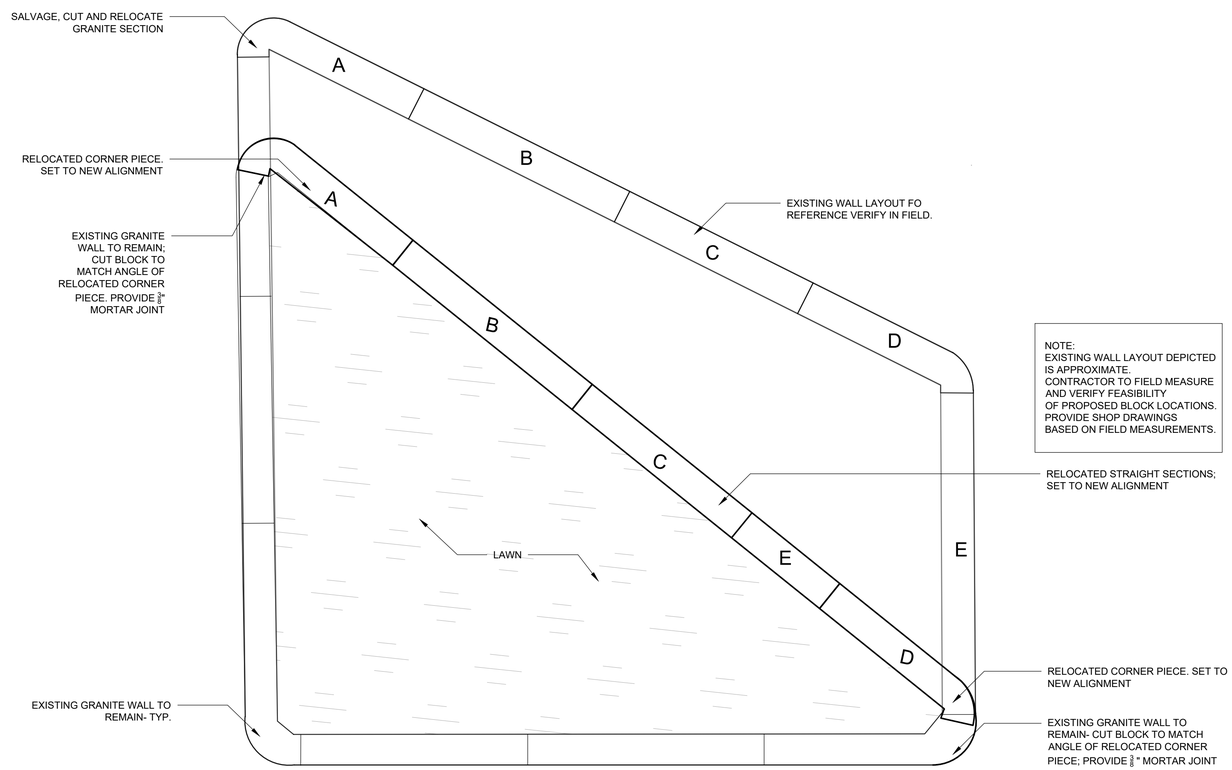

NOTE:
EXISTING WALL LAYOUT DEPICTED IS APPROXIMATE. CONTRACTOR TO FIELD MEASURE AND VERIFY FEASIBILITY OF PROPOSED BLOCK LOCATIONS. PROVIDE SHOP DRAWINGS BASED ON FIELD MEASUREMENTS.

5 RECONFIGURED GRANITE PLANTER WALL - PLAN VIEW

SCALE 1/2"=1'-0"

ISSUED FOR BID

HDR ENGINEERING, INC.
99 HIGH STREET, SUITE 2300
BOSTON, MASSACHUSETTS 02110-2378
(617) 357-7700

HALVORSON Tighe&Bond STUDIO
25 KINGSTON ST, BOSTON MA 02111-2200
(PHONE) 617.536.0380
WWW.HALVORSONDESIGN.COM

MASSACHUSETTS ROBERT URLIG No. 981 REGISTERED LANDSCAPE ARCHITECT
04/18/2022

Scale			
Date			
Job No.			
Designed by			
Drawn by			
Checked by	No.	Description	Date
Approved by	REVISIONS		

THE WORKS — CAMBRIDGE DEPARTMENT OF PUBLIC WORKS

Client	CITY OF CAMBRIDGE, MA	Sheet	L-3.02
Project	RIVER STREET INFRASTRUCTURE AND STREETSCAPE PROJECT	Total Sheets	381
Drawing	**STREETSCAPE AND STANDARD DETAILS**	File No.	

Plotted: 4/14/2022 11:27:29 AM
File: C:\PWWORKING\EAST01\D1174456\7113XXX_LA(DESIGN)_L-3.00 STREETSCAPE DETAILS.DWG

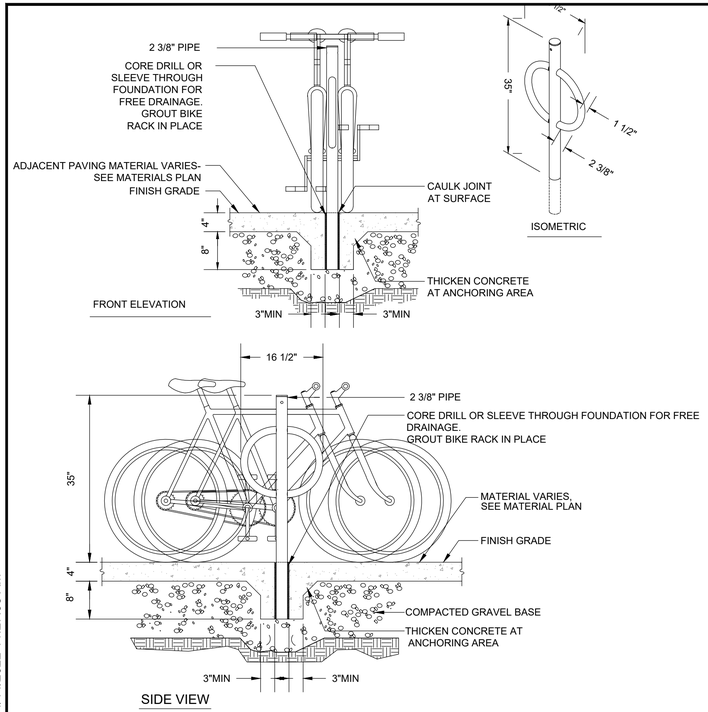

1 BIKE RACK CITY OF CAMBRIDGE STANDARD

SCALE: 3/4" = 1'-0"

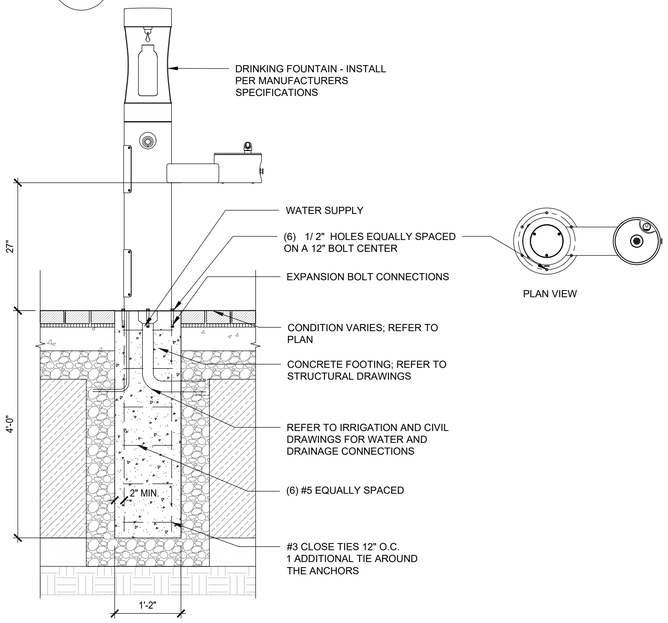

4 WATER FILL STATION

scale 3/4"=1'-0"

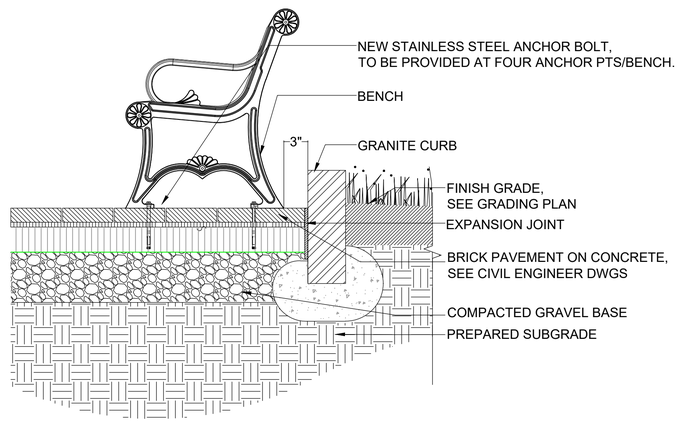

2 METAL BENCH WITH BACK

SCALE 1"=1'-0"

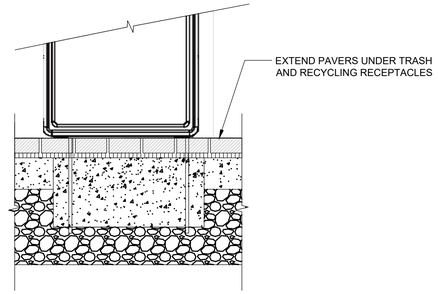

TRASH AND RECYCLING RECEPTACLES - PAVER CONDITION

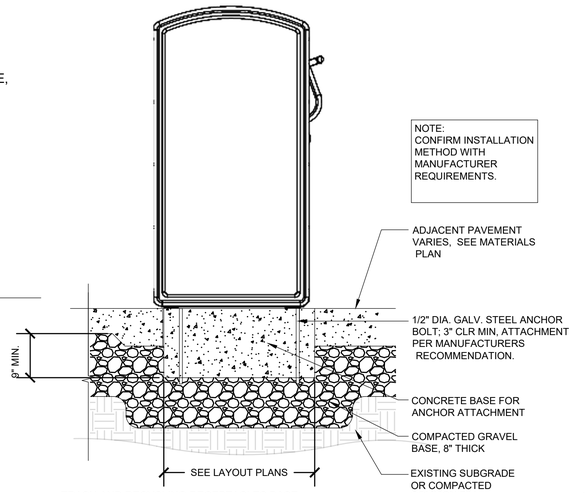

TRASH AND RECYCLING RECEPTACLES BASE

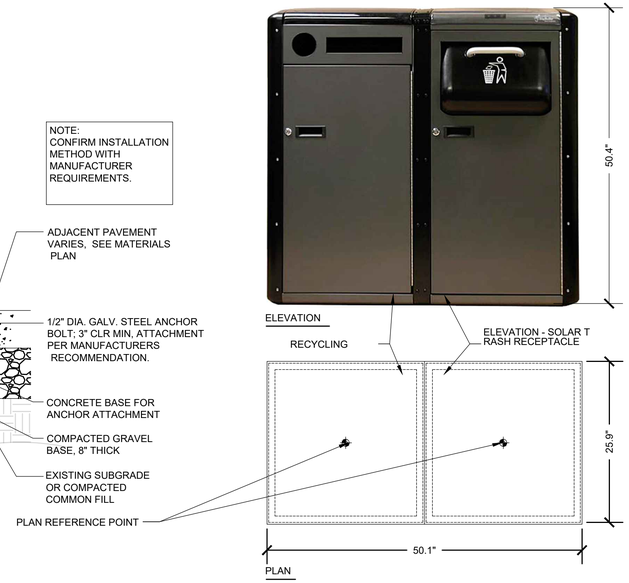

3 TRASH AND RECYCLING RECEPTACLES - CONCRETE PAVING CONDITION

SCALE 1"=1'-0"

ISSUED FOR BID

HDR ENGINEERING, INC.
99 HIGH STREET, SUITE 2300
BOSTON, MASSACHUSETTS 02110-2378
(617) 357-7700

HALVORSON Tighe&Bond STUDIO
25 KINGSTON ST, BOSTON MA 02111-2200
(PHONE) 617.536.0380
WWW.HALVORSONDESIGN.COM

MASSACHUSETTS ROBERT URLIB No. 981 REGISTERED LANDSCAPE ARCHITECT
04/18/2022

Scale			
Date			
Job No.			
Designed by			
Drawn by			
Checked by	No.	Description	Date
Approved by	REVISIONS		

THE WORKS — CAMBRIDGE DEPARTMENT OF PUBLIC WORKS

Client: CITY OF CAMBRIDGE, MA	Sheet: L-3.03
Project: RIVER STREET INFRASTRUCTURE AND STREETSCAPE PROJECT	Total Sheets: 381
Drawing: **STREETSCAPE AND STANDARD DETAILS**	File No.

Plotted: 4/14/2022 11:27:38 AM
File: C:\PWWORKING\EAST01\D1174456\7113XXX_LA(DESIGN)_L-3.00 STREETSCAPE DETAILS.DWG

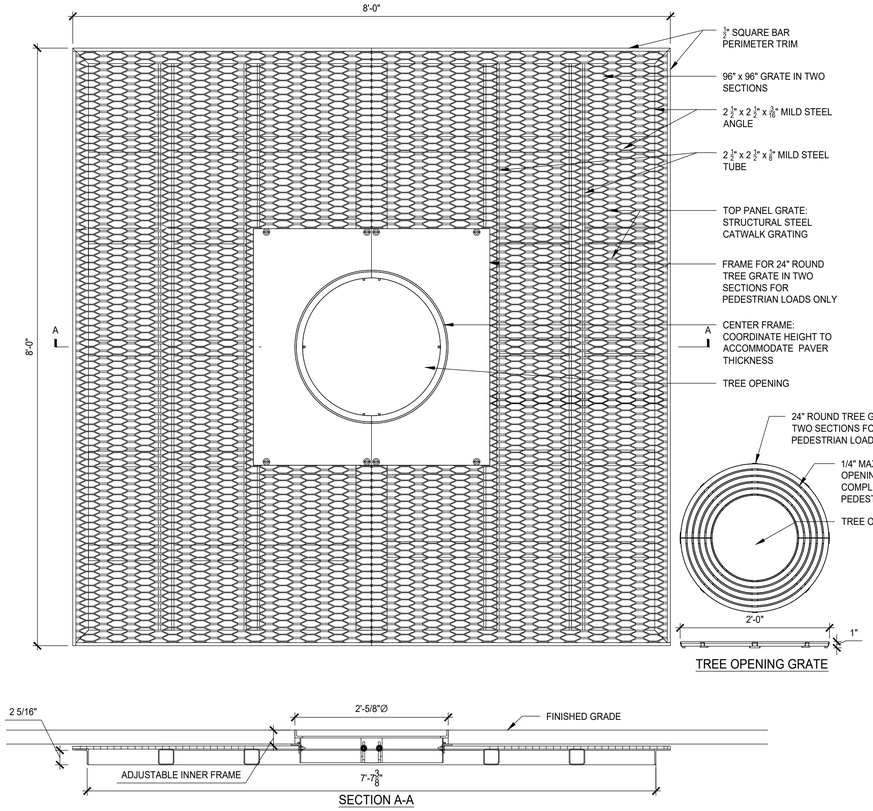

1 **PAVER TREE GRATE - 8'-0" SQUARE**
Scale: 1"=1'-0"

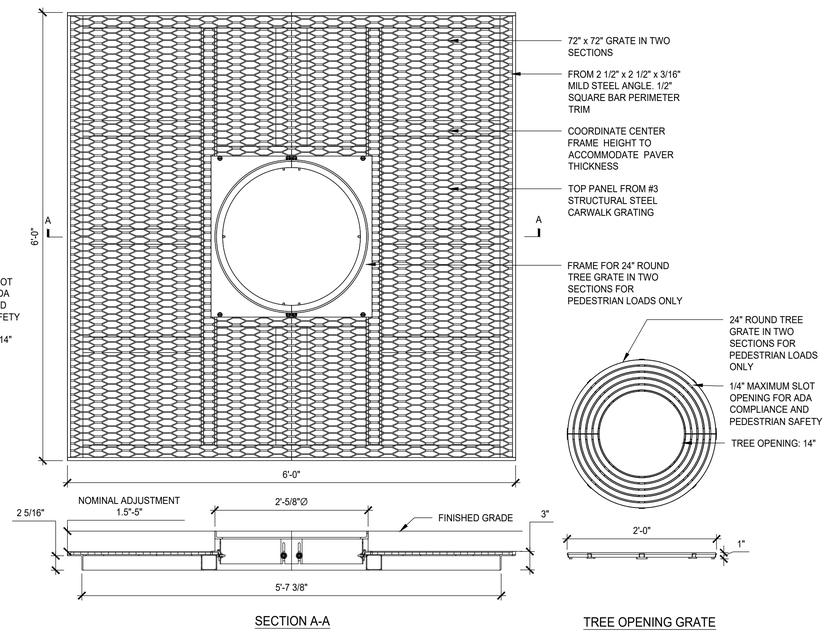

2 **PAVER TREE GRATE - 6'-0" SQUARE**
Scale: 1"=1'-0"

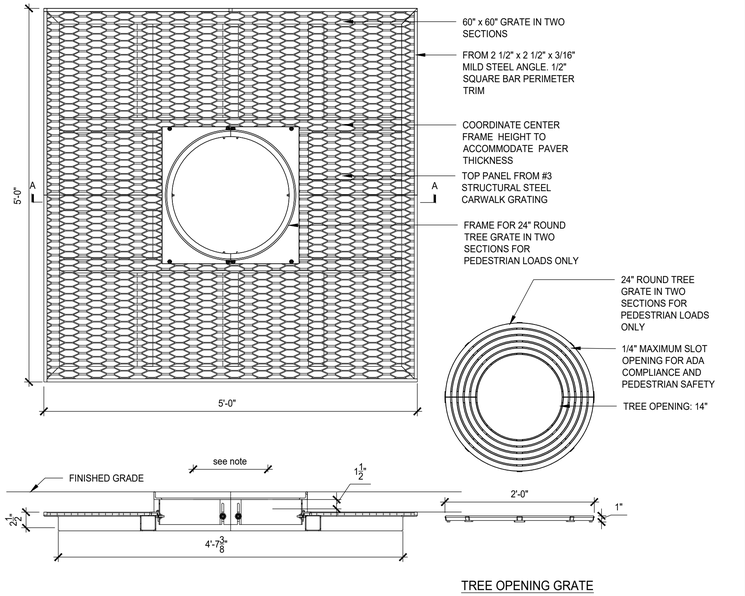

3 **PAVER TREE GRATE - 5'-0" SQUARE**
Scale: 1"=1'-0"

ISSUED FOR BID

HDR ENGINEERING, INC.
99 HIGH STREET, SUITE 2300
BOSTON, MASSACHUSETTS 02110–2378
(617) 357–7700

HALVORSON Tighe&Bond STUDIO
25 KINGSTON ST. BOSTON MA 02111-2200
(PHONE) 617.536.0380
WWW.HALVORSONDESIGN.COM

MASSACHUSETTS ROBERT UHLIG No. 981 REGISTERED LANDSCAPE ARCHITECT
04/18/2022

Scale			
Date			
Job No.			
Designed by			
Drawn by			
Checked by	No.	Description	Date
Approved by	REVISIONS		

THE WORKS — CAMBRIDGE DEPARTMENT OF PUBLIC WORKS

Client: CITY OF CAMBRIDGE, MA
Project: RIVER STREET INFRASTRUCTURE AND STREETSCAPE PROJECT
Drawing: **STREETSCAPE AND STANDARD DETAILS**
Sheet: L-3.04
Total Sheets: 381
File No.

Plotted: 4/14/2022 11:27:50 AM
File: C:\PWWORKING\EAST01\D1174456\7113XXX_LA(DESIGN)_L-3.00 STREETSCAPE DETAILS.DWG

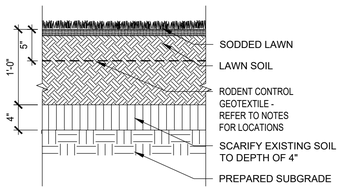

1 SOD LAWN
SCALE 1"=1'-0"

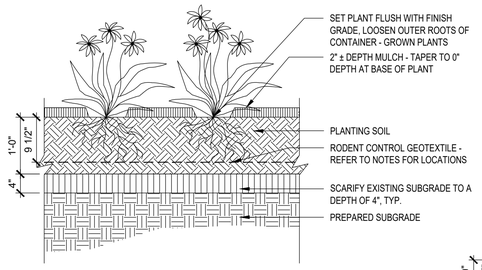

NOTES:
1. USE TRIANGULAR PATTERN FOR PLANT SPACING UNLESS OTHERWISE NOTED
2. INSTALL RODENT CONTROL GEOTEXTILE IN ALL PLANT BEDS IN TUBMAN SQUARE AND CARL BARRON PLAZA. OVERLAP FABRIC WHERE PERENNIAL PLANT BEDS TRANSITION TO SHRUB PLANTING BEDS

2 PERENNIAL PLANTING
SCALE: 3/4" = 1'-0"

PLANTING NOTES:
1. REMOVE UPPER THIRD OF BURLAP PRIOR TO BACKFILLING, IF CONTAINERIZED, REMOVE PLANTS FROM POTS PRIOR TO PLANTING AND SCARIFY ROOT BALL IN 4 PLACES TO ½" DEPTH
2. LOOSE OR CRACKED ROOT BALLS WILL NOT BE ACCEPTED FOR PLANTING
3. ROOT BALL SHALL SIT ON PREPARED SUBGRADE
4. DO NOT EXCAVATE BELOW ROOT BALL
5. PLANTING PIT TO BE 3 TIMES WIDTH OF ROOT BALL
6. FLOOD WATERING SAUCER TWICE DURING FIRST 24 HOURS AFTER PLANTING
7. RAISE AND REPLANT SHRUBS THAT SETTLE AFTER PLANTING AND WATERING
8. SCARIFY SOILS CONTINUOUSLY TO A DEPTH OF 2" AT INTERFACE BETWEEN SOIL TYPES, LIFTS AND SUBGRADE TO PROMOTE BLENDING OF SOILS.
9. USE TRIANGULAR PATTERN FOR PLANT SPACING UNLESS OTHERWISE NOTED
10. INSTALL RODENT CONTROL GEOTEXTILE IN ALL PLANT BEDS IN TUBMAN SQUARE AND CARL BARRON PLAZA. OVERLAP FABRIC WHERE PERENNIAL PLANT BEDS TRANSITION TO SHRUB PLANTING BEDS

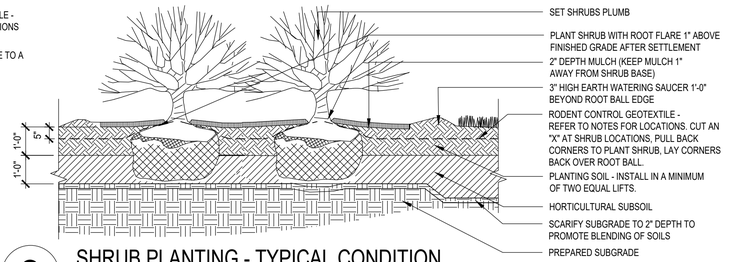

3 SHRUB PLANTING - TYPICAL CONDITION
SCALE: 3/8"=1'-0"

NOTE:
1. SEE TREE PROTECTION SPECIFICATION.
2. TREE PROTECTION BELOW IS FOR ALL EXISTING STREET TREES ALONG RIVER STREET
3. TREE FEEDING IN TREE PIT BEFORE AND AFTER CONSTRUCTION BY CONTRACTOR CERTIFIED ARBORIST PER DIRECTION OF CITY ARBORIST.
4. NO STORAGE OF MATERIAL OR COMPACTION OF ROOTS WITHIN OPEN TREE PIT AREA.
5. WATER EXISTING TREES DURING CONSTRUCTION FOR DURATION OF PROJECT.
6. PROTECT ROOTS WHEN SIDEWALK IS DEMOLISHED.
7. AIR SPADING & ROOT PRUNING BY CONTRACTOR CERTIFIED ARBORIST FOR SELECT LARGER MATURE TREES (ASSUME 25) WHOSE ROOT SYSTEMS ARE MORE EXTENSIVE AS DIRECTED BY CITY ARBORIST.
8. CONTRACTOR CERTIFIED ARBORIST TO PRUNE HORIZONTAL BRANCHES THAT PROVIDE CONFLICT AND DEAD WOOD, ETC AS DIRECTED BY CITY ARBORIST.

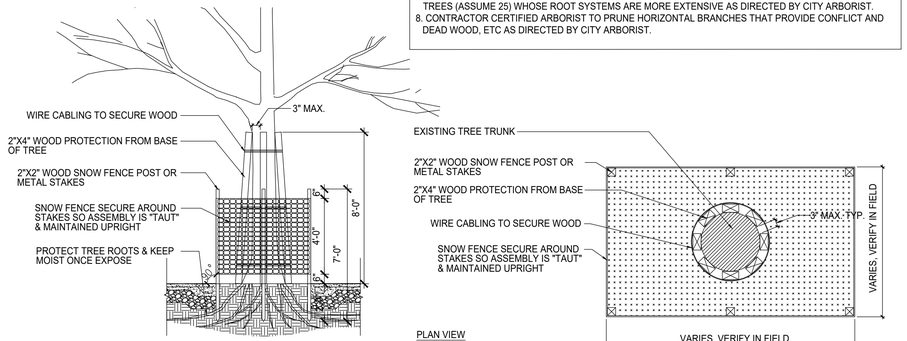

4 TREE PROTECTION FENCE
SCALE 3/4" = 1'-0"

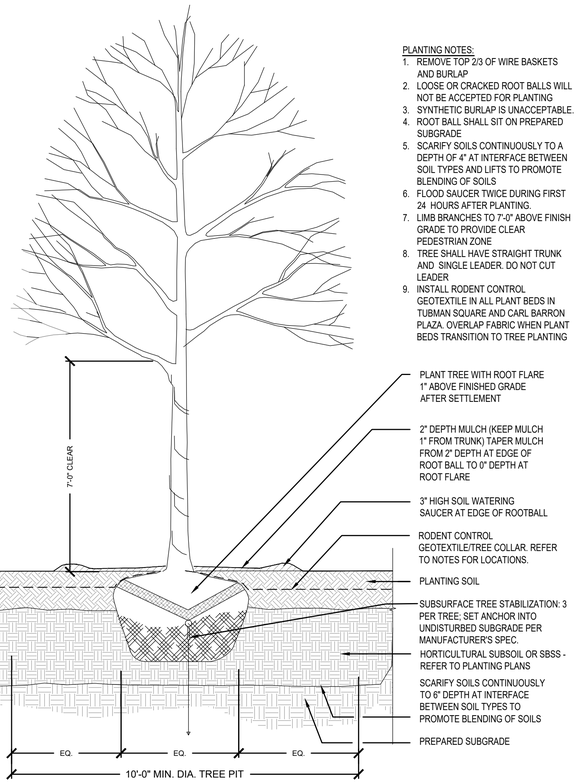

PLANTING NOTES:
1. REMOVE TOP 2/3 OF WIRE BASKETS AND BURLAP
2. LOOSE OR CRACKED ROOT BALLS WILL NOT BE ACCEPTED FOR PLANTING
3. SYNTHETIC BURLAP IS UNACCEPTABLE.
4. ROOT BALL SHALL SIT ON PREPARED SUBGRADE
5. SCARIFY SOILS CONTINUOUSLY TO A DEPTH OF 4" AT INTERFACE BETWEEN SOIL TYPES AND LIFTS TO PROMOTE BLENDING OF SOILS
6. FLOOD SAUCER TWICE DURING FIRST 24 HOURS AFTER PLANTING.
7. LIMB BRANCHES TO 7'-0" ABOVE FINISH GRADE TO PROVIDE CLEAR PEDESTRIAN ZONE
8. TREE SHALL HAVE STRAIGHT TRUNK AND SINGLE LEADER. DO NOT CUT LEADER
9. INSTALL ROOT CONTROL GEOTEXTILE IN ALL PLANT BEDS IN TUBMAN SQUARE AND CARL BARRON PLAZA. OVERLAP FABRIC WHEN PLANT BEDS TRANSITION TO TREE PLANTING

5 TREE PLANTING
SCALE 1/2"=1'-0"

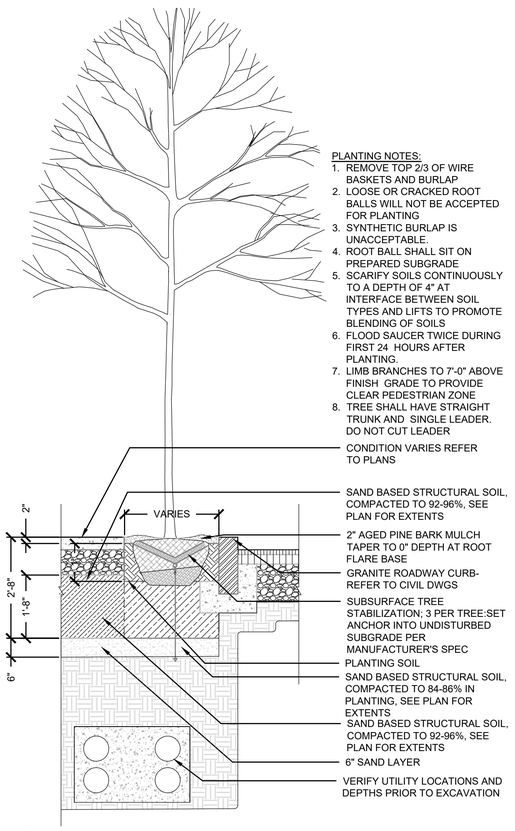

PLANTING NOTES:
1. REMOVE TOP 2/3 OF WIRE BASKETS AND BURLAP
2. LOOSE OR CRACKED ROOT BALLS WILL NOT BE ACCEPTED FOR PLANTING
3. SYNTHETIC BURLAP IS UNACCEPTABLE.
4. ROOT BALL SHALL SIT ON PREPARED SUBGRADE
5. SCARIFY SOILS CONTINUOUSLY TO A DEPTH OF 4" AT INTERFACE BETWEEN SOIL TYPES AND LIFTS TO PROMOTE BLENDING OF SOILS
6. FLOOD SAUCER TWICE DURING FIRST 24 HOURS AFTER PLANTING.
7. LIMB BRANCHES TO 7'-0" ABOVE FINISH GRADE TO PROVIDE CLEAR PEDESTRIAN ZONE
8. TREE SHALL HAVE STRAIGHT TRUNK AND SINGLE LEADER. DO NOT CUT LEADER

6 TREE PLANTING IN OPEN TREE PIT
SCALE 1/2"=1'-0"

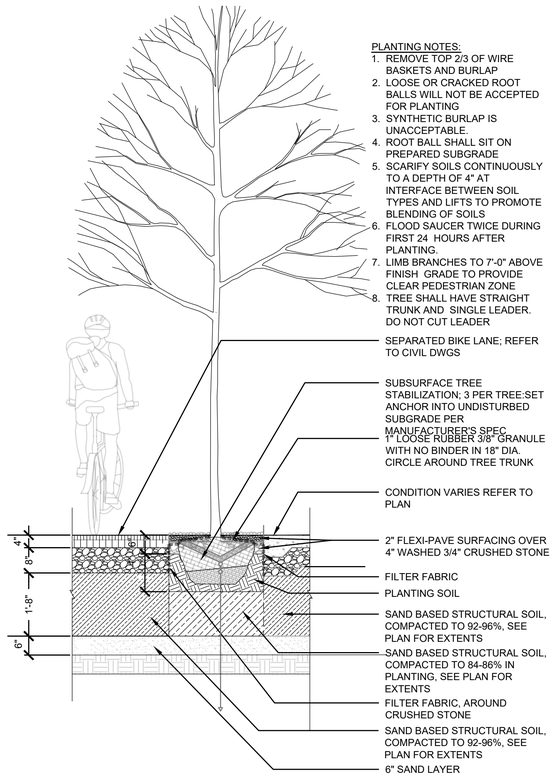

7 TREE PLANTING WITH FLEXIBLE POROUS PAVING
SCALE 1/2"=1'-0"

PLANTING NOTES:
1. REMOVE TOP 2/3 OF WIRE BASKETS AND BURLAP
2. LOOSE OR CRACKED ROOT BALLS WILL NOT BE ACCEPTED FOR PLANTING
3. SYNTHETIC BURLAP IS UNACCEPTABLE.
4. ROOT BALL SHALL SIT ON PREPARED SUBGRADE
5. SCARIFY SOILS CONTINUOUSLY TO A DEPTH OF 4" AT INTERFACE BETWEEN SOIL TYPES AND LIFTS TO PROMOTE BLENDING OF SOILS
6. FLOOD SAUCER TWICE DURING FIRST 24 HOURS AFTER PLANTING.
7. LIMB BRANCHES TO 7'-0" ABOVE FINISH GRADE TO PROVIDE CLEAR PEDESTRIAN ZONE
8. TREE SHALL HAVE STRAIGHT TRUNK AND SINGLE LEADER. DO NOT CUT LEADER
9. INSTALL RODENT CONTROL GEOTEXTILE IN ALL PLANT BEDS IN TUBMAN SQUARE AND CARL BARRON PLAZA. OVERLAP FABRIC WHEN PLANT BEDS TRANSITION TO TREE PLANTING

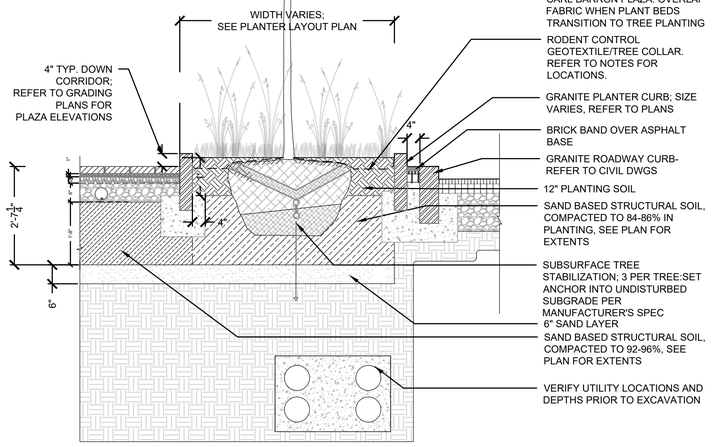

8 TREE PLANTING IN RAISED PLANTER
SCALE 1/2"=1'-0"

ISSUED FOR BID

HDR ENGINEERING, INC.
99 HIGH STREET, SUITE 2300
BOSTON, MASSACHUSETTS 02110–2378
(617) 357–7700

HALVORSON Tighe&Bond STUDIO
25 KINGSTON ST. BOSTON MA 02111-2200
(PHONE) 617.536.0380
WWW.HALVORSONDESIGN.COM

MASSACHUSETTS ROBERT URLIG No. 981 REGISTERED LANDSCAPE ARCHITECT
04/18/2022

Scale			
Date			
Job No.			
Designed by			
Drawn by			
Checked by	No.	Description	Date
Approved by	REVISIONS		

THE WORKS — CAMBRIDGE DEPARTMENT OF PUBLIC WORKS

Client	CITY OF CAMBRIDGE, MA	Sheet L-3.05
Project	RIVER STREET INFRASTRUCTURE AND STREETSCAPE PROJECT	Total Sheets 381
Drawing	**STREETSCAPE AND STANDARD DETAILS**	File No.

File: C:\PW\WORKING\EAST01\D1174456\7113XXX_LA(DESIGN)_L-3.00 STREETSCAPE DETAILS.DWG
Plotted: 4/14/2022 11:27:59 AM

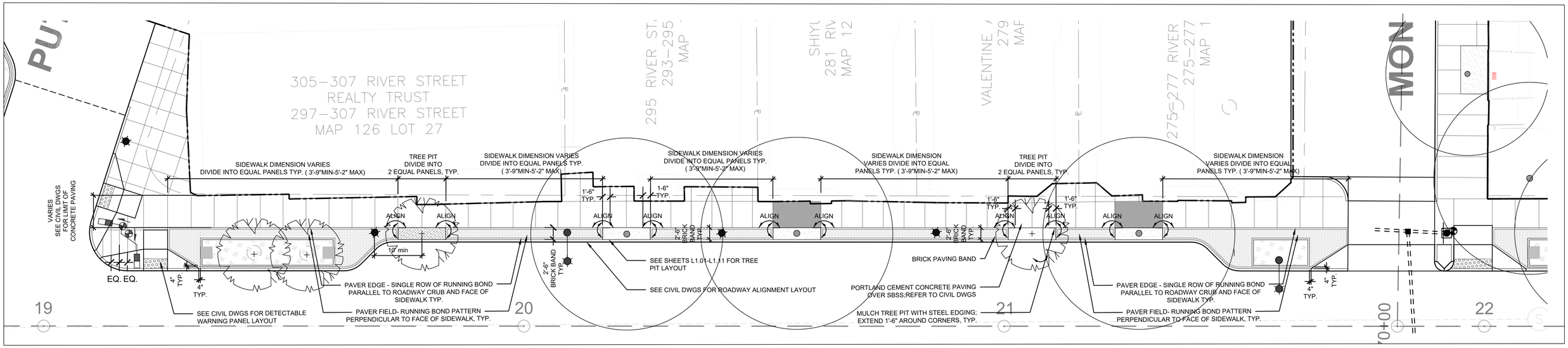

1 **TYPICAL CONCRETE SIDEWALK SAW CUT PATTERN ENLARGEMENT AT NORTH OF RIVER AVENUE**

SCALE: 1"= 10'-0"

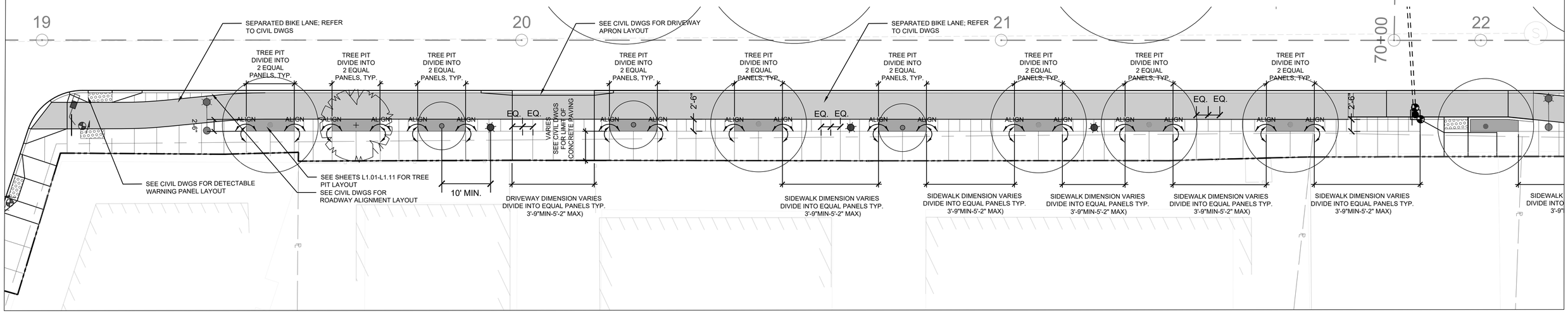

2 **TYPICAL CONCRETE SIDEWALK SAW CUT PATTERN ENLARGEMENT AT SOUTH OF RIVER AVENUE**

SCALE: 1"= 10'-0"

PLAN

0 20 50 100

SCALE: 1" = 20'

ISSUED FOR BID

HDR ENGINEERING, INC.
99 HIGH STREET, SUITE 2300
BOSTON, MASSACHUSETTS 02110–2378
(617) 357–7700

HALVORSON Tighe&Bond STUDIO
25 KINGSTON ST. BOSTON MA 02111-2200
(PHONE) 617.536.0380
WWW.HALVORSONDESIGN.COM

MASSACHUSETTS ROBERT UHLIG No. 981 REGISTERED LANDSCAPE ARCHITECT
04/18/2022

Scale			
Date			
Job No.			
Designed by			
Drawn by			
Checked by	No.	Description	Date
Approved by	REVISIONS		

THE WORKS — CAMBRIDGE DEPARTMENT OF PUBLIC WORKS

Client: CITY OF CAMBRIDGE, MA

Project: RIVER STREET
INFRASTRUCTURE AND STREETSCAPE PROJECT

Drawing: **ENLARGEMENT PLANS**

Sheet: L-3.06

Total Sheets: 381

File No.

Plotted: 4/14/2022 11:08:26 AM
File: C:\PWWORKING\EAST01\D1174456\7113XXX_LA(DESIGN)_L-3.00 ENLARGEMENT PLANS.DWG

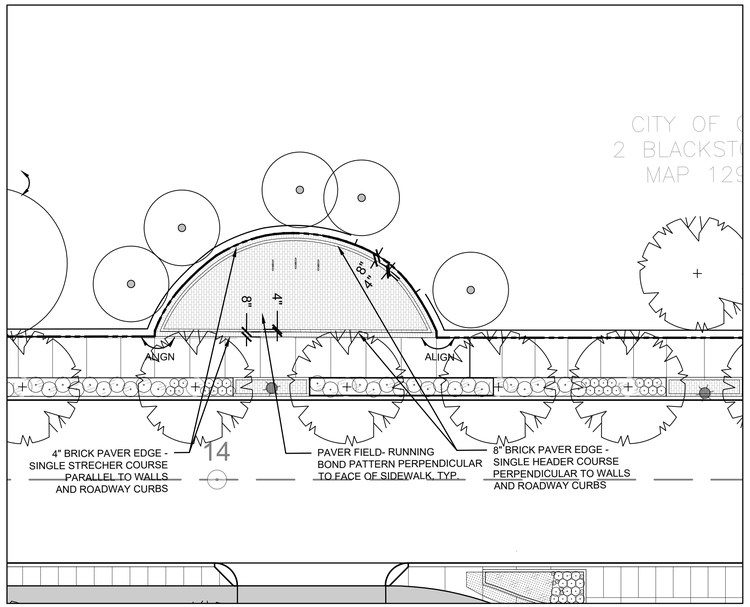

1 **PAVING ENLARGEMENT- PRESS PARK AND RIVER ST**

SCALE 1/8"=1'-0"

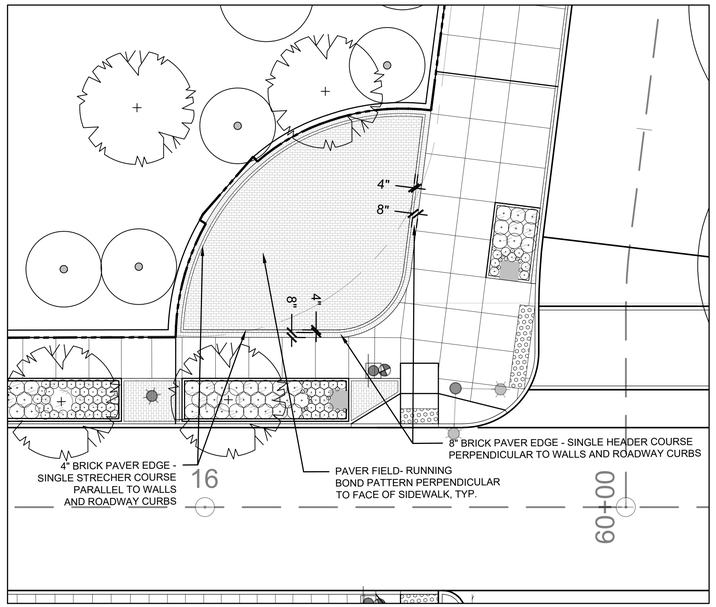

2 **PAVING ENLARGEMENT- PRESS PARK AND BLACKSTONE ST**

SCALE 1/8"=1'-0"

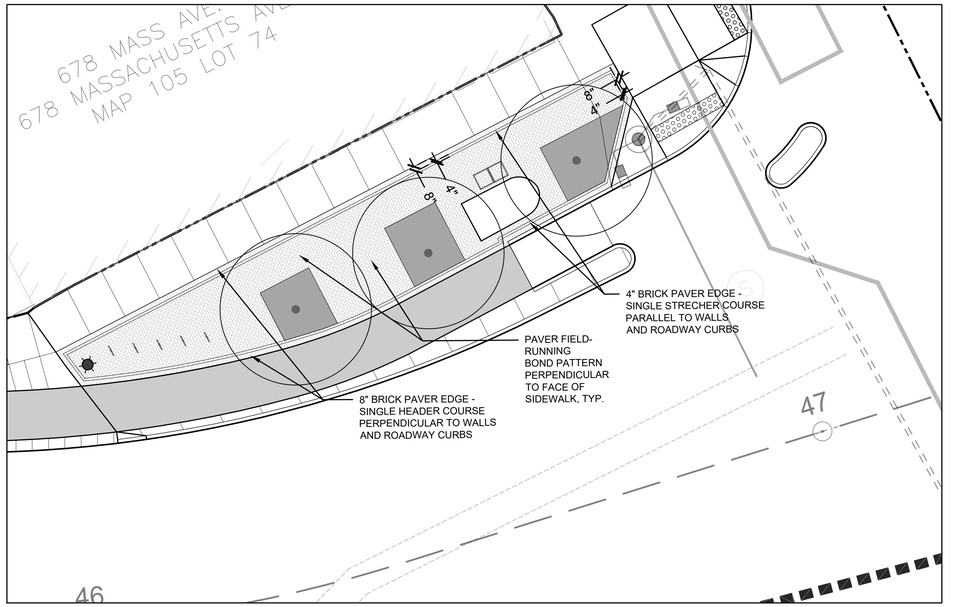

3 **PAVING ENLARGEMENT- RIVER ST AND MASS AVE**

SCALE 1/8"=1'-0"

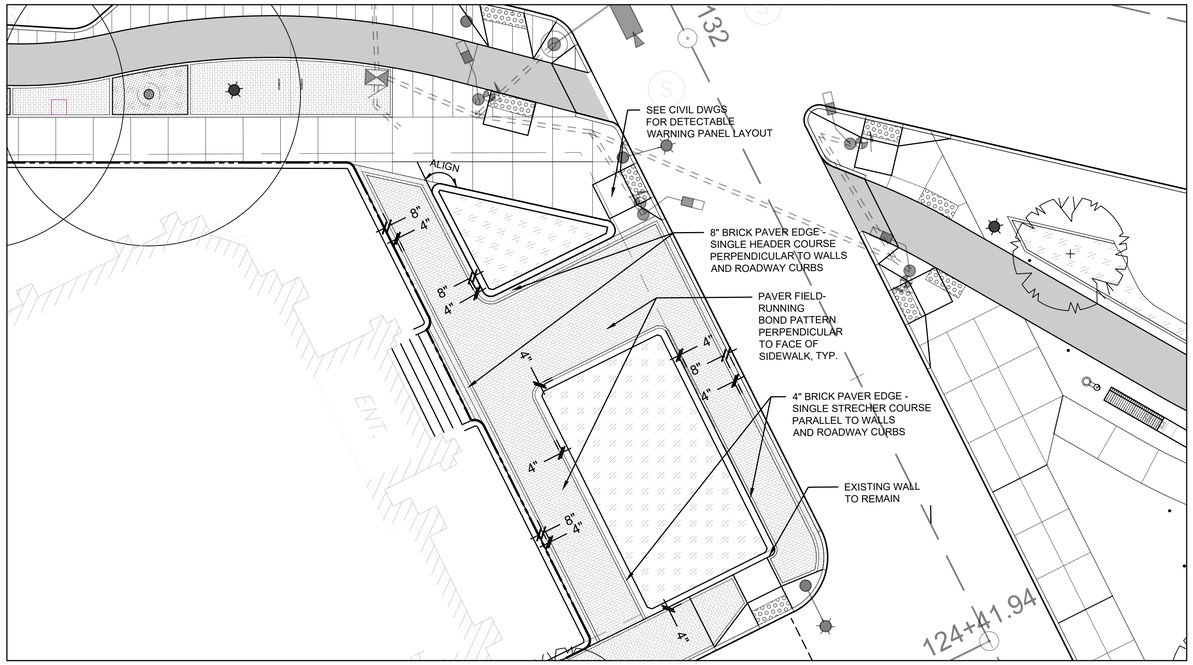

4 **PAVING ENLARGEMENT- FIRST BAPTIST CHURCH**

SCALE 1/8"=1'-0"

ISSUED FOR BID

HDR ENGINEERING, INC.
99 HIGH STREET, SUITE 2300
BOSTON, MASSACHUSETTS 02110–2378
(617) 357–7700

HALVORSON Tighe&Bond STUDIO
25 KINGSTON ST. BOSTON MA 02111-2200
(PHONE) 617.536.0380
WWW.HALVORSONDESIGN.COM

MASSACHUSETTS ROBERT UHLIG REGISTERED LANDSCAPE ARCHITECT No. 981
04/18/2022

Scale			
Date			
Job No.			
Designed by			
Drawn by			
Checked by	No.	Description	Date
Approved by	REVISIONS		

THE WORKS — CAMBRIDGE DEPARTMENT OF PUBLIC

Client: CITY OF CAMBRIDGE, MA

Project: RIVER STREET
INFRASTRUCTURE AND STREETSCAPE PROJECT

Drawing: **ENLARGEMENT PLANS**

Sheet: L-3.07

Total Sheets: 381

File No.

Plotted: 4/14/2022 11:07:47 AM
File: C:\PWWORKING\EAST01\D1174456\7113XXX_LA(DESIGN)_L-3.00_ENLARGEMENT PLANS.DWG

SCULPTURAL SEATING LEGEND

SYM	TAG	DESCRIPTION	QTY
SMALL			
	C5.1	SMALL GRANITE SCULPTURAL SEAT	2
	C5	SMALL YELLOW SCULPTURAL SEAT	2
MEDIUM			
	C5.1	MEDIUM GRANITE SCULPTURAL SEAT	2
	C5	MEDIUM YELLOW SCULPTURAL SEAT	1
LARGE			
	C5.1	LARGE GRANITE SCULPTURAL SEAT	2

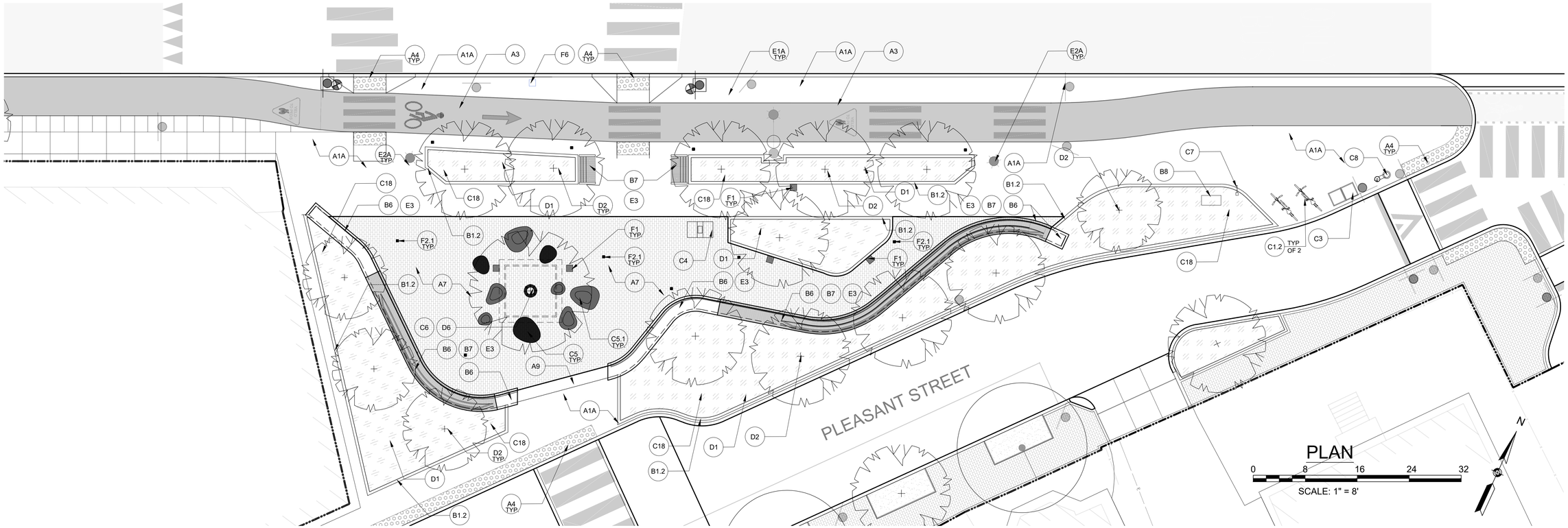

PLAN

0 8 16 24 32

SCALE: 1" = 8'

MATERIALS LEGEND

SYM	TAG	DESCRIPTION	DETAIL
		PAVING	
	A1	A. 4-INCH CEMENT CONCRETE SIDEWALKS: SEE CIVIL DRAWINGS FOR DETAILS B. 6-INCH CEMENT CONCRETE SIDEWALKS : SEE CIVIL DRAWINGS FOR DETAILS	1/L3.01
	A3	CYCLE TRACK- PERVIOUS OR NON-PERVIOUS - REFER TO CIVIL DRAWINGS FOR LOCATIONS AND DETAILS	
	A4	ACCESSIBLE CURB RAMP W/ DETECTABLE WARNING STRIP-REFER TO CIVIL DRAWINGS	
	A7	PRECAST UNIT PAVERS - PERMEABLE	4/L3.01 1/L4.50
	A9	FLUSH GRANITE PAVING BAND - TUBMAN	3/L4.50

TAG	DESCRIPTION	DETAIL
	CURBING AND WALLS	
B1.2	GRANITE PLANTER CURB - PLAZA	9/L3.01
B6	GRANITE SEAT WALL	4/L4.50 1/L4.51
B7	WOOD BENCH AT GRANITE SEAT WALL	1-5/L4.51 1-3/L4.52
B8	RELOCATED TUBMAN MONUMENT	5/L4.50
	SITE FURNISHINGS	
C1.2	BIKE RACK - TYPE 2	1/L3.03
C3	TRASH AND RECYCLING RECEPTACLE	3/L3.03

TAG	DESCRIPTION	DETAIL
C4	RITSUKO TAHO ART PIECES- REFER TO CIVIL DRAWINGS FOR DETAILS	
C5	SCULPTURAL SEATING FEATURE - REFER TO LEGEND FOR SIZING AND COLOR	
C5.1	SCULPTURAL GRANITE SEATING FEATURE - TUBMAN	
C6.1	PAVER TREE GRATE - 8'	1/L3.04
C7	RELOCATED TUBMAN SQUARE SIGN	2/L4.53
C8	WATER FILL STATION	4/L3.03
C18	RODENT CONTROL GEOTEXTILE	1,2,3-L3.05 5,8-L3.05

SYM	TAG	DESCRIPTION	DETAIL
		PLANTING	
	D1	PLANTING BED	2/L3.05 3/L3.05
	D2	TREE PLANTING	5/L3.05
	D6	TREE PLANTING - IN PERMEABLE PAVERS	1/L5.53
		LIGHTING - REFER TO ELECTRICAL AND STRUCTURAL DRAWINGS	
	E1A	LIGHT POLE - TYPE 1A - DECORATIVE PENDANT LIGHTING FIXTURE SINGLE POLE MOUNTED- REFER TO ELEC DRAWINGS	

SYM	TAG	DESCRIPTION	DETAIL
	E2A	LIGHT POLE -TYPE 2A- LED ACORN PEDESTRIAN LIGHT FIXTURE WITH CITY STANDARD BASE - REFER TO ELEC DRAWINGS	
	E3	BENCH UNDER LIGHTING-REFER TO ELEC DRAWINGS	
		DRAINAGE AND UTILITIES	
	F1	DRAIN INLET- REFER TO CIVIL DRAWINGS	
	F2.1	AERATION GRATE TYPE 1	2/L4.50
	F6	FIRE ALARM CALL BOX- REFER TO CIVIL DRAWINGS	

ISSUED FOR BID

HDR ENGINEERING, INC.
99 HIGH STREET, SUITE 2300
BOSTON, MASSACHUSETTS 02110–2378
(617) 357–7700

HALVORSON Tighe&Bond STUDIO
25 KINGSTON ST, BOSTON MA 02111-2200
(PHONE) 617.536.0380
WWW.HALVORSONDESIGN.COM

MASSACHUSETTS ROBERT UHLIG REGISTERED LANDSCAPE ARCHITECT No. 981
04/18/2022

Scale			
Date			
Job No.			
Designed by			
Drawn by			
Checked by	No.	Description	Date
Approved by	REVISIONS		

THE WORKS — CAMBRIDGE DEPARTMENT OF PUBLIC

Client	CITY OF CAMBRIDGE, MA
Project	RIVER STREET INFRASTRUCTURE AND STREETSCAPE PROJECT
Drawing	**TUBMAN SQUARE MATERIALS PLAN**
Sheet	L-4.00
Total Sheets	381
File No.	

File: C:\PWWORKINGIEAST01\D11744561713XXX_LA(DESIGN)_L-4.00 TUBMAN MATERIALS PLAN.DWG
Plotted: 4/14/2022 11:36:12 AM

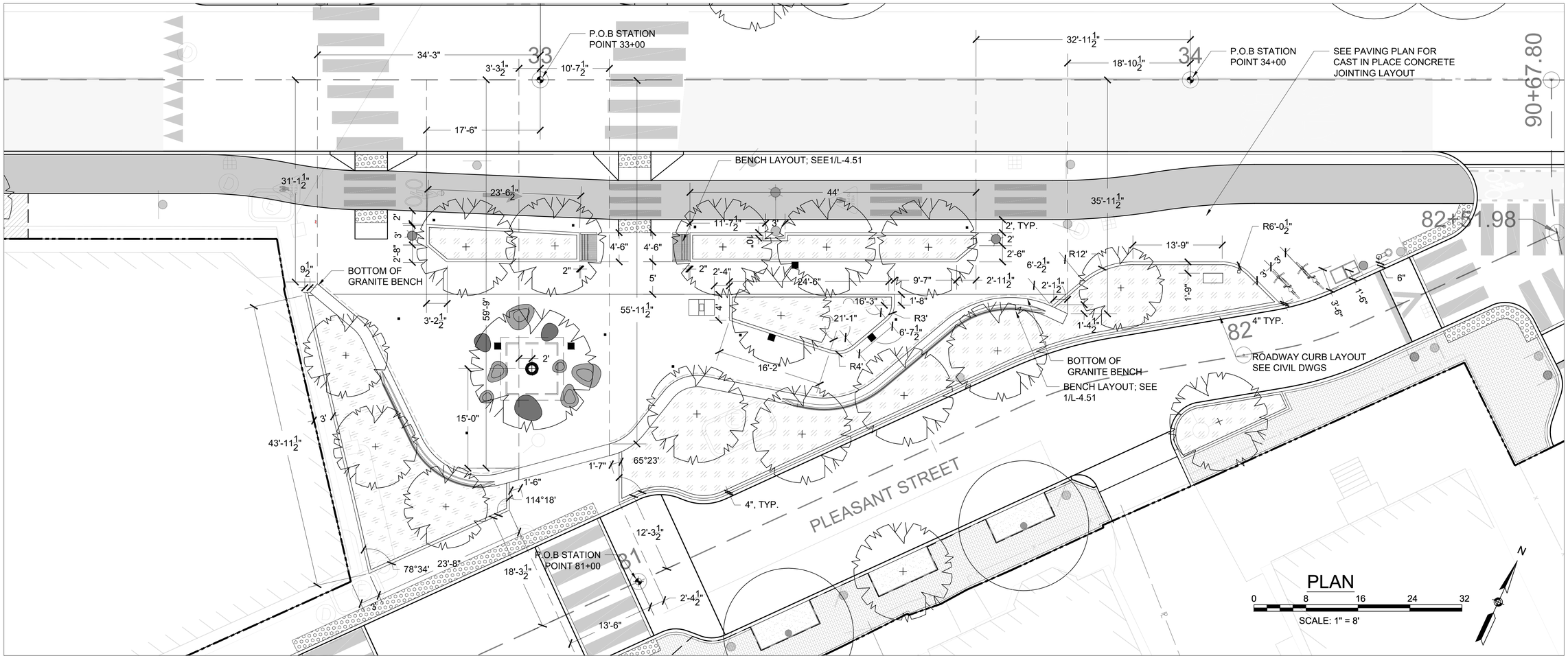

LAYOUT LEGEND

- ORIGIN POINT
- CP CENTER POINT
- CL CENTER LINE
- PT POINT OF TANGENCY
- ALIGN
- LAYOUT LINE

LAYOUT NOTES

1. EXISTING CONDITIONS BASED UPON FIELD SURVEY PROVIDED BY FELDMAN LAND SURVEYORS, BOSTON, MASSACHUSETTS.
2. EMPLOY LICENSED SURVEYOR OR REGISTERED CIVIL ENGINEER TO VERIFY AND LAYOUT GRADES, LINES AND DIMENSIONS. REPORT DISCREPANCIES TO OWNER'S REPRESENTATIVE PRIOR TO COMMENCING WORK.
3. LINES ARE PARALLEL OR PERPENDICULAR TO LINES FROM WHICH THEY ARE MEASURED, UNLESS OTHERWISE NOTED.
4. DIMENSIONS ARE TO WALL FACE, CURB FACE, PAVEMENT EDGE, EDGE OR CENTERLINE OF IMPROVEMENT OR AS OTHERWISE NOTED.
5. CONTRACTOR TO NOTIFY LANDSCAPE ARCHITECT OF ANY CONFLICTS WITH EXISTING SITE AMENITIES, FURNISHINGS, UTILITIES, OR ANY OTHER SITE ELEMENT NOT RECORDED ON THESE PLANS.
8. PROVIDE CONTINUOUS CONSTRUCTION JOINT WHEREVER EXTERIOR CONCRETE PAVING ABUTS BUILDING, CURBS, WALLS AND OTHER SITE IMPROVEMENTS.
9. REFER TO TUBMAN SQUARE PLANTING PLAN FOR AERATION LAYOUT INFORMATION.
10. SEE PAVING PLAN FOR PAVING LAYOUT INFORMATION.
11. LOCATIONS/ORIENTATION OF ALL DRAINS, ELECTRICAL BOXES, AND IRRIGATION BOXES MUST BE REVIEWED AND APPROVED IN THE FIELD, PRIOR TO INSTALLATION
12. CONTRACTOR TO STAKE LOCATIONS OF SCULPTURAL SEATING FEATURES IN THE FIELD FOR LANDSCAPE ARCHITECT TO REVIEW AND APPROVE FINAL LOCATIONS.
13. SEE CIVIL DWGS FOR ROADWAY CURB AND SEPARATED BIKE LANE LAYOUT.

ISSUED FOR BID

HDR ENGINEERING, INC.
99 HIGH STREET, SUITE 2300
BOSTON, MASSACHUSETTS 02110–2378
(617) 357–7700

HALVORSON Tighe&Bond STUDIO
25 KINGSTON ST, BOSTON MA 02111-2200
(PHONE) 617.536.0380
WWW.HALVORSONDESIGN.COM

MASSACHUSETTS ROBERT URLIG No. 981 REGISTERED LANDSCAPE ARCHITECT
04/18/2022

Scale			
Date			
Job No.			
Designed by			
Drawn by			
Checked by	No.	Description	Date
Approved by	REVISIONS		

CAMBRIDGE DEPARTMENT OF PUBLIC WORKS

Client	CITY OF CAMBRIDGE, MA	Sheet	L-4.10
Project	RIVER STREET INFRASTRUCTURE AND STREETSCAPE PROJECT	Total Sheets	381
Drawing	**TUBMAN SQUARE LAYOUT PLAN**	File No.	

Plotted: 4/14/2022 11:54:59 AM
File: C:\PWWORKING\EAST01\D1174456\7113XXX_LA(DESIGN)_L-4.10 TUBMAN LAYOUT PLAN.DWG

SEE SHEET L-1.04

SEE SHEET L-1.06

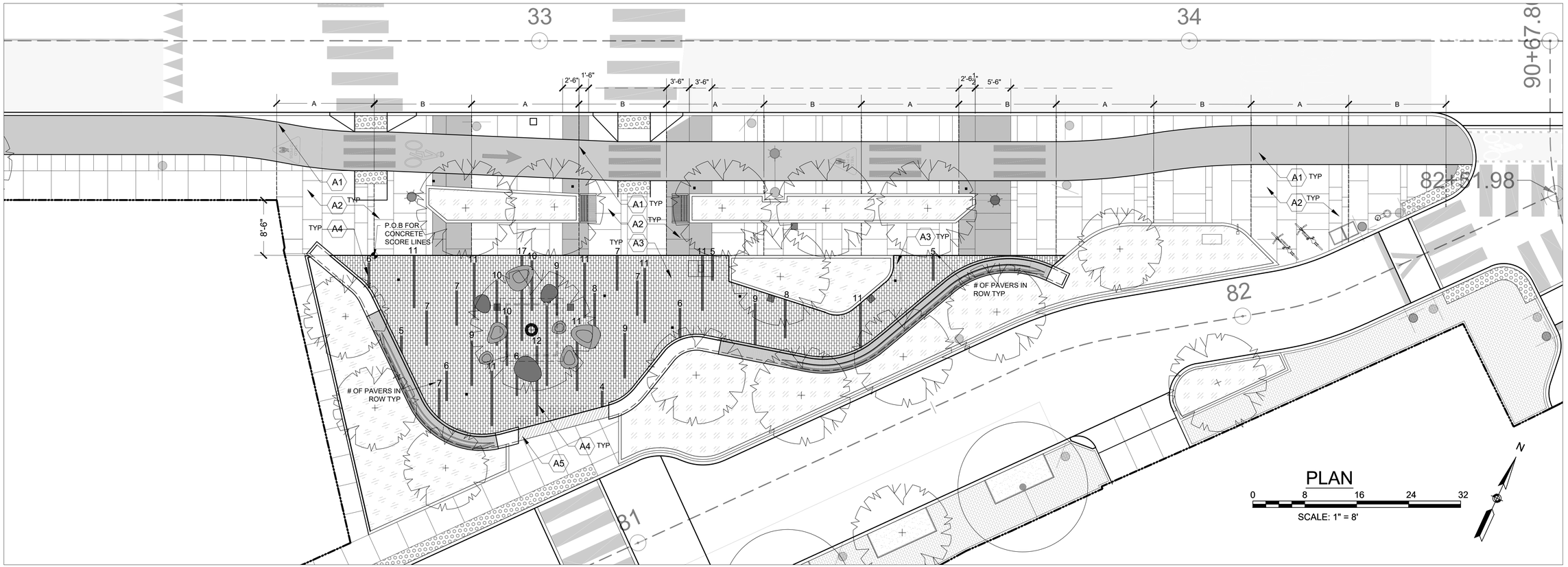

PAVING LEGEND

SYM.	DET.	DESCRIPTION
A1		PERVIOUS ASPHALT BIKE PATH
A2	1 L-4.20	CONCRETE PAVING
A3		PRECAST UNIT PAVERS - PERMEABLE - RUNNING BOND PAVER FIELD PAVER TYPE 1
A4		PRECAST UNIT PAVERS - PERMEABLE - SINGLE COURSE END TO END PAVER TYPE 2 - QTY OF PAVERS PER ROW NOTED ON PLAN
A5		FLSUH GRANITE PAVING BAND
		HACHTED AREAS INDICATE CUSTOM WIDTHS; REFER TO PLAN FOR DIMENSIONS

NOTES:

1. ⬡ SYM REFERS TO PAVING PATTERN ONLY. REFER TO MATERIALS LEGEND AND DETAILS FOR SUBGRADE AND BASE CONDITION
2. ◈ SYM REFERS TO POINT OF BEGINNING FOR PAVING PATTERN LAYOUT. ALIGN PAVING WITH SITE IMPROVEMENT AT THAT LOCATION. CUT PAVERS AS REQUIRED BETWEEN POINTS OF BEGINNING TO ACCOMODATE INCONSISTENCIES IN FINAL LAYOUT.
3. DIMENSIONS ARE TO WALL FACE, CURB FACE, PAVEMENT EDGE, EDGE OR CENTERLINE OF IMPROVEMENT OR AS OTHERWISE NOTED.
4. PAVING LAYOUT CONSTANTS:
   a. UNLESS OTHERWISE NOTED, PAVING PATTERN REPEATS ITSELF IN BOTH DIRECTIONS.
   b. PAVING JOINTS SHALL REMAIN PERPENDICULAR AND PARALLEL.
   c. ALIGN PAVING JOINTS TO OTHER OBJECTS AS INDICATED.
   d. DRAIN GRATES AND RIMS SHALL TIGHTLY ABUT ADJACENT CURBS, WALLS, BENCHES, EDGES, ETC.

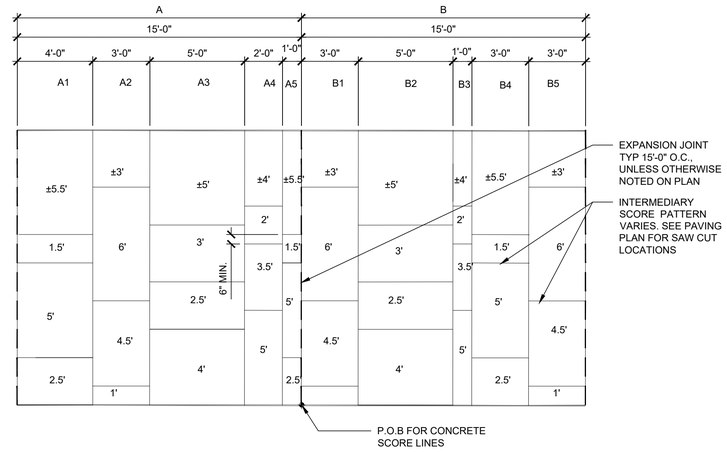

1 **PAVING ENLARGEMENT PLAN- SCORE LINES**

SCALE 1/4"=1'-0"

ISSUED FOR BID

HDR ENGINEERING, INC.
99 HIGH STREET, SUITE 2300
BOSTON, MASSACHUSETTS 02110–2378
(617) 357–7700

MASSACHUSETTS ROBERT URLIG REGISTERED LANDSCAPE ARCHITECT No. 981
04/18/2022

Scale			
Date			
Job No.			
Designed by			
Drawn by			
Checked by	No.	Description	Date
Approved by		REVISIONS	

THE WORKS — CAMBRIDGE DEPARTMENT OF PUBLIC WORKS

Client	CITY OF CAMBRIDGE, MA
Project	RIVER STREET INFRASTRUCTURE AND STREETSCAPE PROJECT
Drawing	**TUBMAN SQUARE PAVING PLAN**
Sheet	L-4.20
Total Sheets	381
File No.	

Plotted: 4/17/2022 7:48:45 AM
File: C:\PWWORKING\EAST01\D1174456\7113XXX_LA(DESIGN)_L-4.20 TUBMAN PAVING PLAN.DWG

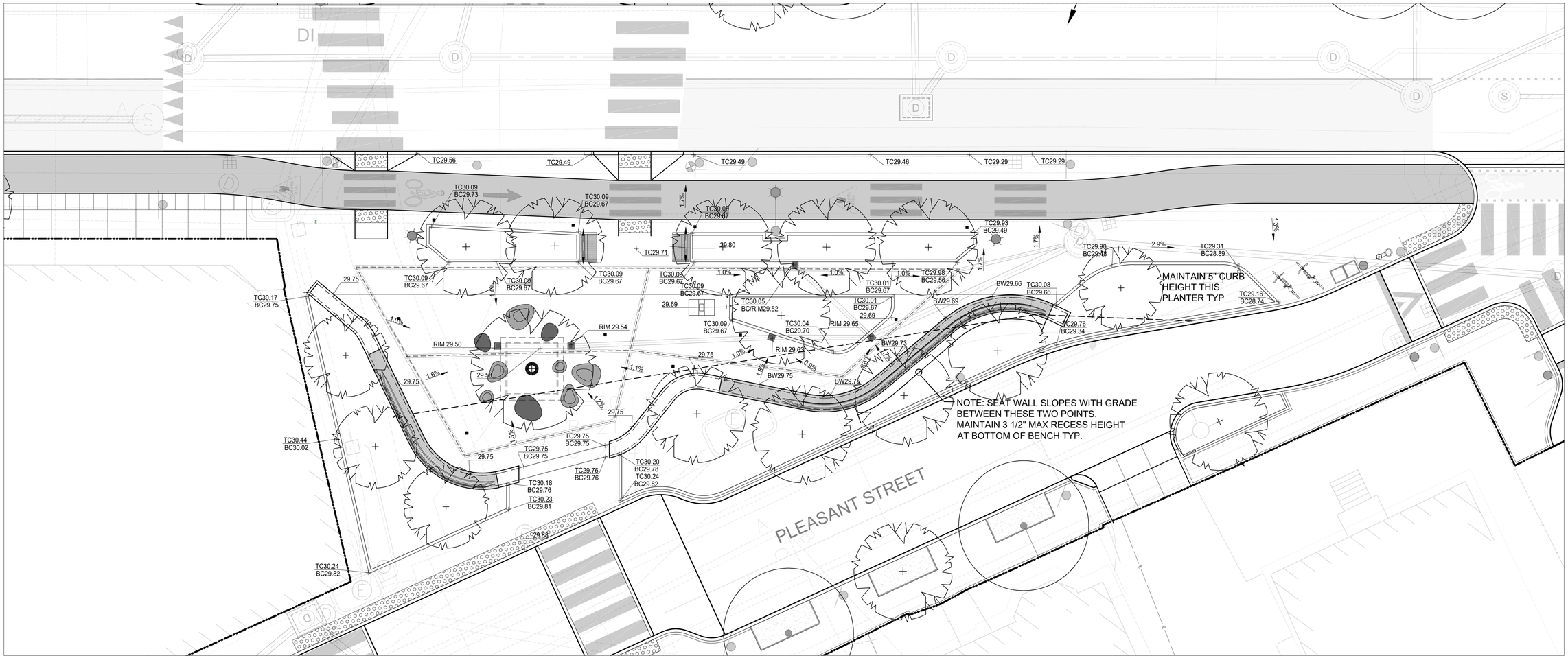

GRADING NOTES

1. EMPLOY A LICENSED SURVEYOR TO VERIFY AND LAYOUT GRADES, LINES AND DIMENSIONS SHOWN ON DRAWINGS. VERIFY EXISTING GRADES AND ELEVATIONS OF ADJACENT SITE CONDITIONS WITH ELEVATIONS ON DRAWINGS PRIOR TO BEGINNING WORK. IT IS THE RESPONSIBILITY OF THE CONTRACTOR TO REPORT DISCREPANCIES TO THE OWNER'S REPRESENTATIVE IMMEDIATELY AND RECEIVE WRITTEN INSTRUCTIONS PRIOR TO PROCEEDING WITH CONSTRUCTION.
2. SEE CIVIL DRAWINGS FOR GRADING OF ROADWAY TO BACK OF BIKE LANE, INCLUDING ALL ACCESSIBLE CURB RAMPS.
3. SEE CIVIL DRAWINGS FOR ROUTING, INVERTS, SIZING, CONNECTIONS, ETC. RELATED TO STORM SEWER DRAINS AND UNDERDRAINS BELOW PLANTING.
4. THE CONTRACTOR SHALL VERIFY EXISTING UTILITY LOCATIONS PRIOR TO EXCAVATION OF ANY TYPE.
5. EXCAVATE BY HAND IN CLOSE PROXIMITY TO EXISTING UTILITIES, STRUCTURES AND ITEMS TO REMAIN.
6. PLACE AND MAINTAIN WATER QUALITY AND EROSION CONTROL MEASURES AS REQUIRED TO COMPLY WITH REGULATING AUTHORITIES.
7. GRADE EVENLY BETWEEN SPOT GRADES AND CONTOURS AS NOTED.
8. RIM ELEVATIONS OF ANY NEW / EXISTING DRAINAGE AND UTILITY STRUCTURES SHALL BE FLUSH WITH SURROUNDING GRADES.
9. PITCH PAVEMENT TO PROVIDE POSITIVE DRAINAGE. PAVEMENT CROSS PITCH SHALL NOT BE GREATER THAN 1.9% OR LESS THAN 0.50%. NOTIFY LANDSCAPE ARCHITECT BEFORE PLACING: PAVEMENT OR BASE WITH PITCH 5% OR GREATER, OR 1% AND LESS; OR PAVEMENT WITH CROSS SLOPES GREATER THAN 2% OR LESS THAN 1%.
10. MATCH ALL EXISTING GRADES AT PROJECT LIMITS TO CREATE FLUSH SURFACE.

GRADING LEGEND

SYMBOL	DESCRIPTION
15	EXISTING CONTOUR
15	PROPOSED CONTOUR
(XX.XX)	MATCH EXISTING SPOT ELEVATION
+	PROPOSED SPOT ELEVATION
RIM	TOP OF DRAINAGE INLET
HP	HIGH POINT
EX	EXISTING GRADE TO REMAIN
TW	TOP OF WALL ELEVATION
BW	BOTTOM OF WALL ELEVATION
TC	TOP OF CURB ELEVATION
BC	BOTTOM OF CURB ELEVATION
- - - - -	SUBDRAIN LINE - REFER TO CIVIL DRAWINGS FOR INVERTS AND PIPE CONNECTIONS

PLAN

0 8 16 24 32

SCALE: 1" = 8'

N

ISSUED FOR BID

HDR ENGINEERING, INC.
99 HIGH STREET, SUITE 2300
BOSTON, MASSACHUSETTS 02110–2378
(617) 357–7700

HALVORSON Tighe&Bond STUDIO
25 KINGSTON ST, BOSTON MA 02111-2200
(PHONE) 617.536.0380
WWW.HALVORSONDESIGN.COM

MASSACHUSETTS ROBERT URLIB No. 981 REGISTERED LANDSCAPE ARCHITECT
04/18/2022

Scale			
Date			
Job No.			
Designed by			
Drawn by			
Checked by	No.	Description	Date
Approved by	REVISIONS		

THE WORKS — CAMBRIDGE DEPARTMENT OF PUBLIC

Client: CITY OF CAMBRIDGE, MA	Sheet: L-4.30
Project: RIVER STREET INFRASTRUCTURE AND STREETSCAPE PROJECT	Total Sheets: 381
Drawing: **TUBMAN SQUARE GRADING PLAN**	File No.

File: C:\PWWORKING\EAST01\D1174456\I7113XXX_LA(DESIGN)_L-4.30 TUBMAN GRADING PLAN.DWG Plotted: 4/14/2022 12:05:14 PM

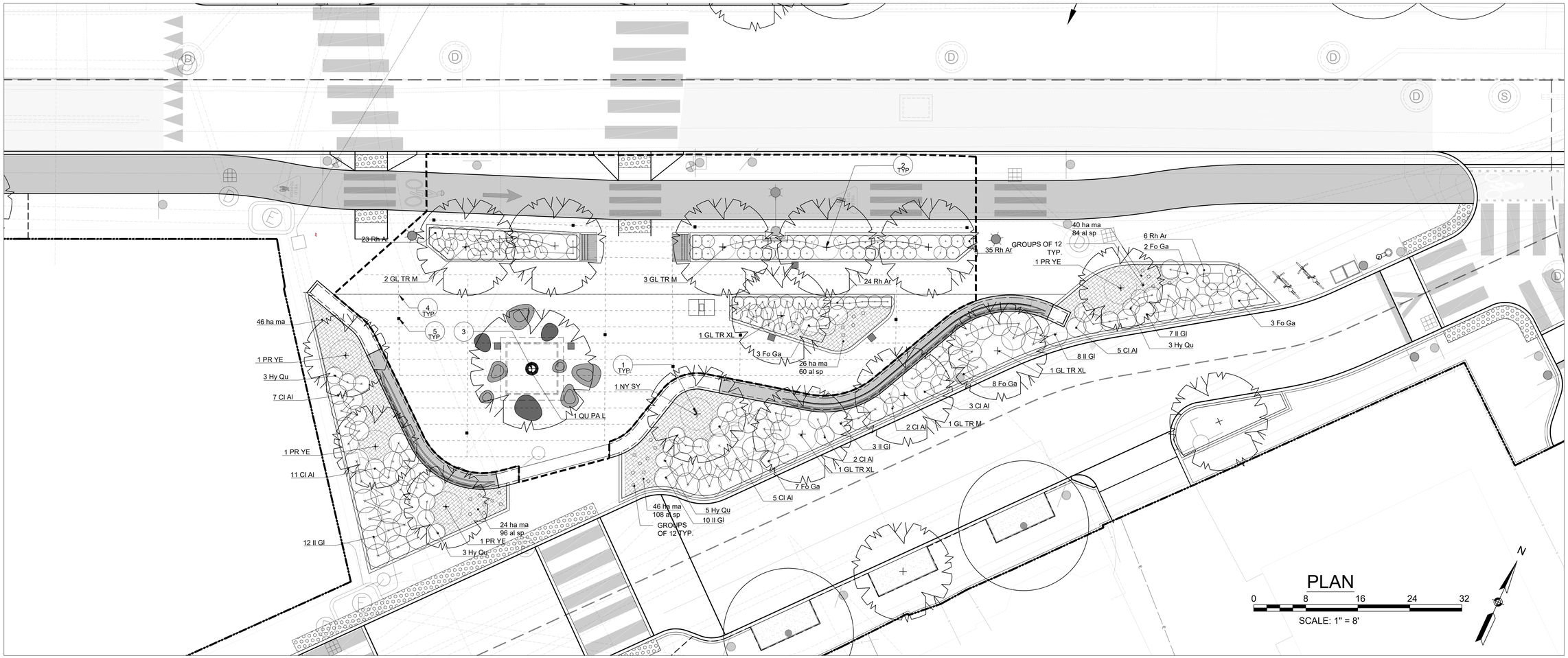

PLANTING NOTES

1. LANDSCAPE ARCHITECT TO APPROVE PLANT MATERIAL AT THE NURSERY AND AGAIN AT SITE PRIOR TO PLANTING.
2. PLANT MATERIAL SHALL CONFORM TO "THE AMERICAN STANDARD FOR NURSERY STOCK", PUBLISHED BY AMERICANHORT (WWW.AMERICANHORT.ORG).
3. NO SUBSTITUTIONS OF PLANT SPECIES WITHOUT LANDSCAPE ARCHITECT'S WRITTEN APPROVAL.
4. LOCATE AND VERIFY UTILITY LINE LOCATIONS PRIOR TO STAKING AND REPORT CONFLICT TO LANDSCAPE ARCHITECT.
5. PLANTING DEMOLITION DEBRIS, GARBAGE, LUMPS OF CONCRETE, STEEL AND OTHER MATERIALS DELETERIOUS TO PLANT'S HEALTH AS DETERMINED BY LANDSCAPE ARCHITECT SHALL BE REMOVED FROM ALL PLANTING AREAS.
6. NO PLANTING TO BE INSTALLED BEFORE ACCEPTANCE OF ROUGH GRADING.
7. ALL PROPOSED TREE LOCATIONS SHALL BE STAKED OR LAID OUT IN THEIR APPROXIMATE LOCATION BY THE CONTRACTOR. REFER TO LAYOUT AND PLANTING SHEETS FOR LAYOUT INFORMATION. THE CONTRACTOR SHALL ADJUST THE LOCATIONS AS REQUESTED BY THE LANDSCAPE ARCHITECT TO ACCOUNT FOR SUBSURFACE UTILITIES AND OTHER FIELD CONDITIONS. FINAL LOCATIONS OF ALL PLANTS MUST BE APPROVED BY THE LANDSCAPE ARCHITECT PRIOR TO PLANTING.
8. TOTAL QUANTITY OF PLANTS FOR EACH AREA TO BE AVAILABLE ON SITE AT THE TIME OF PLANTING FOR FIELD LAYOUT BY ENGINEER. NO PARTIAL LAYOUT AND PLANTING OF AREAS WILL BE ACCEPTABLE.
9. INSTALL PLANTS WITH ROOT FLARES FLUSH WITH FINISHED GRADE OR TOP OF STRUCTURAL SOIL. IMMEDIATELY REPLANT PLANTS THAT SETTLE OUT OF PLUMB OR BELOW FINISHED GRADE.
10. PLANT UNDER FULL TIME SUPERVISION OF CERTIFIED ARBORIST, NURSERYMAN, OR LICENSED LANDSCAPE ARCHITECT. PROVIDE WRITTEN VERIFICATION OF CERTIFICATION AND/OR LICENSE FOR LANDSCAPE ARCHITECT'S APPROVAL.
11. LOOSE OR CRACKED ROOT BALLS ARE UNACCEPTABLE.
12. DO NOT USE TREE WRAP.
13. REMOVE TOP 2/3 OF WIRE BASKETS. REMOVE TOP 1/3 OF BURLAP. SYNTHETIC BURLAP WILL NOT BE ACCEPTED. FOR CONTAINER PLANTS, REMOVE CONTAINER AND SCARIFY EDGES OF ROOT BALL 1/2" DEEP IN A MINIMUM OF FOUR LOCATIONS.
14. WATER PLANTS THOROUGHLY AFTER INSTALLATION, A MINIMUM OF TWICE WITHIN THE FIRST 24 HOURS.
15. RAISE AND REPLANT PLANTS THAT SETTLE AFTER PLANTING AND WATERING.

PLANTING LEGEND

TAG	DESCRIPTION	DETAIL
1	TREE PLANTING	4 / L3.05
2	TREE PLANTING - IN RAISED PLANTER	7 / L3.05
3	TREE PLANTING - IN PERMEABLE PAVERS	1 / L4.53
4	AERATION PIPE	3 / L4.50
5	AERATION GRATE - TYPE 1	3 / L4.50

PLANTING KEY

SYMBOL	DESCRIPTION
	EXISTING TREE TO REMAIN
	PROPOSED TREE
	LIMIT OF SAND BASED STRUCTURAL SOIL - SEE PERMEABLE PAVING AND PLANTING DETAILS
	AERATION PIPE WITH DRIP IRRIGATION - REFER TO IRRIGATION DRAWINGS
	AERATION GRATE - TYPE 1

NOTE

1. ALL PLANT BEDS WITHIN TUBMAN SQUARE TO RECEIVE XCLUDER GEO LANDSCAPE FABRIC FOR RODENT CONTROL. REFER TO DETAILS AND SPECIFICATIONS.

PLANT SCHEDULE

Symbol	Quantity	Botanical Name	Common Name	Size	Spacing
STREET TREES					
GL TR M	6	*Gleditsia triacanthos inermis 'Shademaster'*	Shademaster Honey Locust	4-4.5" caliper, B&B	See Plan
GL TR XL	3	*Gleditsia triacanthos inermis 'Shademaster'*	Shademaster Honey Locust	6-6.5" caliper, B&B	See Plan
NY SY	1	*Nyssa sylvatica 'Green Gable"*	Black Tupelo	5-5.5" caliper, B&B	See Plan
QU PA L	1	*Quercus palustris*	Pin Oak	6-6.5"caliper, B&B	See Plan
FLOWERING TREES					
PR YE	4	Prunus x yedoensis 'Akebono'	Akebono Cherry	5-5.5" caliper, B&B, Limbed up to 6'	See Plan
SHRUBS					
Rh Ar	88	*Rhus aromatica 'Gro-Low'*	Gro-Low Sumac	24-30" ht	30" O.C
Cl Al	35	*Clethra alnifolia 'Ruby Spice'*	Ruby Spice Summersweet	24-30" ht	30" O.C
Fo Ga	23	*Fothergilla major 'Mt Airy'*	Mt. Airy Fothergilla	24-30" ht	30" O.C
Hy Qu	14	*Hydrangea quercifolia 'Pee Wee'*	Pee Wee Oak Leaf Hydrangea	36-42" ht	36" O.C
Il Gl	40	*Ilex glabra 'Shamrock'*	Shamrock Inkberry	36-42" ht	36" O.C
GRASSES, GROUNDCOVER AND PERENNIALS					
al sp	348	*Allium sphaerocephalon*	Drumstick Allium	bulbs	18" O.C.
ha ma	182	*Hachonochloa macra*	Hakone Grass	2 gal	18" O.C.

ISSUED FOR BID

HDR ENGINEERING, INC.
99 HIGH STREET, SUITE 2300
BOSTON, MASSACHUSETTS 02110-2378
(617) 357-7700

HALVORSON Tighe&Bond STUDIO
25 KINGSTON ST, BOSTON MA 02111-2200
(PHONE) 617.536.0380
WWW.HALVORSONDESIGN.COM

MASSACHUSETTS ROBERT UHLIG No. 981 REGISTERED LANDSCAPE ARCHITECT
04/18/2022

Scale			
Date			
Job No.			
Designed by			
Drawn by			
Checked by	No.	Description	Date
Approved by	REVISIONS		

THE WORKS — CAMBRIDGE DEPARTMENT OF PUBLIC WORKS

Client: CITY OF CAMBRIDGE, MA
Project: RIVER STREET INFRASTRUCTURE AND STREETSCAPE PROJECT
Drawing: **TUBMAN SQUARE PLANTING PLAN**
Sheet: L-4.40
Total Sheets: 381
File No.

File: C:\PWWORKINGIEAST01\D1177456\7113XXX_LA(DESIGN)_L-4.40 TUBMAN PLANTING PLAN.DWG Plotted: 4/14/2022 12:11:13 PM

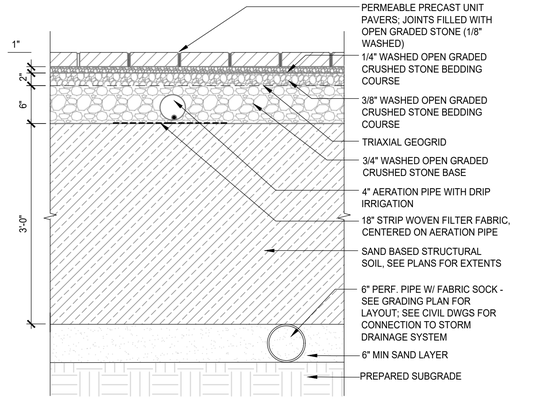

1 PRECAST UNIT PAVERS - PERMEABLE
SCALE 1"=1'-0"

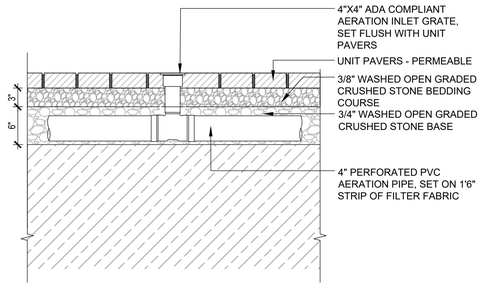

2 AERATION GRATE -TYPE 1
SCALE 1"=1'-0"

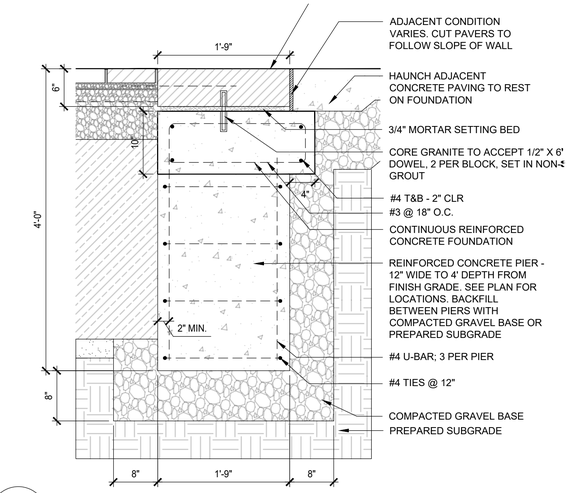

3 FLUSH GRANITE PAVING BAND
SCALE 1"=1'-0"

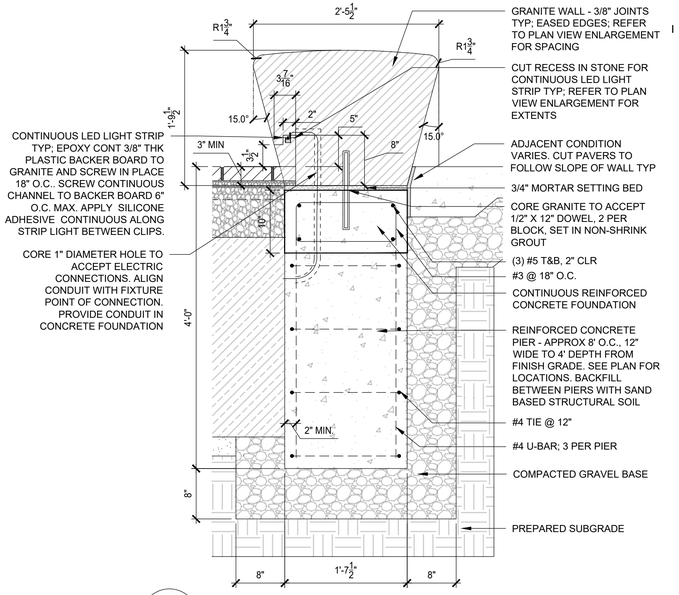

4 GRANITE SEAT WALL
SCALE 1"=1'-0"

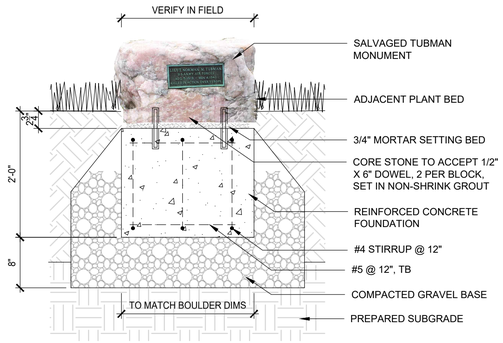

5 RELOCATED TUBMAN MONUMENT
SCALE 1"=1'-0"

ISSUED FOR BID

HDR ENGINEERING, INC.
99 HIGH STREET, SUITE 2300
BOSTON, MASSACHUSETTS 02110–2378
(617) 357–7700

HALVORSON Tighe&Bond STUDIO
25 KINGSTON ST, BOSTON MA 02111-2200
(PHONE) 617.536.0380
WWW.HALVORSONDESIGN.COM

MASSACHUSETTS ROBERT URLIG No. 981 REGISTERED LANDSCAPE ARCHITECT
04/18/2022

Scale			
Date			
Job No.			
Designed by			
Drawn by			
Checked by	No.	Description	Date
Approved by	REVISIONS		

THE WORKS — CAMBRIDGE DEPARTMENT OF PUBLIC WORKS

Client: CITY OF CAMBRIDGE, MA	Sheet: L-4.50
Project: RIVER STREET INFRASTRUCTURE AND STREETSCAPE PROJECT	Total Sheets: 381
Drawing: **TUBMAN SQUARE DETAILS**	File No.

Plotted: 4/14/2022 12:15:49 PM
File: C:\PWWORKING\EAST01\D1174456\7113XXX_LA(DESIGN)_L-4.50 TUBMAN SITE DETAILS.DWG

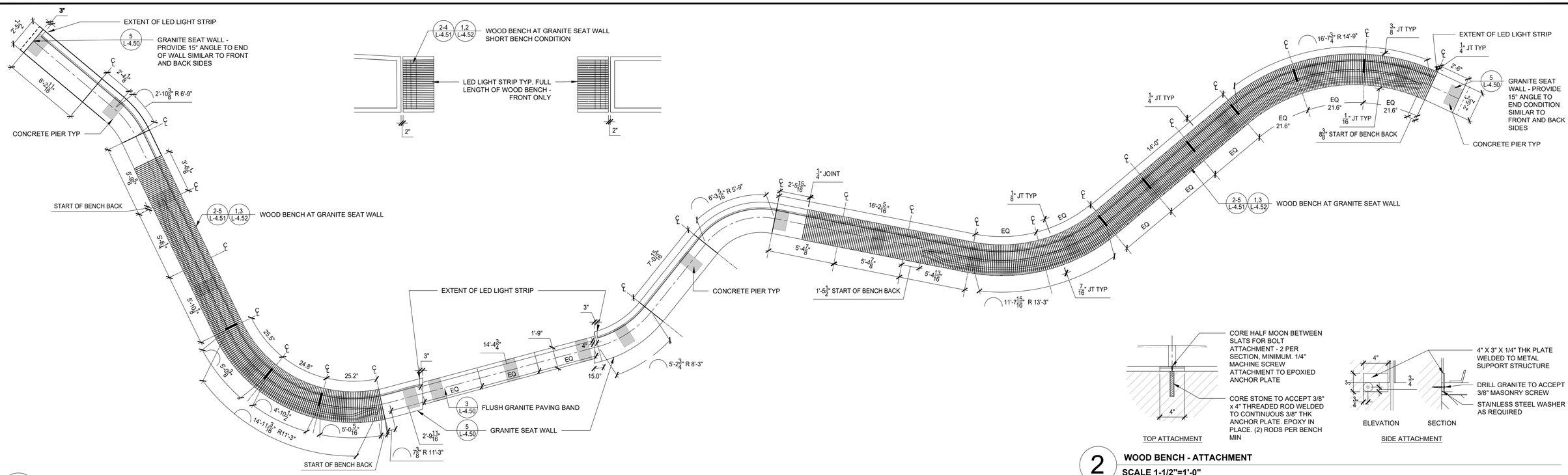

1 GRANITE SEAT WALL WITH WOOD BENCH - PLAN VIEW
SCALE 1/4"=1'-0"

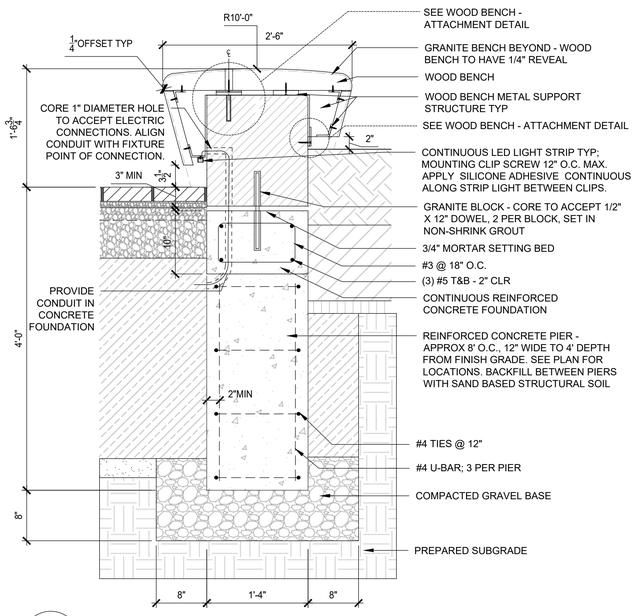

3 WOOD BENCH AT GRANITE SEAT WALL
SCALE 1"=1'-0"

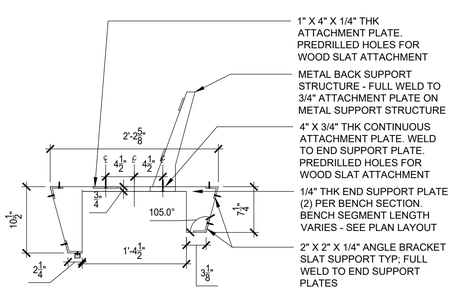

4 WOOD BENCH
SCALE 1"=1'-0"

2 WOOD BENCH - ATTACHMENT
SCALE 1-1/2"=1'-0"

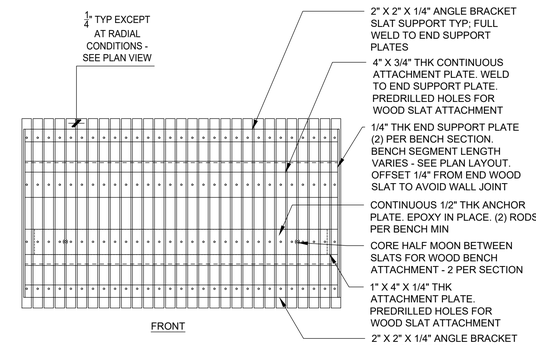

5 WOOD BENCH AT GRANITE SEATWALL TYPICAL PLAN ENLARGEMENT
SCALE 1"=1'-0"

ISSUED FOR BID

HDR ENGINEERING, INC.
99 HIGH STREET, SUITE 2300
BOSTON, MASSACHUSETTS 02110-2378
(617) 357-7700

HALVORSON Tighe&Bond STUDIO
25 KINGSTON ST, BOSTON MA 02111-2200
(PHONE) 617.536.0380
WWW.HALVORSONDESIGN.COM

MASSACHUSETTS ROBERT URLIG No. 981 REGISTERED LANDSCAPE ARCHITECT
04/18/2022

Scale			
Date			
Job No.			
Designed by			
Drawn by			
Checked by	No.	Description	Date
Approved by	REVISIONS		

THE WORKS — CAMBRIDGE DEPARTMENT OF PUBLIC WORKS

Client: CITY OF CAMBRIDGE, MA
Project: RIVER STREET INFRASTRUCTURE AND STREETSCAPE PROJECT
Drawing: **TUBMAN SQUARE DETAILS**
Sheet: L-4.51
Total Sheets: 381
File No.:

Plotted: 4/14/2022 12:15:59 PM
File: C:\PWWORKING\EAST01\D1174456\7113XXX_LA(DESIGN)_L-4.50 TUBMAN SITE DETAILS.DWG

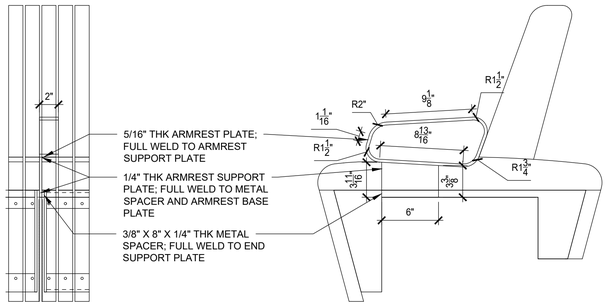

1 **WOOD BENCH - ARM REST**

SCALE 1-1/2"=1'-0"

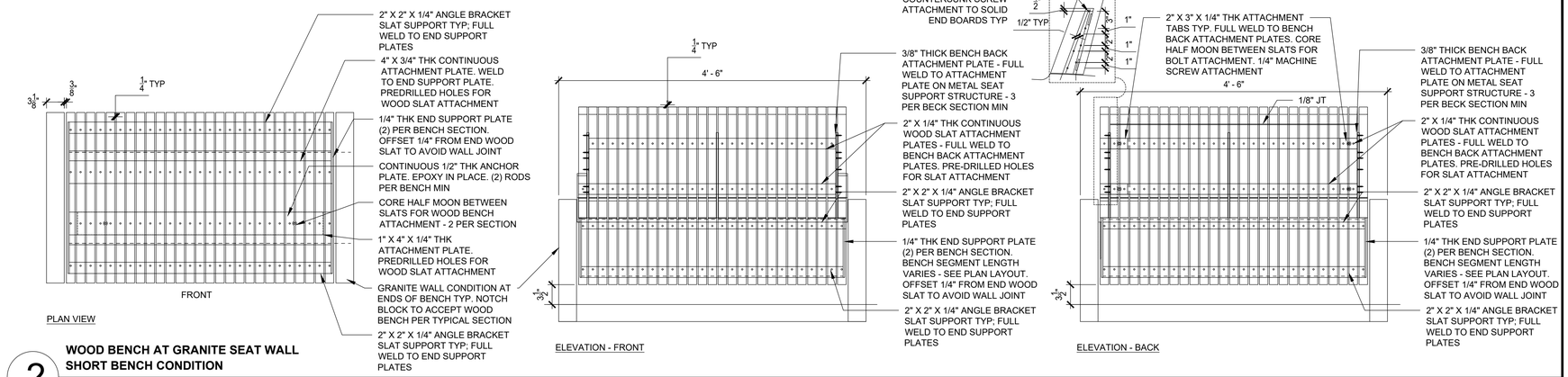

2 **WOOD BENCH AT GRANITE SEAT WALL SHORT BENCH CONDITION**

SCALE 1"=1'-0"

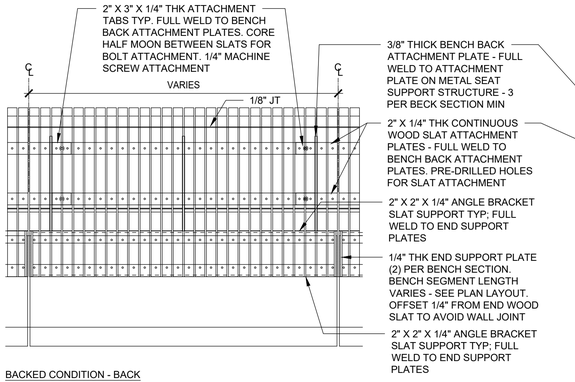

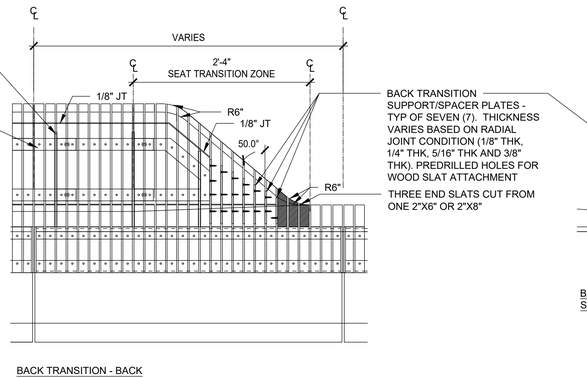

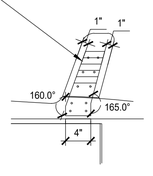

BACK TRANISITION SUPPORT/SPACER PLATES

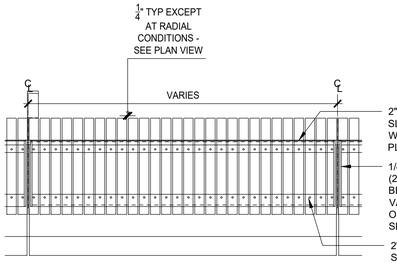

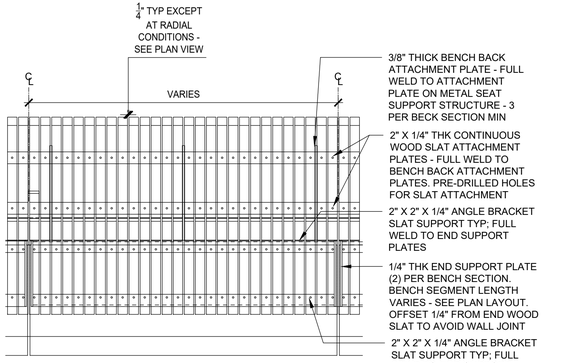

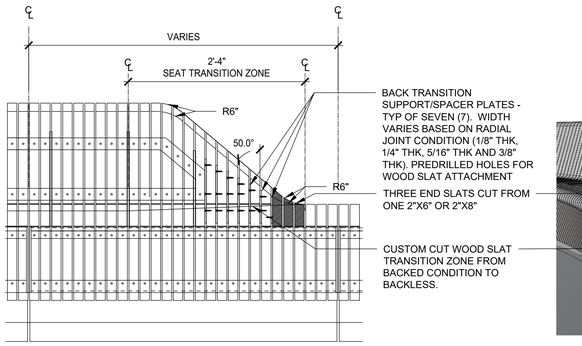

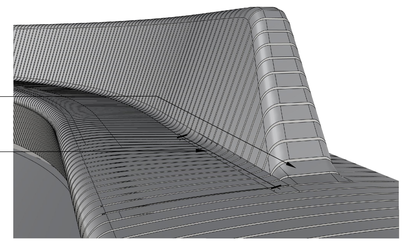

BACK TRANSITION AXON

3 **WOOD BENCH - ELEVATION**

SCALE 1"=1'-0"

ISSUED FOR BID

HDR ENGINEERING, INC.
99 HIGH STREET, SUITE 2300
BOSTON, MASSACHUSETTS 02110-2378
(617) 357-7700

HALVORSON Tighe&Bond STUDIO
25 KINGSTON ST, BOSTON MA 02111-2200
(PHONE) 617.536.0380
WWW.HALVORSONDESIGN.COM

MASSACHUSETTS ROBERT URLIB REGISTERED LANDSCAPE ARCHITECT No. 981
04/18/2022

Scale			
Date			
Job No.			
Designed by			
Drawn by			
Checked by	No.	Description	Date
Approved by	REVISIONS		

THE WORKS — CAMBRIDGE DEPARTMENT OF PUBLIC WORKS

Client: CITY OF CAMBRIDGE, MA	Sheet: L-4.52
Project: RIVER STREET INFRASTRUCTURE AND STREETSCAPE PROJECT	Total Sheets: 381
Drawing: **TUBMAN SQUARE DETAILS**	File No.

File: C:\PWWORKING\EAST01\D1174456\7113XXX_LA(DESIGN)_L-4.50 TUBMAN SITE DETAILS.DWG
Plotted: 4/14/2022 12:16:08 PM

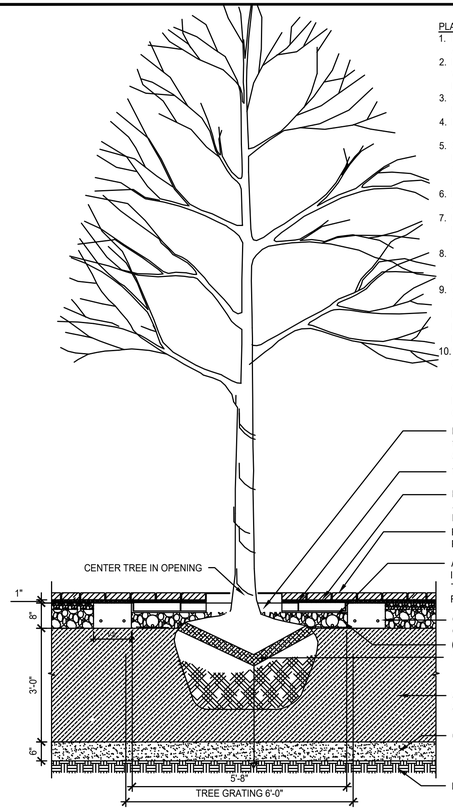

PLANTING NOTES:

1. REMOVE TOP 2/3 OF WIRE BASKETS AND BURLAP
2. LOOSE OR CRACKED ROOT BALLS WILL NOT BE ACCEPTED FOR PLANTING
3. SYNTHETIC BURLAP IS UNACCEPTABLE.
4. ROOT BALL SHALL SIT ON PREPARED SUBGRADE
5. SCARIFY SOILS CONTINUOUSLY TO A DEPTH OF 4" AT INTERFACE BETWEEN SOIL TYPES AND LIFTS TO PROMOTE BLENDING OF SOILS
6. FLOOD SAUCER TWICE DURING FIRST 24 HOURS AFTER PLANTING.
7. LIMB BRANCHES TO 7'-0" ABOVE FINISH GRADE TO PROVIDE CLEAR PEDESTRIAN ZONE
8. TREE SHALL HAVE STRAIGHT TRUNK AND SINGLE LEADER. DO NOT CUT LEADER
9. ORIENT TREE TO HAVE SIMILAR SOLAR ASPECT AS NURSERY OR AS DIRECTED BY LA. TAGS ARE TO BE PLACE ON THE NORTH SIDE AT THE NURSERY.
10. POUR PAVER GRATE CONCRETE COLLAR AFTER TREE AND AERATION TUBING INSTALLATION. INTERRUPT CONCRETE COLLAR AS REQUIRED FOR AERATION TUBING THROUGH COLOR

1 TREE PLANTING IN PERMEABLE PAVERS

SCALE 1/2"=1'-0"

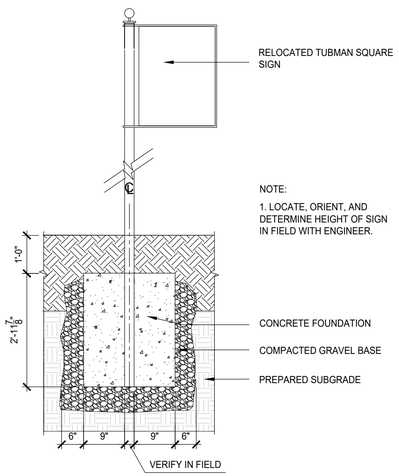

NOTE:

1. LOCATE, ORIENT, AND DETERMINE HEIGHT OF SIGN IN FIELD WITH ENGINEER.

2 RELOCATED TUBMAN SQUARE SIGN

SCALE 1/2"=1'-0"

NOTES:

1.SCULPTURAL GRANITE SEATING FEATURE SEAT TO BE FABRICATED PER THE CONTRACT DOCUMENTS USING 5 AXIS CNC EQUIPMENT IN ACCORDANCE WITH SHOP DRAWINGS AND APPROVED SAMPLES. FABRICATOR TO PREPARE 3D MODELS OF ALL SEATS IN ELECTRONIC RHINO FILE FORMAT TO PREPARE SHOP DRAWINGS. A DRAFT WORKING RHINO MODEL WILL BE PROVIDED FOR REFERENCE ONLY TO ILLUSTRATE DESIGN INTENT. WALLS TO BE IN STRICT ADHERENCE TO THE FABRICATORS APPROVED 3D MODEL WITH A HEIGHT AND WIDTH DIMENSIONAL TOLERANCE OF 1/16 IN. NO MODIFICATIONS TO THE FORMS WILL BE ACCEPTED WITHOUT PRIOR APPROVAL BY OWNER'S REPRESENTATIVE.

2. FOR GRANITE SEATING FEATURES IN CLOSE PROXIMITY TO TEH TREE, SET GRANITE BLOCK DIRECTLY ON PAVER TREE GRATE

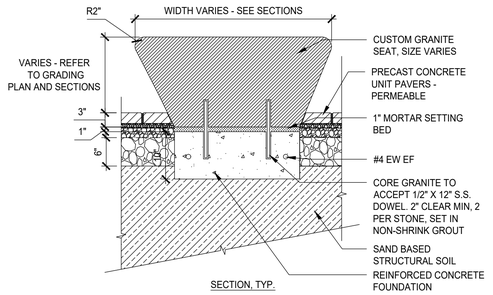

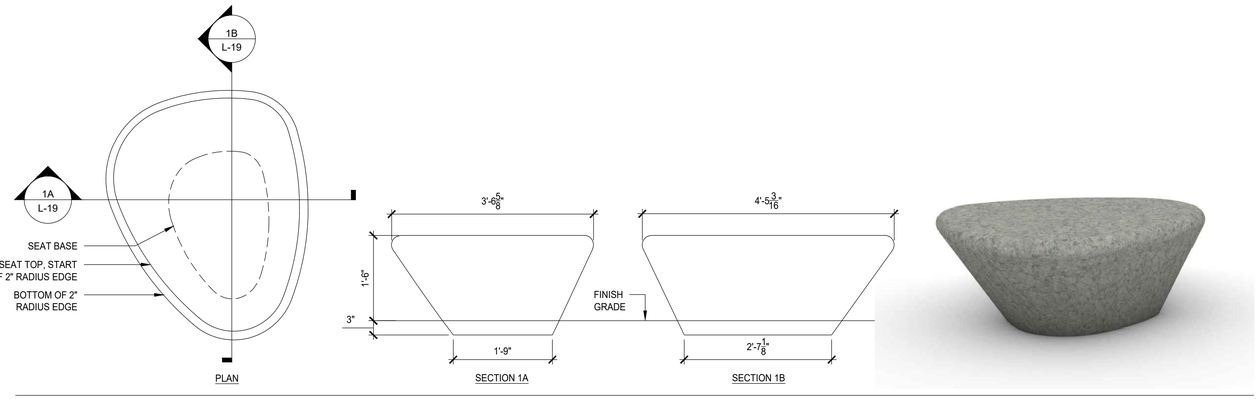

LARGE SEAT

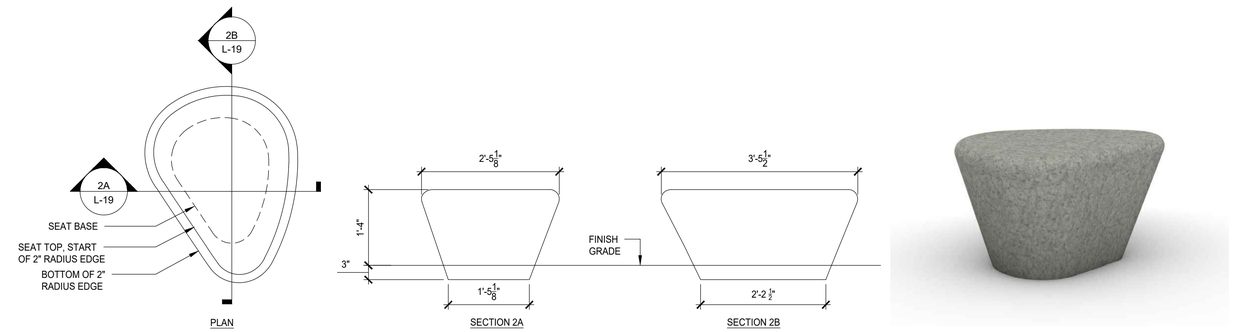

MEDIUM SEAT

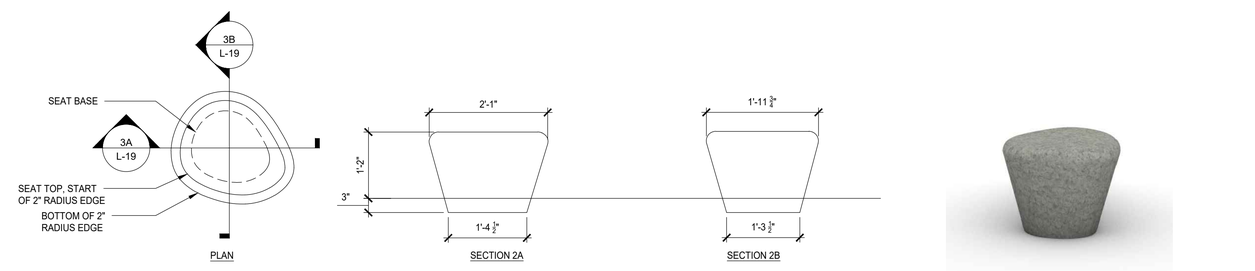

SMALL SEAT

3 SCULPTURAL GRANITE SEATING FEATURES

SCALE: 3/4" - 1'-0"

HDR ENGINEERING, INC.
99 HIGH STREET, SUITE 2300
BOSTON, MASSACHUSETTS 02110-2378
(617) 357-7700

HALVORSON Tighe&Bond STUDIO
25 KINGSTON ST, BOSTON MA 02111-2200
(PHONE) 617.536.0380
WWW.HALVORSONDESIGN.COM

MASSACHUSETTS ROBERT UHLIG REGISTERED LANDSCAPE ARCHITECT No. 981
04/18/2022

Scale			
Date			
Job No.			
Designed by			
Drawn by			
Checked by	No.	Description	Date
Approved by	REVISIONS		

ISSUED FOR BID

THE WORKS — CAMBRIDGE DEPARTMENT OF PUBLIC WORKS

Client: CITY OF CAMBRIDGE, MA	Sheet: L-4.53
Project: RIVER STREET INFRASTRUCTURE AND STREETSCAPE PROJECT	Total Sheets: 381
Drawing: **TUBMAN SQUARE DETAILS**	File No.

Plotted: 4/14/2022 12:16:19 PM
File: C:\PWWORKING\EAST01\D1174456\7113XXX_LA(DESIGN)_L-4.50 TUBMAN SITE DETAILS.DWG

File: D:\PROJECTS\HALVORSON\RIVER STREET\06-100% REV2\7113XXX_IRR RIVER STREET_100%_REV2.DWG Plotted: 3/28/2022 1:10:32 PM

IRRIGATION LEGEND

SYMBOL	PSI	SPACING	DESCRIPTION
G H V	30	15'	6-INCH POP UP SPRAY SPRINKLER W/ CHECK VALVE AND PRESS. REG.
	30	12'	
	30	10'	
	45	12"x12"	IN-LINE EMITTER DRIP TUBING, LANDSCAPE
	45	12"x36"	IN-LINE EMITTER DRIP TUBING, STRUCTURAL SOIL
	30	–	DEEP DRIP TREE STAKES WITH 2 GPH EMITTER FOUR STAKES PER TREE, SEE DETAILS
F			MANUAL FLUSHING VALVE
			1" 24 VOLT ELECTRIC ZONE VALVE (SEE VALVE DESIGNATOR FOR FLOW)
			1" 24 VOLT ELECTRIC ZONE VALVE W/ DISK FILTER (DRIP) (SEE VALVE DESIGNATOR FOR FLOW)
			1-INCH QUICK COUPLING VALVE
———			POLYETHYLENE LATERAL PIPING (SEE LATERAL PIPE SCHEDULE)
— - — - —			1-1/2" COPPER TUBE SIZE HDPE
— · — · —			2 INCH 4710 200 PSI IPS OD HIGH DENSITY POLYETHYLENE MAINLINE PIPE
= = = = =			4710 200 PSI IPS OD HIGH DENSITY POLYETHYLENE (SIDEWALKS AND DRIVEWAYS OR DUCTILEIRON (FOR ROADWAYS) SLEEVE. INSTALL SCH-40 PVC WIRE CONDUIT ADJACENT TO MAINLINE SLEEVES, MINIMUM 2"CONDUIT SEE SLEEVING DETAIL.

IRRIGATION LEGEND

R	AUTOMATIC RAIN SENSOR
MI	MOISTURE SENSOR
A B	AUTOMATIC CONTROLLER
M	IRRIGATION WATER METER IN WATER SUPPLY ENCLOSURE
B	BACK FLOW PREVENTION DEVICE IN WATER SUPPLY ENCLOSURE
LA	LIGHTNING ARRESTOR/GROUND
	MASTER VALVE
F	FLOW SENSOR

VALVE DESIGNATION:

A1 25 1"

- CONTROLLER LETTER
- STATION NUMBER
- FLOW
- VALVE SIZE

LATERAL PIPE SCHEDULE	
FLOW	PIPE SIZE / TYPE
0-12 GPM	1 INCH 100 PSI POLYETHYLENE
12-20 GPM	1-1/4 INCH 100 PSI POLYETHYLENE

IRRIGATION NOTES

1. COORDINATE FINAL LOCATION OF DRIP TUBING WITH FINAL APPROVED LANDSCAPE PLANTER LAYOUT.
2. PIPE AND VALVE LOCATIONS, ARE DIAGRAMMATIC, CONTRACTOR SHALL FIELD VERIFY.
3. INSTALL PIPING AS FAR FROM TREES AND ROOT BALLS AS POSSIBLE WHILE MAINTAINING DRIP TUBE SPACING.
4. TWO-WIRE COMMUNICATION CABLE FROM CONTROLLER TO VALVES /DECODERS SHALL BE POLYETHYLENE DOUBLE JACKETED TWO CONDUCTOR SOLID CORE, DESIGNED FOR DIRECT BURIAL. SUFFICIENT SLACK SHOULD BE LEFT IN COMMUNICATION CABLE AT DECODER LOCATIONS TO BRING DECODERS AND SPLICES ABOVE GRADE.
5. QUICK COUPLING VALVES SHALL BE INSTALLED ON 1 INCH PVC SWING JOINTS WITH BRASS INSERTS AND STABILIZERS. (SEE DETAIL).
6. IRRIGATION SYSTEMS ARE DESIGNED FOR SEPARATE WATER SUPPLIES TO PROVIDE 20 GPM FROM NEW 1 INCH SERVICES. SYSTEM TO PRODUCE 65-PSI DYNAMIC PRESSURE DOWNSTREAM OF THE BACKFLOW PREVENTERS AT CONTRACTOR'S POINTS OF CONNECTION.
7. CONTRACTOR SHALL TEST DYNAMIC PRESSURE BEFORE STARTING WORK, REPORT ANY DEVIATION FROM PRESSURE REQUIRED TO OWNER'S REPRESENTATIVE BEFORE CONTINUING.
9. INSTALL CONTROLLERS IN ENCLOSURES WITH GUARD, AS DIRECTED BY OWNER'S REPRESENTATIVE, HARD WIRE TO 120 VOLT, DEDICATED POWER SUPPLIES. ROUTE COMMUNICATION CABLE TO CONTROLLERS VIA CONDUIT THROUGH ENCLOSURE BASES.
9. INSTALL RAIN SENSORS ON CONTROLLER ENCLOSURES, ROUTE WIRE TO CONTROLLERS THROUGH BASES.
10. ABOVE GROUND WIRING SHALL BE INSTALLED IN PVC CONDUIT.

IRRIGATION NOTES

11. COORDINATE LOCATION OF EXISTING AND FUTURE UTILITIES ON SITE AND CONTACT PROPER AUTHORITIES AND UTILITY COMPANIES BEFORE THE START OF WORK.
12. IN-LINE DRIP TUBING TO BE INSTALLED 6" FROM MASONRY WALLS, PLANTER SIDE WALLS, AND CURBING, ON A 12" CENTER TO CENTER ROW SPACING IN LANDSCAPE AREAS AND 36" SPACING IN STRUCTURAL SOIL AREAS.
13. FLUSH LATERAL LINES BEFORE INSTALLING IN-LINE DRIP TUBING.
14. STAKE IN-LINE DRIP TUBING AT MINIMUM 5 FOOT INTERVALS TO PREVENT MOVEMENT.
15. IN-LINE DRIP TUBING TO BE INSTALLED 2-4" BELOW GRADE UNDER MULCH. NO DRIP TUBING SHALL BE VISIBLE.
16. INSTALL MANUAL FLUSH PORTS AT LOWEST POINT OF EXHAUST HEADER, AT THE END OF EACH DRIP ZONE, APPROXIMATELY WHERE SHOWN ON DRAWINGS.
17. CONTRACTOR MUST SUBMIT SHOP DRAWINGS AS PER THE WRITTEN SPECIFICATIONS TO THE OWNER'S REPRESENTATIVE FOR APPROVAL PRIOR TO ORDERING MATERIAL AND BEGINNING WORK.
18. MATERIAL SUBSTITUTIONS WHICH VARY FROM THE SPECIFIED PRODUCTS MUST BE SUBMITTED TO THE OWNER'S REPRESENTATIVE FOR APPROVAL AS PART OF THE SUBMITTAL PROCESS.
19. ONCE APPROVED SUBMITTALS HAVE BEEN RETURNED TO THE CONTRACTOR, WORK MAY BEGIN. THE OWNER'S REPRESENTATIVE MUST BE NOTIFIED A MINIMUM OF 7-DAYS IN ADVANCE OF THE START OF WORK TO COORDINATE ON-SITE SUPERVISION AND ADMINISTRATION.
20. SEE IRRIGATION DETAILS AND SPECIFICATIONS SECTION 328400 FOR ADDITIONAL INFORMATION.

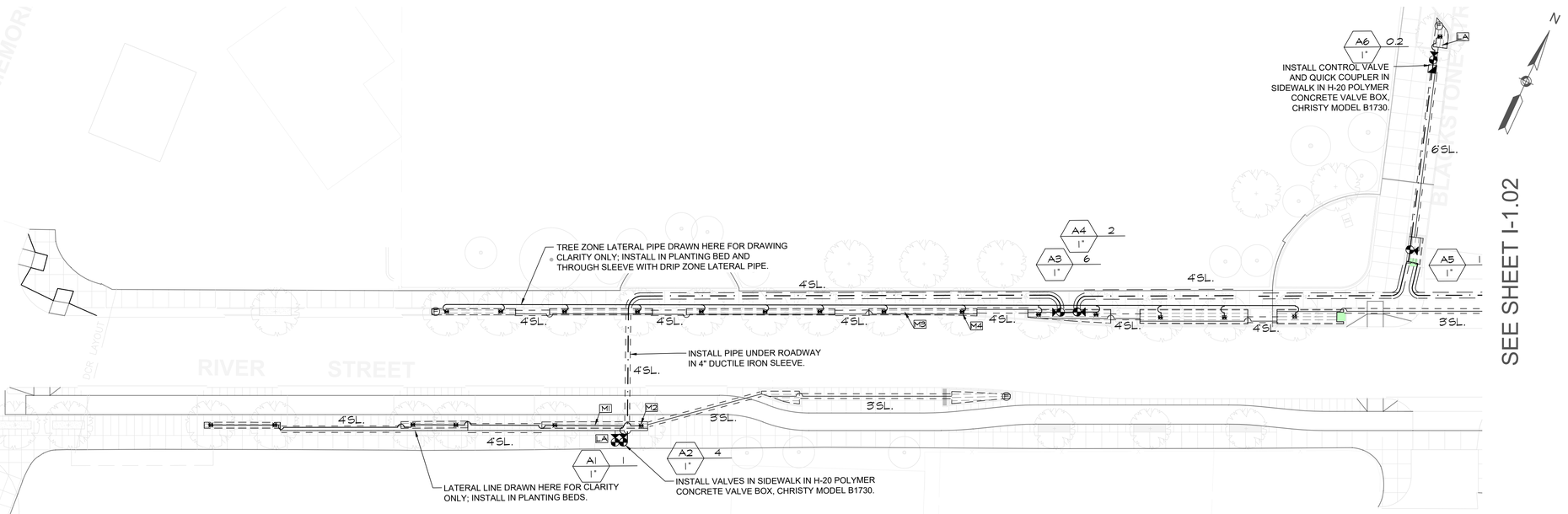

PLAN

20

SCALE: 1" = 20'

Irrigation Consulting, Inc.
Providing innovative design solutions for irrigation worldwide.
20 Merrit Parkway
Nashua, NH 03063
(978) 433.8472
112 S. Old Statesville Rd., Suite 109
Huntersville, NC 28078
(704) 843.3688
www.irrigationconsulting.com

ISSUED FOR BID

HDR ENGINEERING, INC.
99 HIGH STREET, SUITE 2300
BOSTON, MASSACHUSETTS 02110–2378
(617) 357–7700

HALVORSON Tighe&Bond STUDIO
25 KINGSTON ST, BOSTON MA 02111-2200
(PHONE) 617.536.0380
WWW.HALVORSONDESIGN.COM

Scale			
Date			
Job No.			
Designed by			
Drawn by			
Checked by	No.	Description	Date
Approved by	REVISIONS		

CAMBRIDGE DEPARTMENT OF PUBLIC WORKS

Client: CITY OF CAMBRIDGE, MA	Sheet: I1.01
Project: RIVER STREET INFRASTRUCTURE AND STREETSCAPE PROJECT	Total Sheets: 381
Drawing: **IRRIGATION PLAN-1**	File No.

File: D:\PROJECTS\HALVORSONRIVER STREET\06-100% REV2\7113XXX_IRR RIVER STREET_100%_REV2.DWG Plotted: 3/28/2022 1:19:08 PM

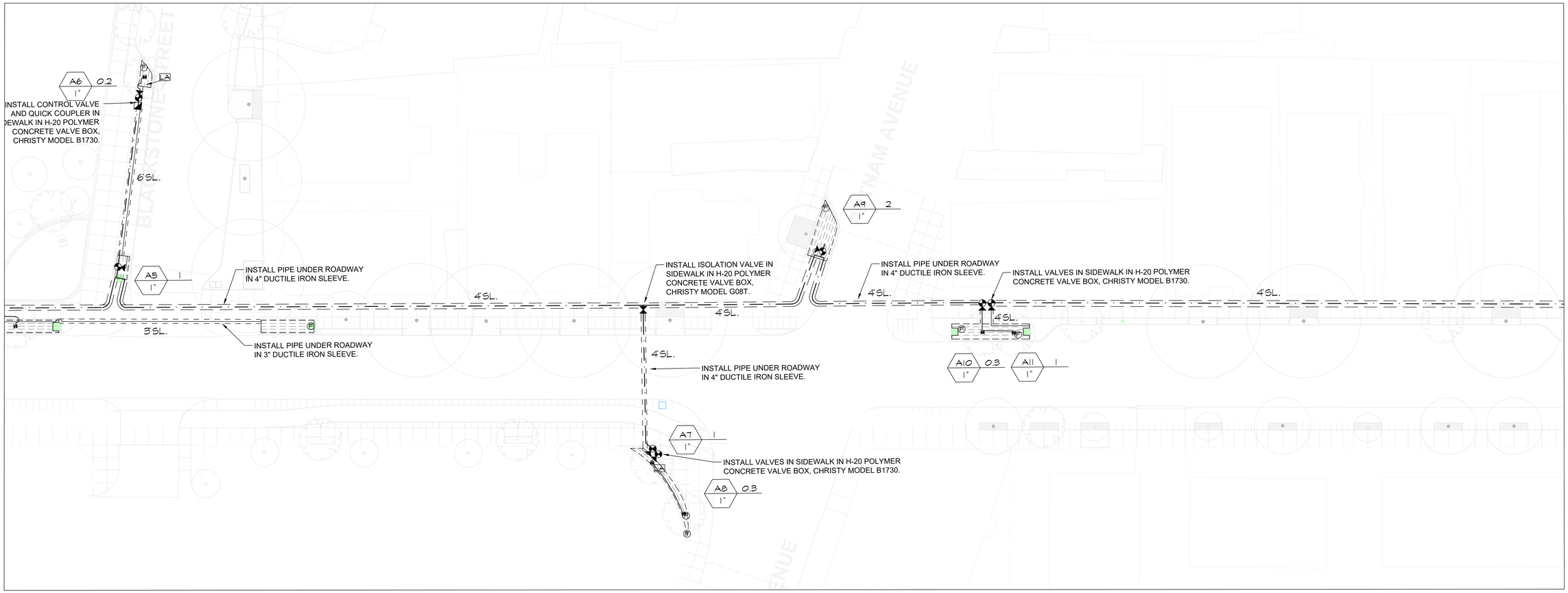

PLAN

0 20 50 100

SCALE: 1" = 20'

Irrigation Consulting, Inc.
Providing innovative design solutions for irrigation worldwide.
20 Merrit Parkway
Nashua, NH 03062
(978) 433.8912
112 S. Old Statesville Rd., Suite 109
Huntersville, NC 28078
(704) 849.3688
www.irrigationconsulting.com

ISSUED FOR BID

HDR ENGINEERING, INC.
99 HIGH STREET, SUITE 2300
BOSTON, MASSACHUSETTS 02110-2378
(617) 357-7700

HALVORSON Tighe&Bond STUDIO
25 KINGSTON ST, BOSTON MA 02111-2200
(PHONE) 617.536.0380
WWW.HALVORSONDESIGN.COM

Scale			
Date			
Job No.			
Designed by			
Drawn by			
Checked by	No.	Description	Date
Approved by	REVISIONS		

THE WORKS — CAMBRIDGE DEPARTMENT OF PUBLIC

Client: CITY OF CAMBRIDGE, MA	Sheet: I-1.02
Project: RIVER STREET INFRASTRUCTURE AND STREETSCAPE PROJECT	Total Sheets: 381
Drawing: **IRRIGATION PLAN-2**	File No.

STREET_100%_REV2.DWG Plotted: 3/28/2022 1:19:55 PM

File: D:\PROJECTS\HALVORSONRIVER STREET\06-100% REV2\7113XXX_IRR RIVER

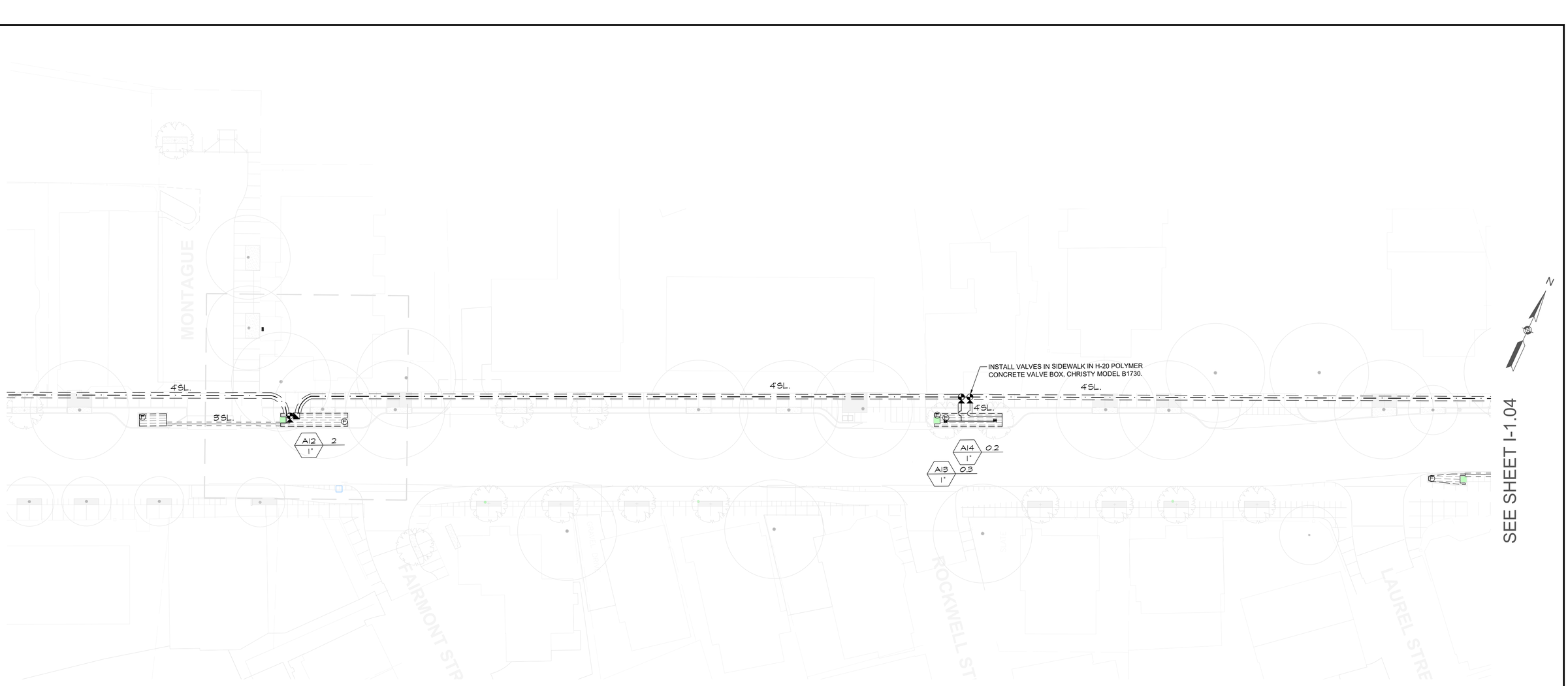

SEE SHEET I-1.02

SEE SHEET I-1.04

PLAN

0 20 50 100

SCALE: 1" = 20'

Irrigation Consulting, Inc.
Providing innovative design solutions for irrigation worldwide.
20 Merrit Parkway
Nashua, NH 03062
(978) 433.8912

112 S. Old Statesville Rd., Suite 109
Huntersville, NC 28078
(704) 843.3688

www.irrigationconsulting.com

ISSUED FOR BID

HDR ENGINEERING, INC.
99 HIGH STREET, SUITE 2300
BOSTON, MASSACHUSETTS 02110-2378
(617) 357-7700

HALVORSON Tighe&Bond STUDIO
25 KINGSTON ST, BOSTON MA 02111-2200
(PHONE) 617.536.0380
WWW.HALVORSONDESIGN.COM

Scale			
Date			
Job No.			
Designed by			
Drawn by			
Checked by	No.	Description	Date
Approved by	REVISIONS		

CAMBRIDGE DEPARTMENT OF PUBLIC WORKS

Client: CITY OF CAMBRIDGE, MA	Sheet: L-1.03
Project: RIVER STREET INFRASTRUCTURE AND STREETSCAPE PROJECT	Total Sheets: 381
Drawing: **IRRIGATION PLAN-3**	File No.

File: D:\PROJECTS\HALVORSON\RIVER STREET\06-100% REV2\7113XXX_IRR RIVER STREET_100%_REV2.DWG Plotted: 3/28/2022 1:53:46 PM

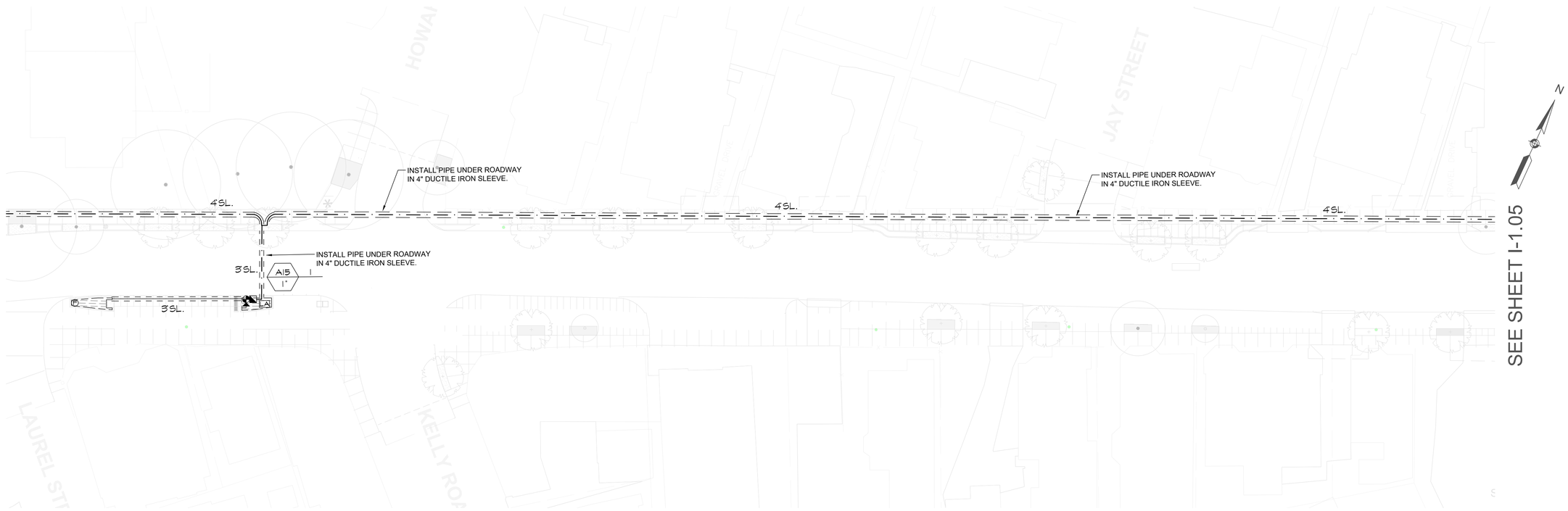

PLAN

0 20 50 100

SCALE: 1" = 20'

Irrigation Consulting, Inc.
Providing innovative design solutions for irrigation worldwide.

20 Merrit Parkway
Nashua, NH 03062
(978) 433.8972

112 S. Old Statesville Rd., Suite 109
Huntersville, NC 28078
(704) 843.3688

www.irrigationconsulting.com

ISSUED FOR BID

HDR ENGINEERING, INC.
99 HIGH STREET, SUITE 2300
BOSTON, MASSACHUSETTS 02110–2378
(617) 357–7700

HALVORSON Tighe&Bond STUDIO
25 KINGSTON ST, BOSTON MA 02111-2200
(PHONE) 617.536.0380
WWW.HALVORSONDESIGN.COM

Scale			
Date			
Job No.			
Designed by			
Drawn by			
Checked by	No.	Description	Date
Approved by	REVISIONS		

THE WORKS — CAMBRIDGE DEPARTMENT OF PUBLIC WORKS

Client: CITY OF CAMBRIDGE, MA	Sheet: I-1.04
Project: RIVER STREET INFRASTRUCTURE AND STREETSCAPE PROJECT	Total Sheets: 381
Drawing: **IRRIGATION PLAN-4**	File No.

STREET_100%_REV3.DWG Plotted: 4/7/2022 3:49:23 PM
File: D:\PROJECTS\HALVORSON\RIVER STREET\07-100% REV3\7113XXX_IRR RIVER

SEE SHEET I-1.04

SEE SHEET I-1.06

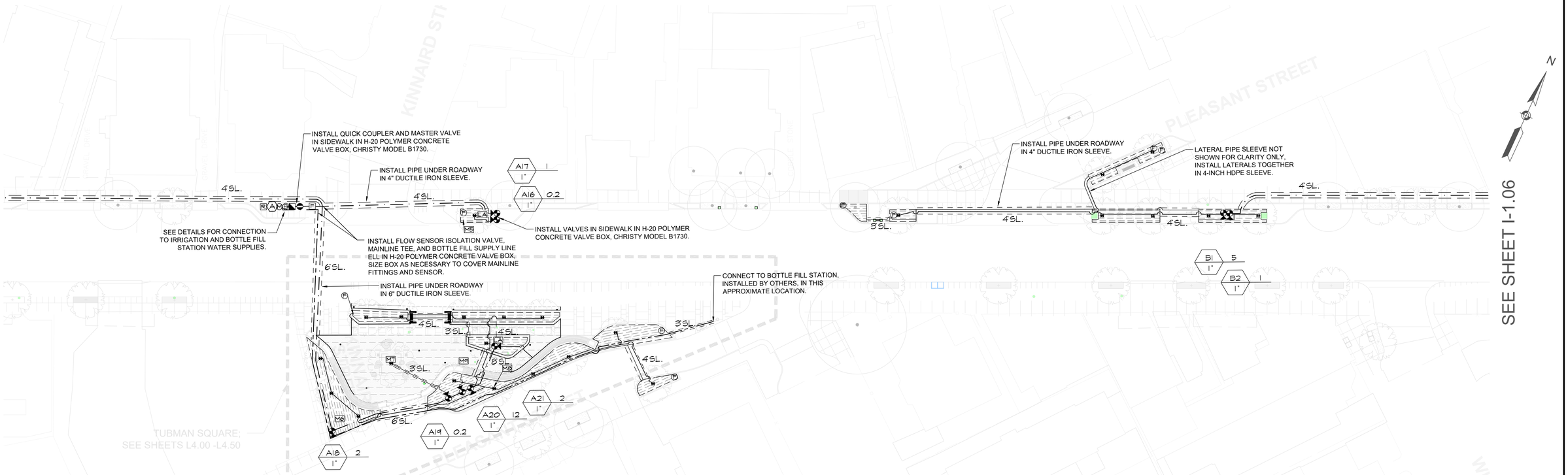

PLAN

0 20 50 100

SCALE: 1" = 20'

ISSUED FOR BID

Irrigation Consulting, Inc.
Providing innovative design solutions for irrigation worldwide.
20 Merrit Parkway
Nashua, NH 03062
(978) 433.8472
112 S. Old Statesville Rd., Suite 109
Huntersville, NC 28078
(704) 843.3688
www.irrigationconsulting.com

HDR ENGINEERING, INC.
99 HIGH STREET, SUITE 2300
BOSTON, MASSACHUSETTS 02110–2378
(617) 357–7700

HALVORSON Tighe&Bond STUDIO
25 KINGSTON ST, BOSTON MA 02111-2200
(PHONE) 617.536.0380
WWW.HALVORSONDESIGN.COM

Scale			
Date			
Job No.			
Designed by			
Drawn by			
Checked by	No.	Description	Date
Approved by	REVISIONS		

CAMBRIDGE DEPARTMENT OF PUBLIC WORKS

Client	CITY OF CAMBRIDGE, MA	Sheet	I-1.05
Project	RIVER STREET INFRASTRUCTURE AND STREETSCAPE PROJECT	Total Sheets	381
Drawing	**IRRIGATION PLAN-5**	File No.	

File: D:\PROJECTS\HALVORSON\RIVER STREET\06-100% REV2\7113XXX_IRR RIVER STREET_ 100%_REV2.DWG Plotted: 3/28/2022 1:55:16 PM

SEE SHEET I-1.05

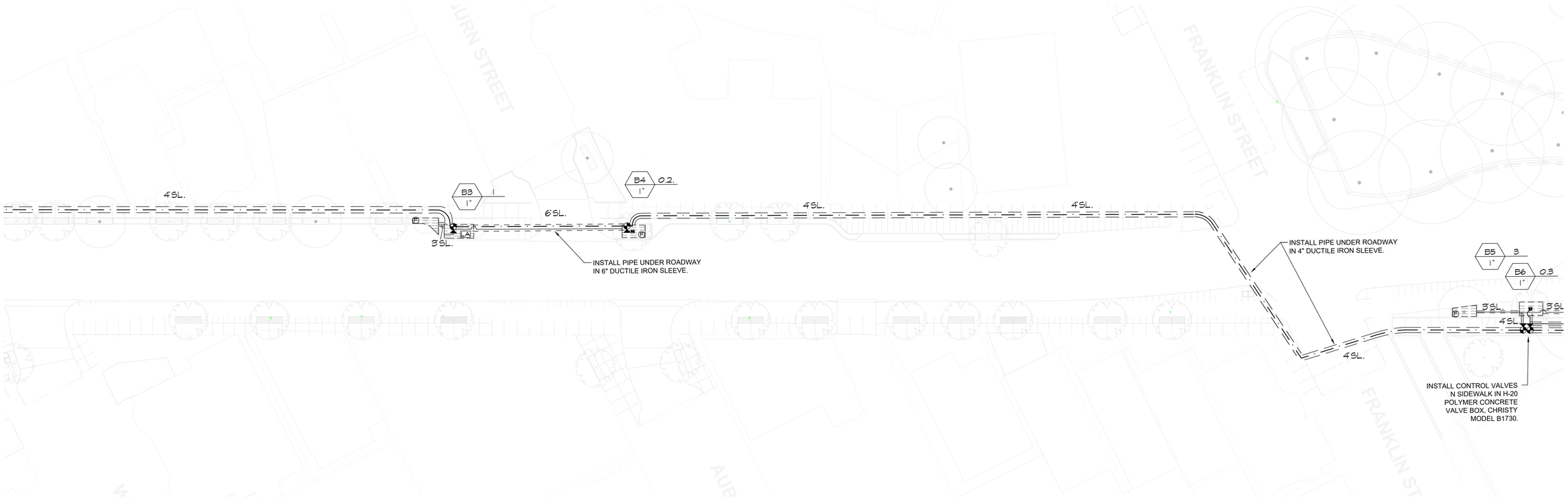

SEE SHEET I-1.07

N

PLAN

0 20 50 100

SCALE: 1" = 20'

Irrigation Consulting, Inc.

Providing innovative design solutions for irrigation worldwide.

20 Merrit Parkway
Nashua, NH 03063
(978) 433.8472

112 S. Old Statesville Rd., Suite 109
Huntersville, NC 28078
(704) 843.5688

www.irrigationconsulting.com

ISSUED FOR BID

HDR ENGINEERING, INC.
99 HIGH STREET, SUITE 2300
BOSTON, MASSACHUSETTS 02110-2378
(617) 357-7700

HALVORSON
Tighe&Bond STUDIO
25 KINGSTON ST, BOSTON MA 02111-2200
(PHONE) 617.536.0380
WWW.HALVORSONDESIGN.COM

Scale			
Date			
Job No.			
Designed by			
Drawn by			
Checked by	No.	Description	Date
Approved by	REVISIONS		

CAMBRIDGE DEPARTMENT OF PUBLIC WORKS

Client	CITY OF CAMBRIDGE, MA	Sheet	I-1.06
Project	RIVER STREET INFRASTRUCTURE AND STREETSCAPE PROJECT	Total Sheets	381
Drawing	**IRRIGATION PLAN-6**	File No.	

File: D:\PROJECTS\HALVORSON\RIVER STREET\06-100% REV2\7113XXX_IRR RIVER STREET_100%_REV2.DWG Plotted: 3/28/2022 1:56:43 PM

SEE SHEET I-1.06

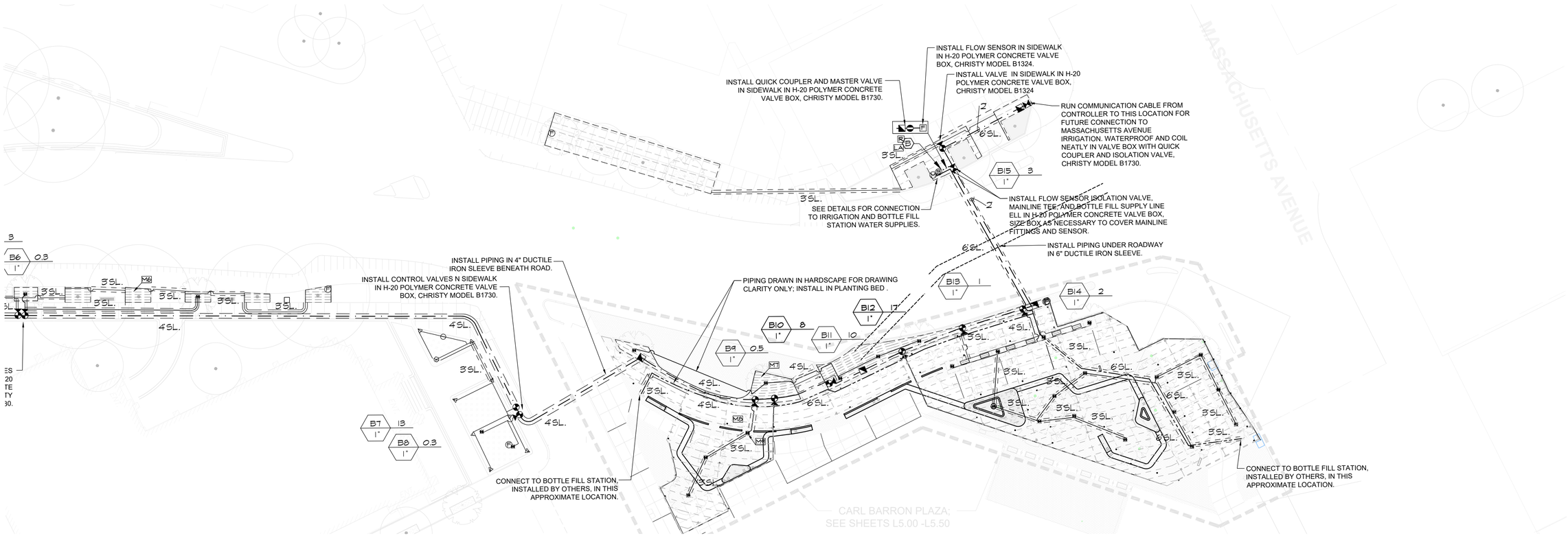

Irrigation Consulting, Inc.
Providing innovative design solutions for irrigation worldwide.
20 Merrit Parkway
Nashua, NH 03062
(978) 433.8472
112 S. Old Statesville Rd., Suite 109
Huntersville, NC 28078
(704) 843.3688
www.irrigationconsulting.com

PLAN

0 20 50 100

SCALE: 1" = 20'

ISSUED FOR BID

HDR ENGINEERING, INC.
99 HIGH STREET, SUITE 2300
BOSTON, MASSACHUSETTS 02110–2378
(617) 357–7700

HALVORSON Tighe&Bond STUDIO
25 KINGSTON ST, BOSTON MA 02111-2200
(PHONE) 617.536.0380
WWW.HALVORSONDESIGN.COM

Scale			
Date			
Job No.			
Designed by			
Drawn by			
Checked by	No.	Description	Date
Approved by	REVISIONS		

Client: CITY OF CAMBRIDGE, MA	Sheet: I-1.07
Project: RIVER STREET INFRASTRUCTURE AND STREETSCAPE PROJECT	Total Sheets: 381
Drawing: **IRRIGATION PLAN-7**	File No.

File: D:\PROJECTS\HALVORSON\RIVER STREET\06-100% REV2\7113XXX_IRR RIVER STREET_100%_REV2.DWG Plotted: 3/28/2022 1:57:26 PM

SEE SHEET L-1.06

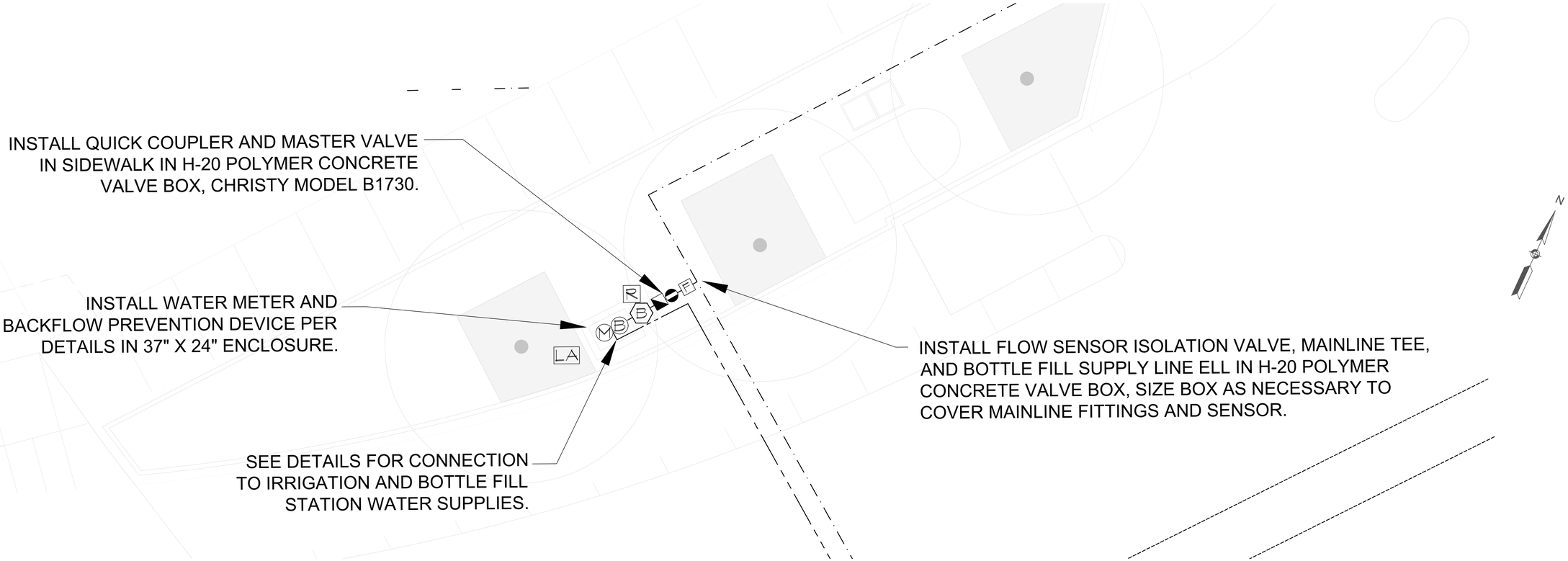

SCALE:1/4" = 1'0"

ISSUED FOR BID

Irrigation Consulting, Inc.
Providing innovative design solutions for irrigation worldwide.
20 Merrit Parkway
Nashua, NH 03062
(978) 433.8712
112 S. Old Statesville Rd., Suite 109
Huntersville, NC 28078
(704) 843.3688
www.irrigationconsulting.com

HDR ENGINEERING, INC.
99 HIGH STREET, SUITE 2300
BOSTON, MASSACHUSETTS 02110-2378
(617) 357-7700

HALVORSON Tighe&Bond STUDIO
25 KINGSTON ST, BOSTON MA 02111-2200
(PHONE) 617.536.0380
WWW.HALVORSONDESIGN.COM

Scale			
Date			
Job No.			
Designed by			
Drawn by			
Checked by	No.	Description	Date
Approved by	REVISIONS		

Client: CITY OF CAMBRIDGE, MA	Sheet: I-1.08
Project: RIVER STREET INFRASTRUCTURE AND STREETSCAPE PROJECT	Total Sheets: 381
Drawing: **IRRIGATION PLAN ENLARGEMENT-1**	File No.

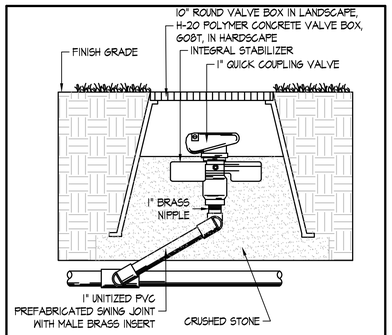

1 QUICK COUPLING VALVE DETAIL
NO SCALE

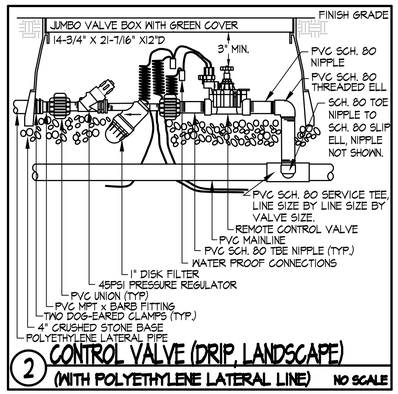

2 CONTROL VALVE (DRIP, LANDSCAPE)
(WITH POLYETHYLENE LATERAL LINE) NO SCALE

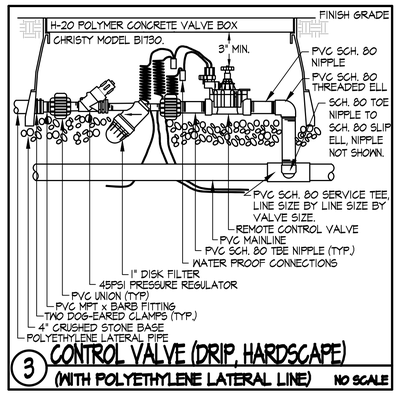

3 CONTROL VALVE (DRIP, HARDSCAPE)
(WITH POLYETHYLENE LATERAL LINE) NO SCALE

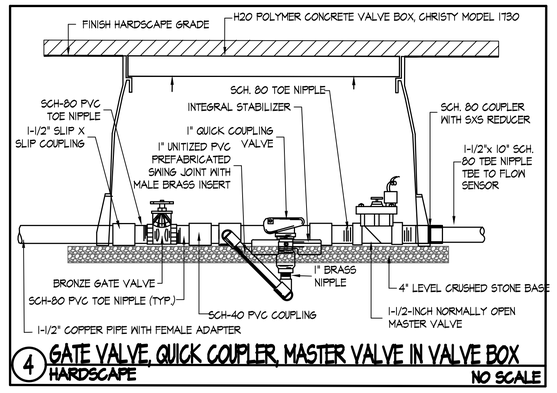

4 GATE VALVE, QUICK COUPLER, MASTER VALVE IN VALVE BOX
HARDSCAPE NO SCALE

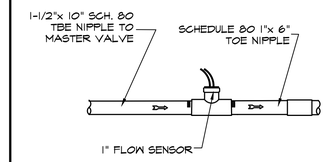

NOTES:
1. NO TURNS/BENDS IN THE PIPE WILL BE PERMITTED 15" BEFORE AND 7.5" AFTER THE FLOW SENSOR.
2. INSTALL FLOW SENSOR IN HARDSCAPE IN H-20 POLYMER CONCRETE VALVE BOX, CHRISTY MODEL BI324.

5 FLOW METER
HARDSCAPE

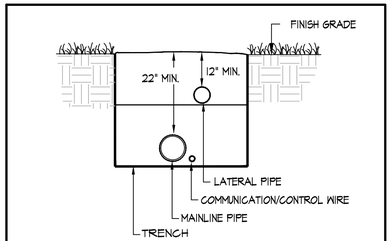

NOTE: TIE LOOSE LOOP OF WIRE AT CHANGES OF DIRECTION

6 TRENCH AND WIRE DETAIL
NO SCALE

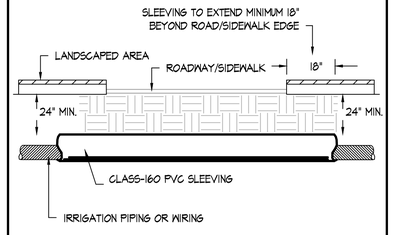

NOTE: PIPE AND WIRE TO BE INSTALLED IN SEPARATE SLEEVES ADJACENT TO EACH OTHER.

7 PIPE AND WIRE SLEEVE DETAIL
NO SCALE

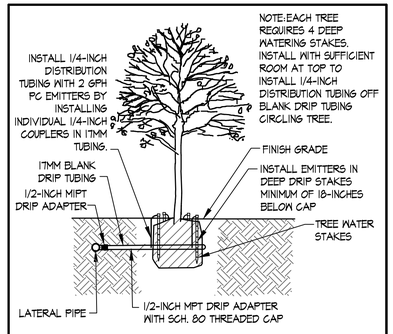

8 24-INCH TREE WATERING STAKE
NO SCALE

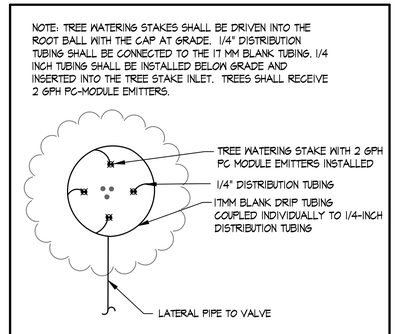

9 TREE PIT WATERING STAKE- PLAN VIEW
NO SCALE

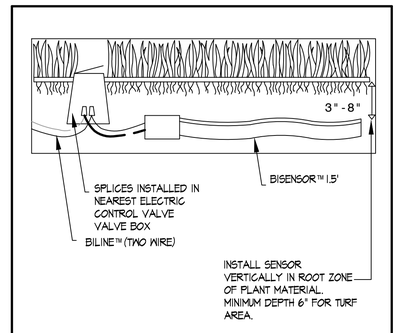

10 MOISTURE SENSOR DETAIL
NO SCALE

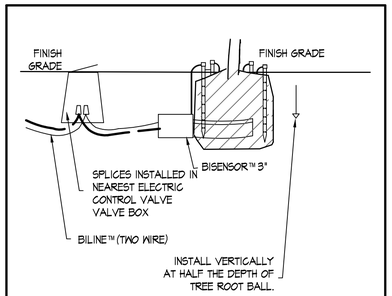

11 MOISTURE SENSOR DETAIL- TREES
NO SCALE

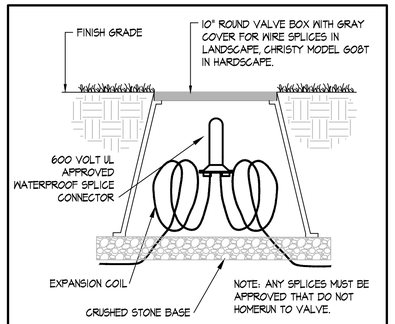

12 WIRE SPLICE DETAIL
NO SCALE

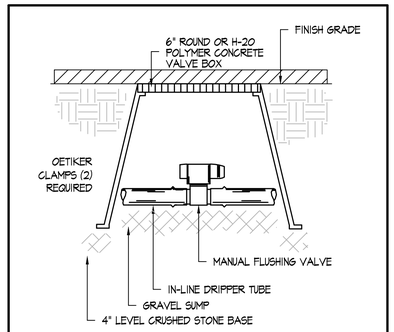

13 MANUAL FLUSHING VALVE
NO SCALE

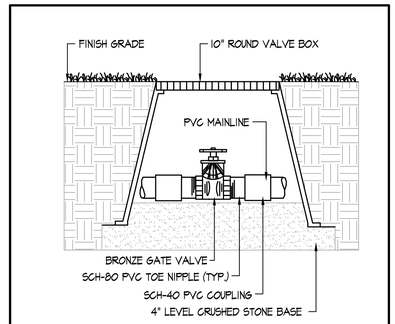

14 ISOLATION GATE VALVE DETAIL
NO SCALE LANDSCAPE

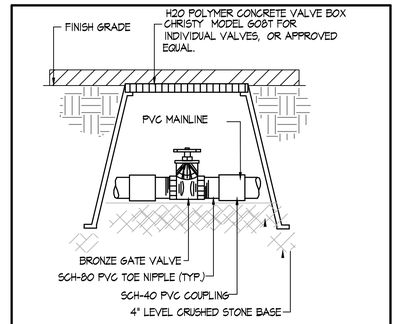

15 ISOLATION GATE VALVE DETAIL
HARDSCAPE NO SCALE

Irrigation Consulting, Inc.
Providing innovative design solutions for irrigation worldwide.
20 Merrit Parkway
Nashua, NH 03062
(978) 433.8472
112 S. Old Statesville Rd., Suite 109
Huntersville, NC 28078
(704) 843.3688
www.irrigationconsulting.com

ISSUED FOR BID

HDR ENGINEERING, INC.
99 HIGH STREET, SUITE 2300
BOSTON, MASSACHUSETTS 02110-2378
(617) 357-7700

HALVORSON Tighe&Bond STUDIO
25 KINGSTON ST, BOSTON MA 02111-2200
(PHONE) 617.536.0380
WWW.HALVORSONDESIGN.COM

JORDAN E. VINCHESI 190984 REGISTERED PROFESSIONAL ENGINEER COMMERCIAL GOLF COURSES

Scale			
Date			
Job No.			
Designed by			
Drawn by			
Checked by	No.	Description	Date
Approved by	REVISIONS		

THE WORKS CAMBRIDGE DEPARTMENT OF PUBLIC WORKS

Client	CITY OF CAMBRIDGE, MA	Sheet I-2.00
Project	RIVER STREET INFRASTRUCTURE AND STREETSCAPE PROJECT	Total Sheets 381
Drawing	**IRRIGATION DETAILS-1**	File No.

File: D:\PROJECTS\HALVORSON\RIVER STREET\06-100% REV2\7113XXX_IRR RIVER STREET_100%_REV2.DWG Plotted: 3/28/2022 1:58:03 PM

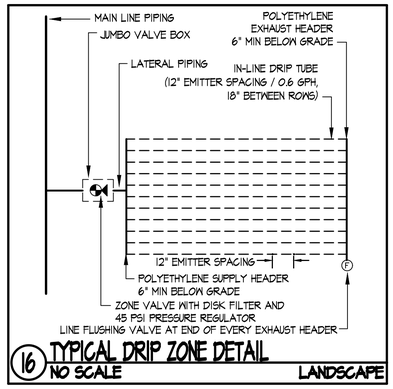

16 TYPICAL DRIP ZONE DETAIL
NO SCALE — LANDSCAPE

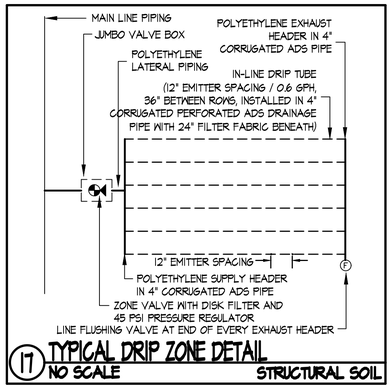

17 TYPICAL DRIP ZONE DETAIL
NO SCALE — STRUCTURAL SOIL

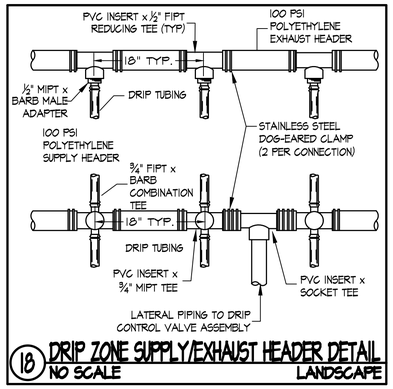

18 DRIP ZONE SUPPLY/EXHAUST HEADER DETAIL
NO SCALE — LANDSCAPE

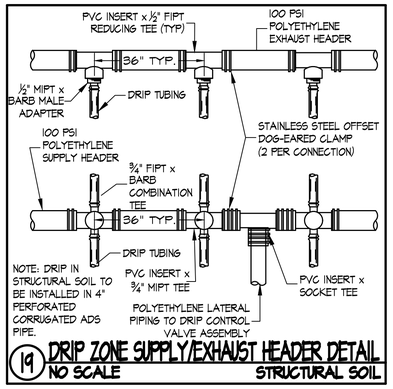

19 DRIP ZONE SUPPLY/EXHAUST HEADER DETAIL
NO SCALE — STRUCTURAL SOIL

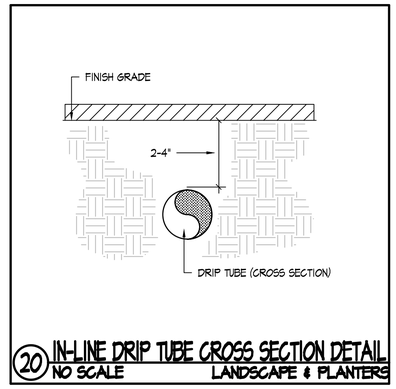

20 IN-LINE DRIP TUBE CROSS SECTION DETAIL
NO SCALE — LANDSCAPE & PLANTERS

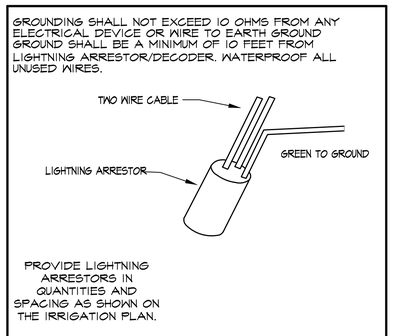

21 LIGHTNING ARRESTOR DETAIL
NO SCALE

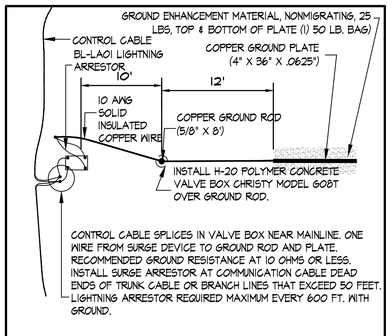

22 LIGHTNING ARRESTOR GROUND DETAIL
NO SCALE

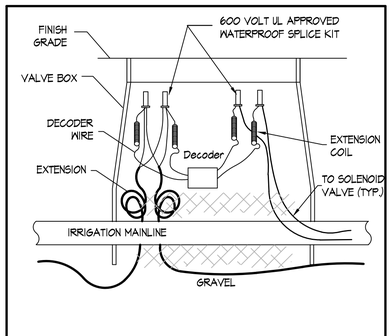

23 DECODER IN VALVE BOX DETAIL
NO SCALE

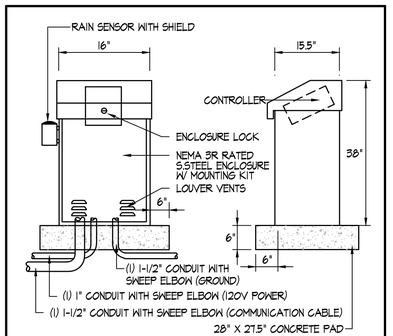

24 OUTDOOR CONTROLLER ENCLOSURE DETAIL
NO SCALE

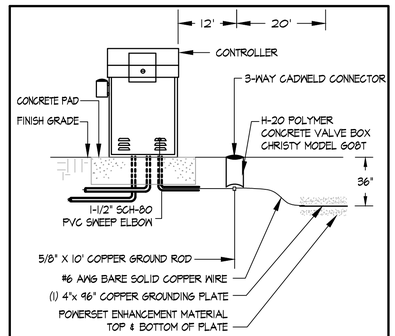

25 CONTROLLER GROUNDING DETAIL-PROFILE
NO SCALE

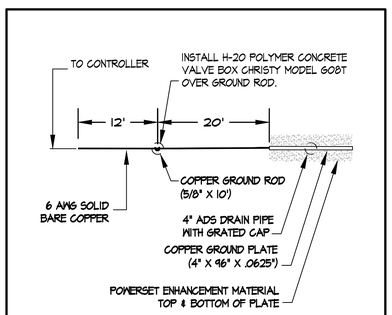

26 CONTROLLER GROUNDING DETAIL-PLAN
NO SCALE

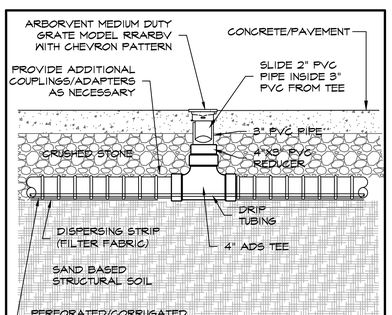

27 AERATION PIPE/ DRIP TUBING ACCESS BOX
NO SCALE

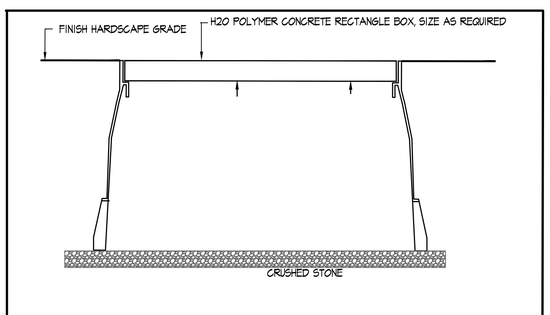

28 POLYMER CONCRETE VALVE BOX FOR MAINLINE OR LATERAL TURNS
HARDSCAPE — NO SCALE

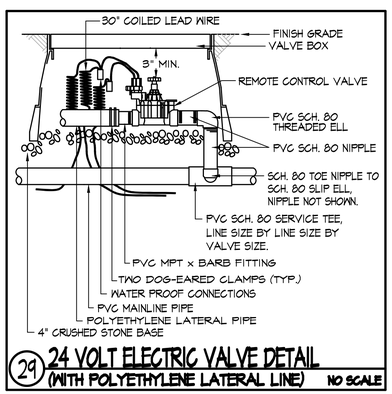

29 24 VOLT ELECTRIC VALVE DETAIL (WITH POLYETHYLENE LATERAL LINE)
NO SCALE

Irrigation Consulting, Inc.
Providing innovative design solutions for irrigation worldwide.
20 Merrit Parkway
Nashua, NH 03062
(978) 433.8472
112 S. Old Statesville Rd., Suite 109
Huntersville, NC 28078
(704) 843.3688
www.irrigationconsulting.com

ISSUED FOR BID

HDR ENGINEERING, INC.
99 HIGH STREET, SUITE 2300
BOSTON, MASSACHUSETTS 02110-2378
(617) 357-7700

HALVORSON Tighe&Bond STUDIO
25 KINGSTON ST, BOSTON MA 02111-2200
(PHONE) 617.536.0380
WWW.HALVORSONDESIGN.COM

Scale			
Date			
Job No.			
Designed by			
Drawn by			
Checked by	No.	Description	Date
Approved by	REVISIONS		

THE WORKS — CAMBRIDGE DEPARTMENT OF PUBLIC WORKS

Client: CITY OF CAMBRIDGE, MA	Sheet: I-2.01
Project: RIVER STREET INFRASTRUCTURE AND STREETSCAPE PROJECT	Total Sheets: 381
Drawing: **IRRIGATION DETAILS-2**	File No.

File: D:\PROJECTS\HALVORSONRIVER STREET\06-100% REV2\7113XXX_IRR RIVER STREET_100%_REV2.DWG Plotted: 3/28/2022 1:59:00 PM

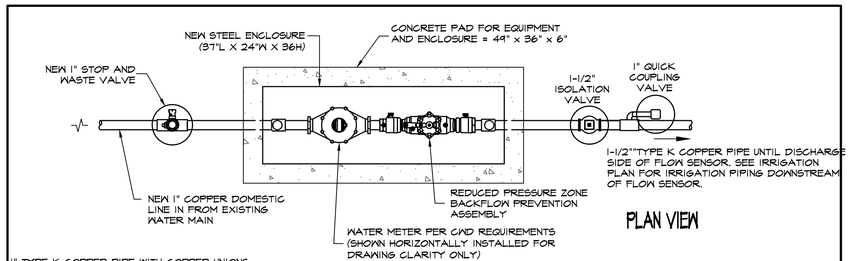

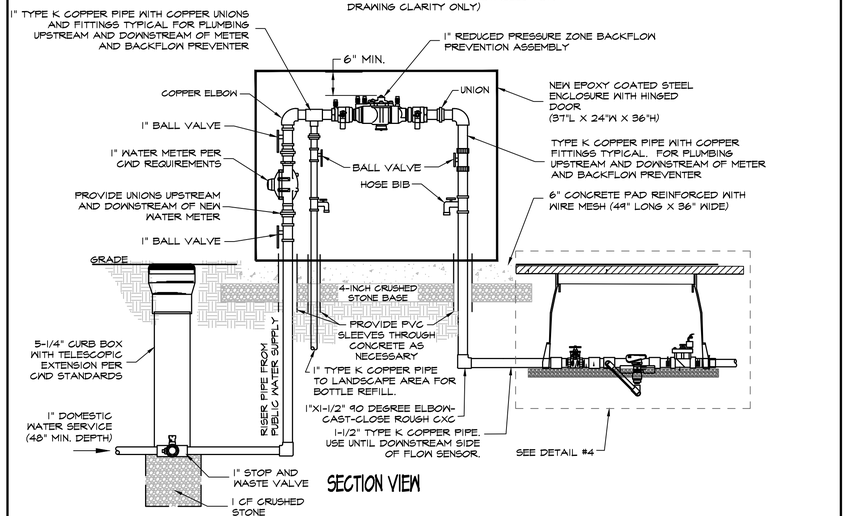

30 BACKFLOW AND WATER METER DETAIL - IRRIGATION SERVICE AND BOTTLE FILL
NO SCALE

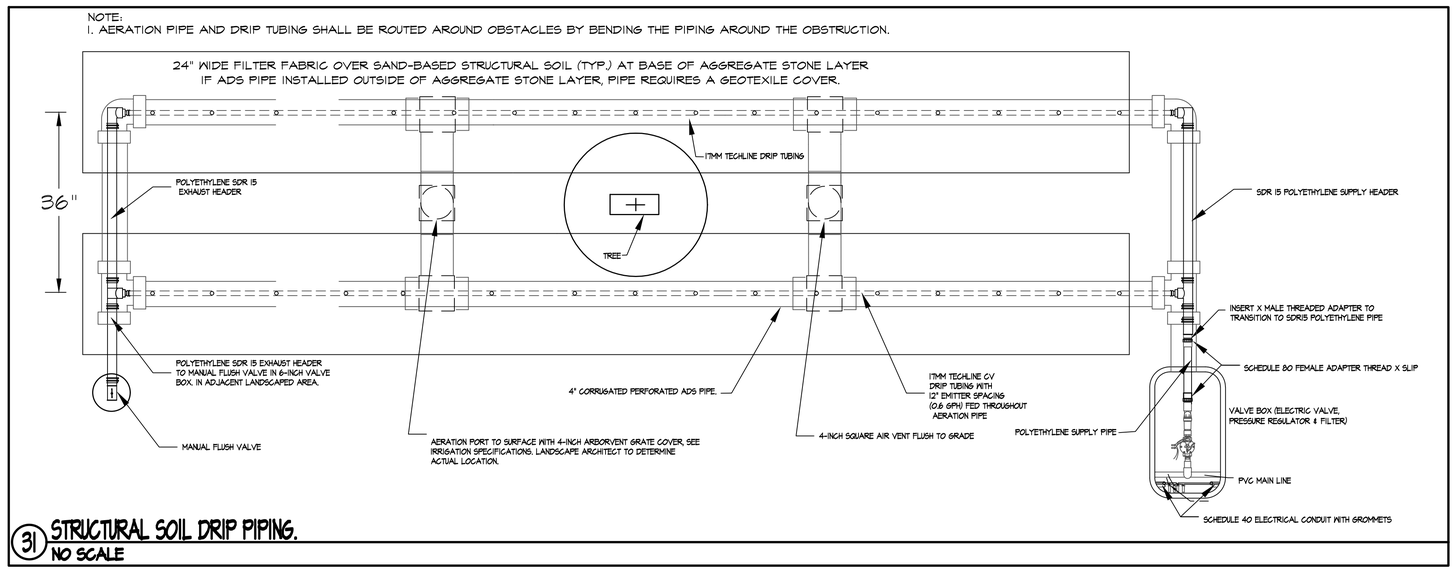

31 STRUCTURAL SOIL DRIP PIPING.
NO SCALE

Irrigation Consulting, Inc.
Providing innovative design solutions for irrigation worldwide.
20 Merrit Parkway
Nashua, NH 03062
(978) 433.8472
112 S. Old Statesville Rd., Suite 109
Huntersville, NC 28078
(704) 845.3688
www.irrigationconsulting.com

ISSUED FOR BID

HDR ENGINEERING, INC.
99 HIGH STREET, SUITE 2300
BOSTON, MASSACHUSETTS 02110-2378
(617) 357-7700

HALVORSON Tighe&Bond STUDIO
25 KINGSTON ST, BOSTON MA 02111-2200
(PHONE) 617.536.0380
WWW.HALVORSONDESIGN.COM

Scale			
Date			
Job No.			
Designed by			
Drawn by			
Checked by	No.	Description	Date
Approved by	REVISIONS		

Client: CITY OF CAMBRIDGE, MA
Project: RIVER STREET INFRASTRUCTURE AND STREETSCAPE PROJECT
Drawing: **IRRIGATION DETAILS-3**
Sheet: I-2.02
Total Sheets: 381
File No.

File: D:\PROJECTS\HALVORSON\RIVER STREET\06-100% REV2\113XXX_IRR RIVER STREET_100%_REV2.DWG Plotted: 3/28/2022 2:00:04 PM

NOTES:

- ALL TRAFFIC CONTROL DEVICES AND WORK ZONE SET-UPS ARE TO BE IN ACCORDANCE WITH MASSDOT AND MUTCD STANDARDS.
- DRUM SPACING SHALL BE 25 FEET ON ALL STREETS.
- MINIMUM SPACING OF TRAFFIC DEVICES IN A TAPER (DRUMS AND CONES) IS EQUAL IN FEET TO THE POSTED SPEED LIMIT IN MILER PER HOUR.
- ALL SIGNS SHOWN SHALL BE MOUNTED ON SUITABLE TEMPORARY SUPPORTS SUCH THAT SIGNS ARE CELARLY VISIBLE TO APPROACHING TRAFFIC.
- MAINTAIN ACCESS TO ALL DRIVEWAYS AND PESTRIAN SIDEWALKS AT ALL TIMES, UNLESS OTHERWISE NOTED.
- TEMPORARY WOODEN ACCESS RAMPS WILL BE PROVIDED FOR ALL ABUTTERS DURING CONSTRUCTION.
- THE FIRST FIVE PLASTIC DRUMS OF A TAPER SHALL BE MOUNTED WITH TYPE A LIGHTS.
- THE ADVISORY SPEED LIMIT, IF REQUIRED, SHALL BE DETERMINED BY THE ENGINEER.
- SIGN LOCATIONS AND DISTANCES ARE A GUIDE AND MAY BE ADJUSTED IN THE FIELD BY THE ENGINEER.
- MINIMUM LANE WITH IS 11 FEET, MEASURED FROM THE EDGE OF DRUMS OR MEDIAN BARRIER.
- ADA COMPLIANT PEDESTRIAN ACCESS SHALL BE MAINTAINED AT ALL TIME, INCLUDING PROPER BARRICADES, RAILINGS, RAMPS, AND SIGNAGE FOR PEDESTRIAN DETOURS OR BYPASSES.
- CONES MAY BE USED IN LIEU OF DRUMS OUTSIDE OF TAPER AREAS.
- ADDITIONAL TRAFFIC CONTROL DEVICES SHALL BE PROVIDED UPON THE CITY'S REQUEST.
- NON-ESSENTIAL TRAFFIC CONTROL DEVICES SHALL BE COVERED OR REMOVED DURING NON-WORK HOURS.
- ALL TRAVEL WAYS SHALL BE PROTECTED FROM DUST AND CONSTRUCTION DEBRIS AT ALL TIMES.
- TRAFFIC CONTROL INCLUDES STREET SWEEPING AND SNOW REMOVAL WITHIN THE WORK ZONE AS NECESSARY.
- CONSTRUCTION WORK ZONE SHALL BE STAGED AS TO ALLOW FOR CONTINUOUS ACCESS AT DRIVE ENTRANCES AND TO MINIMIZE DETOURS TO CAMBRIDGE ROADS.
- EACH ABUTTER SHALL BE NOTIFIED BY THE CONTRACTOR AT LEAST 24 HOURS IN ADVANCE OF THE START OF ANY WORK THAT WILL REQUIRE THE TEMPORARY CLOSURE OF ACCESS.
- EXCAVATIONS SHALL BE PROTECTED BY STEEL PLATES OR BARRICADES DURING NON-WORK HOURS.
- GRADE SEPARATIONS IN EXCESS OF 2" DURING NON-WORKING HOURS WILL REQUIRE DELINEATION BY DRUMS.
- EXCAVATION EDGES IN EXCESS OF 4" DEEP SHALL BE PROTECTED DURING NON-WORKING HOURS BY BACKFILLING WITH A WEDGE OF GRAVEL COMPACTED TO A 4:1 SLOPE.
- ALL EXISTING PEDESTRIAN CROSSINGS SHALL BE MAINTAINED. ALTERNATIVE CROSSINGS SHALL BE PROVIDED WHEN EXISTING CROSSINGS ARE DISRUPTED BY CONSTRUCTION ACTIVITY. TEMPORARY LOCATIONS, SIGNAGE AND TRAFFIC CONTROLS SHALL BE APPROVED BY THE CITY PRIOR TO IMPLEMENTATION.
- PEDESTRIAN WALKWAYS SHALL BE PROTECTED ALONG WORK ZONE WITH CONCRETE BARRIERS AND FENCING.
- POLICE DETAILS SHALL BE SCHEDULED AND COORDINATED BY THE CONTRACTOR TO MAINTAIN PEDESTRIAN AND VEHICULAR TRAFFIC.
- DETOURS SHALL ONLY BE ALLOWED AS INDICATED OR AS APPROVED BY THE CITY OF CAMBRIDGE TRAFFIC AND PARKING DEPARTMENT.

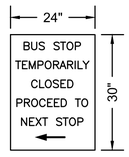

NOTE:
DIRECTION OF ARROW SHOULD DIRECT RIDERS/BUS OPERATORS TO THE NEAREST ADJACENT STOP.

TEMPORARY BUS STOP CLOSURE SIGN

SCALE: N.T.S.

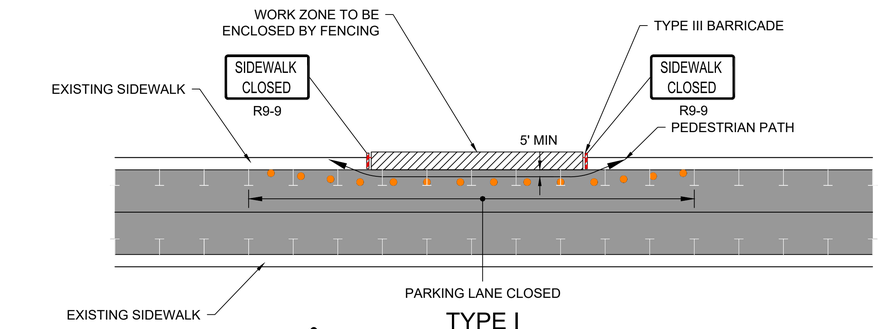

TYPE I

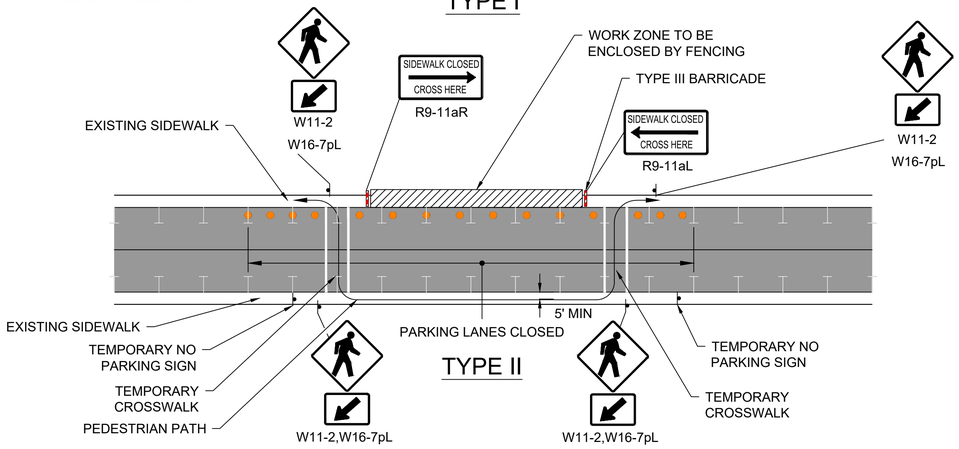

TYPE II

NOTES

1. ADDITIONAL ADVANCE WARNING MAY BE NECESSARY.
2. CONTROLS ONLY FOR PEDESTRIAN TRAFFIC ARE SHOWN. VEHICULAR TRAFFIC SHOULD BE HANDLED AS SHOWN ELSEWHERE.
3. STREET LIGHTING SHOULD BE CONSIDERED WHEN LOCATING CONTROL DEVICES.
4. IF THE WORK ZONE DOES NOT PERMIT PEDESTRIANS TO TRAVEL ADJACENT TO IT AS SHOWN IN PEDESTRIAN BYPASS TYPE I, TEMPORARY CROSSWALKS WITH APPROPRIATE SIGNS SHOULD BE INSTALLED TO CROSS PEDESTRIANS TO THE OPPOSITE SIDE OF THE STREET AS SHOWN IN PEDESTRIAN BYPASS TYPE II, AND AS DIRECTED BY THE ENGINEER. TEMPORARY CURB RAMPS WILL BE REQUIRED AT ALL TEMPORARY CROSSWALK LOCATIONS THAT DO NOT HAVE AN EXISTING ADA COMPLIANT RAMP.
5. BYPASS IS TO BE USED IN CONJUCTION WITH THE PROPOSED LANE CLOSURE DETAILS AND DURING CONSTRUCTION STAGING, AS DIRECTED BY THE ENGINEER.
6. THE TEMPORARY SIDEWALK SHOULD BE A MINIMUM OF 4 FEET WIDE. IF THIS WALKWAY EXCEEDS 200 FEET THEN A 5 FOOT X 5 FOOT PASSING ZONE. (FOR SHORT TERM SETUPS < 10 HOURS, THIS CONDITION MAY BE WAIVED. A NOTE WOULD NEED TO BE INCLUDED IN THE TTCP THAT STATES HOW THE CONTRACTOR SHOULD ADDRESS THIS ISSUE.)

PEDESTRIAN BYPASS

SCALE: N.T.S.

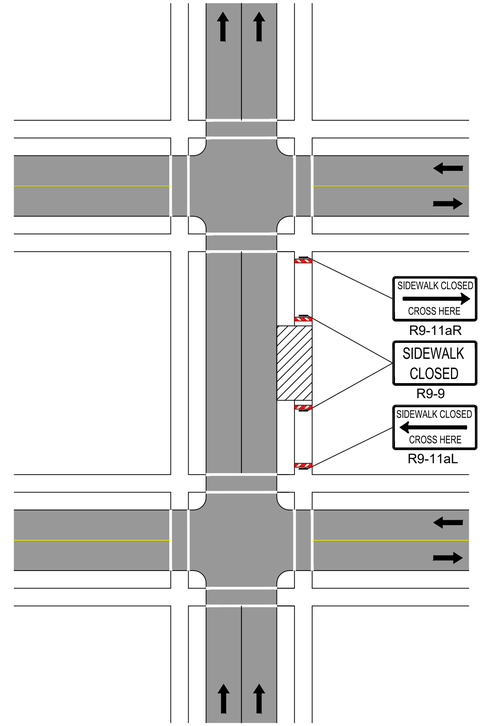

NOTE:
IF A MINIMUM WIDTH OF 48" OF SOLID SMOOTH UNOBSTRUCTED SURFACE REMAINS ALONG THE WORK AREA THEN THE DETAIL CAN BE DISREGARDED. DELINEATION OF THE WORK AREA WILL STILL BE REQUIRED. All PEDESTRIAN DETOUR ROUTES SHALL BE ADA/MAAB COMPLIANT IN THEIR ENTIRETY.

SIDEWALK CLOSED WITHOUT DETOUR

SCALE: N.T.S.

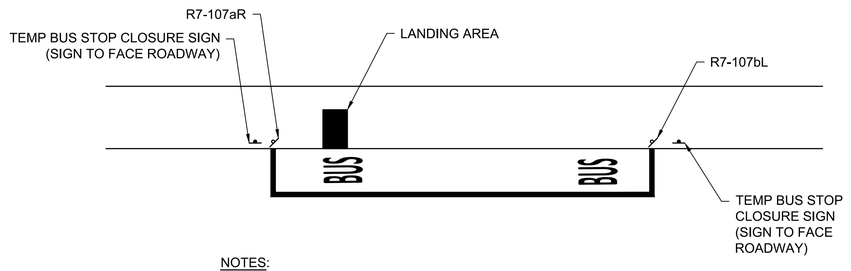

NOTES:

- ALL STOPS TO REMAIN OPEN UNLESS OTHERWISE DIRECTED BY THE ENGINEER.
- THIS DETAIL IS NOT TO BE USED IF THE ADJACENT BUS STOP IS >400' FROM THE PROP TEMP CLOSURE LOCATION.
- SEE SDWK CLOSURE DETAILS TO BE USED WITH THIS SET UP.

TEMPORARY BUS STOP CLOSURE DETAIL

SCALE: N.T.S.

ISSUED FOR BID

HDR ENGINEERING, INC.
99 HIGH STREET, SUITE 2300
BOSTON, MASSACHUSETTS 02110-2378
(617) 357-7700

McMAHON TRANSPORTATION ENGINEERS & PLANNERS

COMMONWEALTH OF MASSACHUSETTS
CONOR MURPHY
CIVIL
No. 54506
REGISTERED PROFESSIONAL ENGINEER
5/2/2022

Scale	AS NOTED			
Date	MAY 2022			
Job No.	----			
Designed by	EKC			
Drawn by	EKC			
Checked by	CPM	No.	Description	Date
Approved by	CPM		REVISIONS	

THE WORKS — CAMBRIDGE DEPARTMENT OF PUBLIC WORKS

Client	CITY OF CAMBRIDGE, MA	Sheet	TMP-1.01
Project	RIVER STREET INFRASTRUCTURE AND STREETSCAPE PROJECT	Total Sheets	381
Drawing	**TRAFFIC MANAGEMENT DETAIL - 1**	File No.	

Plotted: 5/2/2022 2:07:06 PM
File: I:\ENGIY16043.45 RIVER STREET\HD\DWG\PLOT\7113XXX_(TMP LOCUS AND PLAN).DWG

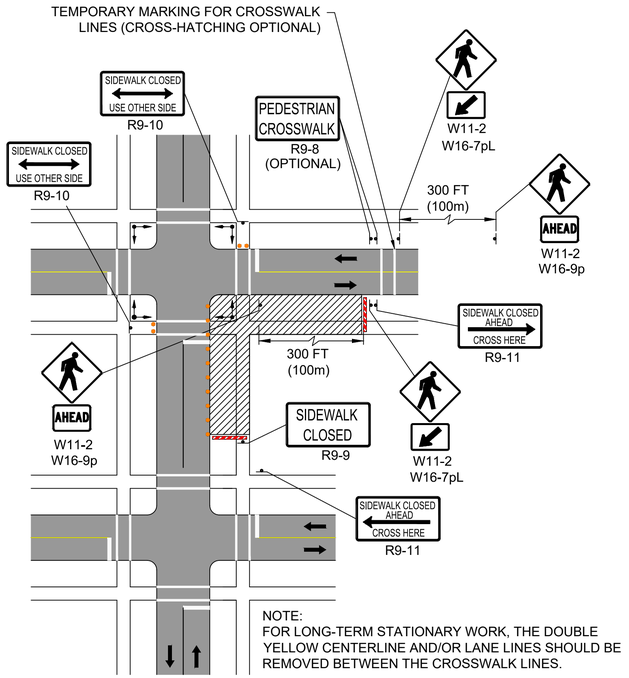

NOTE:
FOR LONG-TERM STATIONARY WORK, THE DOUBLE YELLOW CENTERLINE AND/OR LANE LINES SHOULD BE REMOVED BETWEEN THE CROSSWALK LINES.

PEDESTRIAN DETOUR
SCALE: N.T.S.

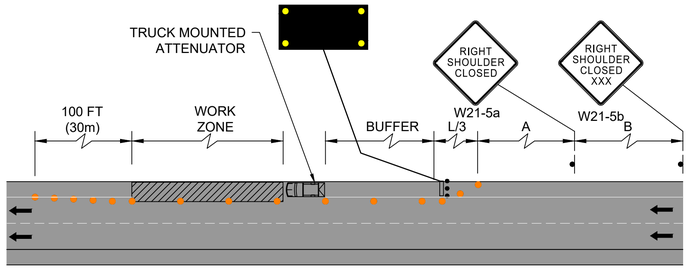

RIGHT SHOULDER CLOSED
SCALE: N.T.S.

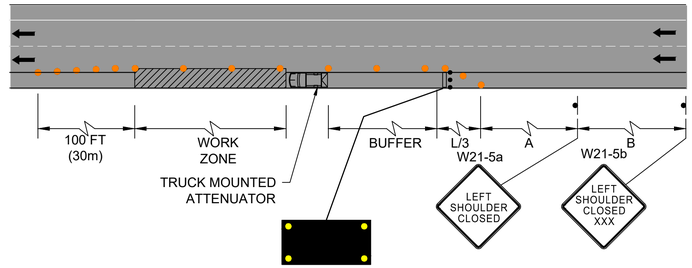

LEFT SHOULDER CLOSED
SCALE: N.T.S.

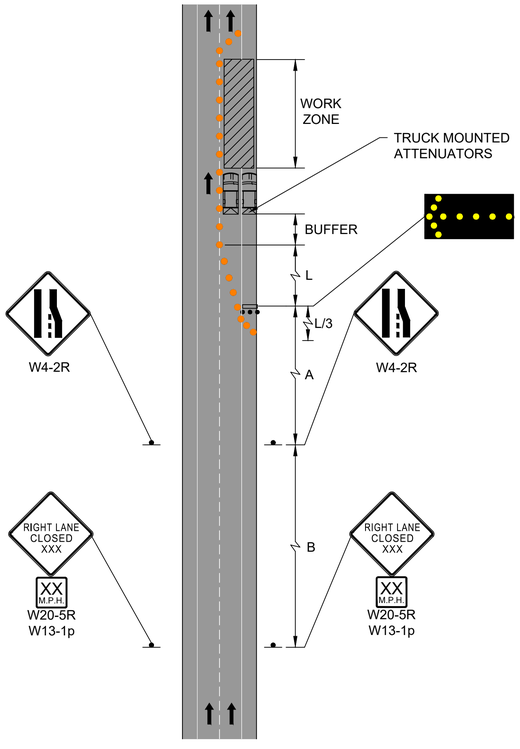

RIGHT LANE CLOSURE (SHORT TERM)
SCALE: N.T.S.

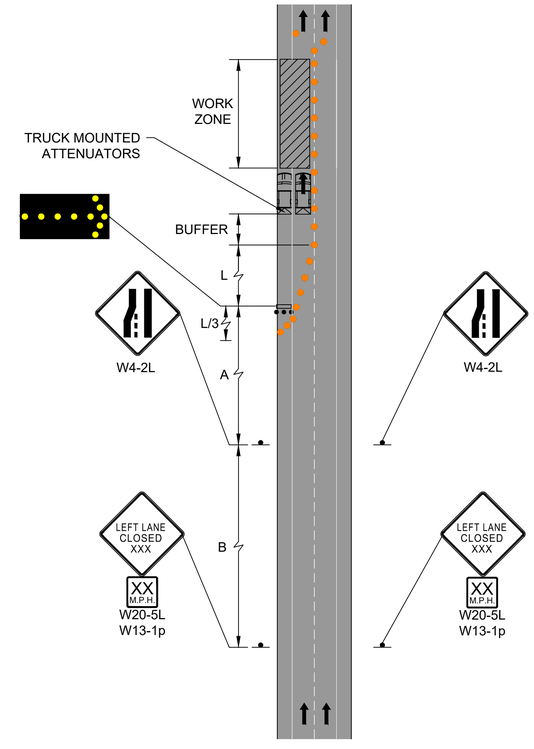

LEFT LANE CLOSURE (SHORT TERM)
SCALE: N.T.S.

ISSUED FOR BID

HDR ENGINEERING, INC.
99 HIGH STREET, SUITE 2300
BOSTON, MASSACHUSETTS 02110–2378
(617) 357–7700

McMAHON TRANSPORTATION ENGINEERS & PLANNERS

COMMONWEALTH OF MASSACHUSETTS
CONOR MURPHY
CIVIL
No. 54506
REGISTERED PROFESSIONAL ENGINEER
5/2/2022

Scale	AS NOTED
Date	MAY 2022
Job No.	----
Designed by	EKC
Drawn by	EKC
Checked by	CPM
Approved by	CPM

No.	Description	Date
	REVISIONS	

THE CAMBRIDGE DEPARTMENT OF PUBLIC WORKS

Client	CITY OF CAMBRIDGE, MA
Project	RIVER STREET INFRASTRUCTURE AND STREETSCAPE PROJECT
Drawing	**TRAFFIC MANAGEMENT DETAIL - 2**
Sheet	TMP-1.02
Total Sheets	381
File No.	

File: I:\ENGIY16043.45 RIVER STREET\HD\DWG\PLOT\7113XXX_(TMP LOCUS AND PLAN).DWG Plotted: 5/2/2022 2:07:08 PM

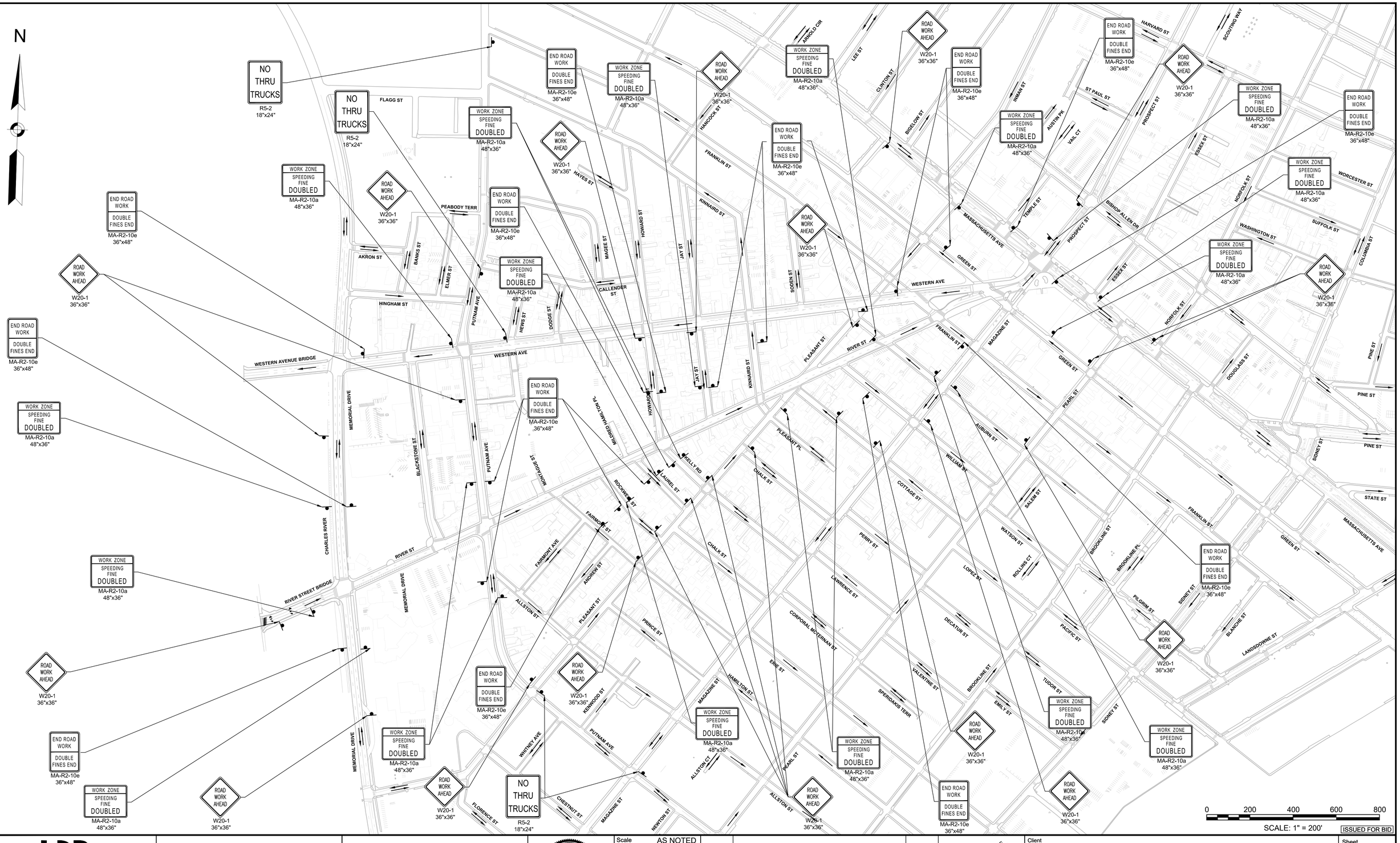

HDR ENGINEERING, INC.
99 HIGH STREET, SUITE 2300
BOSTON, MASSACHUSETTS 02110–2378
(617) 357–7700

McMAHON TRANSPORTATION ENGINEERS & PLANNERS

CONOR MURPHY CIVIL No. 54506 REGISTERED PROFESSIONAL ENGINEER
5/2/2022

Scale	AS NOTED
Date	MAY 2022
Job No.	----
Designed by	EKC
Drawn by	EKC
Checked by	CPM
Approved by	CPM

No.	Description	Date
	REVISIONS	

THE WORKS — CAMBRIDGE DEPARTMENT OF PUBLIC WORKS

Client	CITY OF CAMBRIDGE, MA
Project	RIVER STREET INFRASTRUCTURE AND STREETSCAPE PROJECT
Drawing	**TRAFFIC MANAGEMENT DETAIL - 3**
Sheet	TMP-1.03
Total Sheets	381
File No.	

File: I:\ENG\Y16043.45 RIVER STREET\HD\DWG\PLOT\7113XXX_(TMP LOCUS AND PLAN).DWG Plotted: 5/2/2022 3:27:35 PM

SUGGESTED RIVER STREET TRUCK DETOUR

N

NOTES:

1. DETOURS SHALL BE POSTED WITH APPROPRIATE "ROAD CLOSED" AND DETOUR SIGNS.
2. DETOUR SIGNS SHALL BE POSTED WITH A STREET NAME PLAQUE OF THE STREET BEING DETOURED.
3. DETOUR SIGNS AND PLAQUES SHALL BE POSTED AT EACH MAJOR INTERSECTION AND A DETOUR SIGN AND PLAQUE WILL BE POSTED MID-BLOCK.
4. ALL DETOURS SHALL BE MUTCD COMPLIANT.
5. TRAFFIC ENGINEERING PLANS FOR THE PROPOSED DETOUR ROUTE SHALL BE SUBMITTED TO THE CITY AND APPROVED PRIOR TO COMMENCEMENT OF WORK REQUIRING A DETOUR.
6. ANY WORK THAT IMPACTS PUBLIC BUSING OR PRIVATE BUSING SHALL BE COORDINATED WITH THE CITY AND/OR MBTA AT LEAST TWO WEEKS AHEAD OF TIME (EX. SCHOOL AND MBTA BUSES).
7. REFER TO SECTION 01570 (MAINTENANCE AND PROTECTION OF TRAFFIC) OF CONTRACT DOCUMENTS FOR INFORMATION ON WHEN THE TRUCK DETOUR MAY BE IMPLEMENTED AND ADDITIONAL DETAILS.

0 200 400 600 800

SCALE: 1" = 200'

LEGEND

- TRAFFIC FLOW DIRECTION
- SUGGESTED TRUCK DETOUR ROUTE

ISSUED FOR BID

HDR ENGINEERING, INC.
99 HIGH STREET, SUITE 2300
BOSTON, MASSACHUSETTS 02110–2378
(617) 357–7700

McMAHON TRANSPORTATION ENGINEERS & PLANNERS

COMMONWEALTH OF MASSACHUSETTS
CONOR MURPHY
CIVIL
No. 54506
REGISTERED PROFESSIONAL ENGINEER
5/2/2022

Scale	AS NOTED			
Date	MAY 2022			
Job No.	----			
Designed by	EKC			
Drawn by	EKC			
Checked by	CPM	No.	Description	Date
Approved by	CPM	REVISIONS		

THE CAMBRIDGE DEPARTMENT OF PUBLIC WORKS

Client	CITY OF CAMBRIDGE, MA
Project	RIVER STREET INFRASTRUCTURE AND STREETSCAPE PROJECT
Drawing	**TRAFFIC MANAGEMENT DETOUR - 1**
Sheet	TMP-1.04
Total Sheets	381
File No.	

File: I:\ENGIY16043.45 RIVER STREET\HD\DWG\PLOT\7113XXX_(TMP DETOURS).DWG Plotted: 5/2/2022 3:18:55 PM

SUGGESTED RIVER STREET MBTA DETOUR

NOTES:

1. DETOURS SHALL BE POSTED WITH APPROPRIATE "ROAD CLOSED" AND DETOUR SIGNS.
2. DETOUR SIGNS SHALL BE POSTED WITH A STREET NAME PLAQUE OF THE STREET BEING DETOURED.
3. DETOUR SIGNS AND PLAQUES SHALL BE POSTED AT EACH MAJOR INTERSECTION AND A DETOUR SIGN AND PLAQUE WILL BE POSTED MID-BLOCK.
4. ALL DETOURS SHALL BE MUTCD COMPLIANT.
5. TRAFFIC ENGINEERING PLANS FOR THE PROPOSED DETOUR ROUTE SHALL BE SUBMITTED TO THE CITY AND APPROVED PRIOR TO COMMENCEMENT OF WORK REQUIRING A DETOUR.
6. ANY WORK THAT IMPACTS PUBLIC BUSING OR PRIVATE BUSING SHALL BE COORDINATED WITH THE CITY AND/OR MBTA AT LEAST TWO WEEKS AHEAD OF TIME (EX. SCHOOL AND MBTA BUSES).
7. REFER TO SECTION 01570 (MAINTENANCE AND PROTECTION OF TRAFFIC) OF CONTRACT DOCUMENTS FOR INFORMATION ON WHEN THE MBTA DETOUR MAY BE IMPLEMENTED AND ADDITIONAL DETAILS.

0 150 300 450 600

SCALE: 1" = 150'

LEGEND

TRAFFIC FLOW DIRECTION

SUGGESTED MBTA DETOUR ROUTE

ISSUED FOR BID

HDR ENGINEERING, INC.
99 HIGH STREET, SUITE 2300
BOSTON, MASSACHUSETTS 02110–2378
(617) 357–7700

McMAHON TRANSPORTATION ENGINEERS & PLANNERS

COMMONWEALTH OF MASSACHUSETTS — CONOR MURPHY — CIVIL — No. 54506 — REGISTERED PROFESSIONAL ENGINEER — 5/2/2022

Scale	AS NOTED			
Date	MAY 2022			
Job No.	----			
Designed by	EKC			
Drawn by	EKC			
Checked by	CPM	No.	Description	Date
Approved by	CPM	REVISIONS		

THE WORKS — CAMBRIDGE DEPARTMENT OF PUBLIC

Client	CITY OF CAMBRIDGE, MA
Project	RIVER STREET INFRASTRUCTURE AND STREETSCAPE PROJECT
Drawing	**TRAFFIC MANAGEMENT DETOUR - 2**
Sheet	TMP-1.05
Total Sheets	381
File No.	

File: I:\ENGIY\16043.45 RIVER STREET\HDI\DWG\PLOT\7113XXX_(TMP DETOURS).DWG Plotted: 5/2/2022 2:08:04 PM

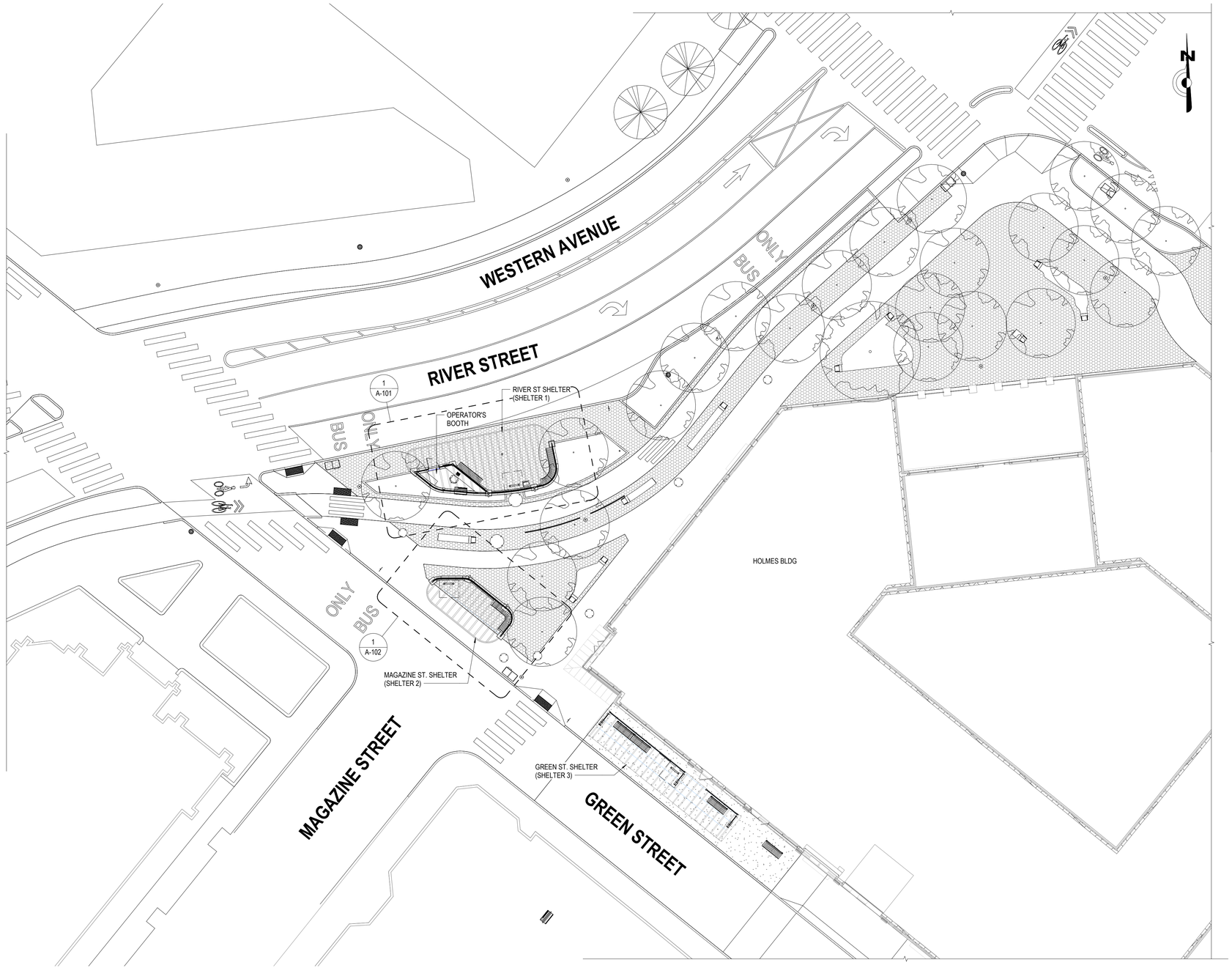

1 PLAZA SITE PLAN
1/16" = 1'-0"

CARL BARRON PLAZA REFERENCE SHEETS:

1. REFER TO SHEETS L-5.00 TO L-5.40 FOR PLAZA LAYOUT, MATERIALS PLAN, PAVING PLAN, AND PLANTING PLAN.
2. REFER TO SHEET L-5.30 FOR PLAZA GRADING.
3. REFER TO SHEET S-2.01 FOR SHELTER AND RIBBON WORKING POINTS.
4. REFER TO SHEET C1.12 FOR PLAZA DRAINAGE PLAN.

SYMBOLS LEGEND

View Title

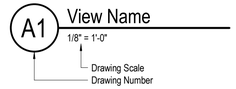

Detail Callout

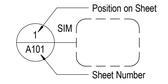

Elevations

Level Datum

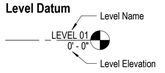

Spot Elevation

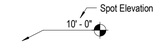

Section

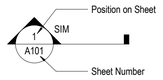

Room Tag

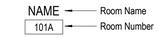

Centerline

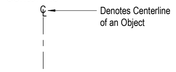

ABBREVIATIONS

&	AND
@	AT
AC	AIR CONDITIONING
AESS	ARCHITECTURAL EXPOSED STRUCTURAL STEEL
AFF	ABOVE FINISHED FLOOR
ALT	ALTERNATE
ALUM	ALUMINUM
APPROX	APPROXIMATE
ARCH	ARCHITECTURAL
BLDG	BUILDING
CIP	CAST-IN-PLACE
CL	CENTERLINE
CLG	CEILING
CLR	CLEAR
CONC	CONCRETE
CONST	CONSTRUCTION
CONT	CONTINUOUS
DEG	DEGREE
DEMO	DEMOLISH OR DEMOLITION
DIA	DIAMETER
DIM	DIMENSION
DN	DOWN
DWG	DRAWING
EA	EACH
EL	ELEVATION
ELEC	ELECTRICAL
FF	FINISH FLOOR
FT	FEET/FOOT
GA	GAUGE
GALV	GALVANIZED
GYP	GYPSUM
HVAC	HEATING VENTILATION AND AIR CONDITIONING
IN	INCH/INCHES
MFR	MANUFACTURER
MIN	MINIMUM
MISC	MISCELLANEOUS
MO	MASONRY OPENING
NA	NOT APPLICABLE
NTS	NOT TO SCALE
OC	ON CENTER
OD	OUTSIDE DIAMETER
OPP	OPPOSITE
PT	PRESSURE TREATED
PTD	PAINTED
R.O.	ROUGH OPENING
RCP	REFLECTED CEILING PLAN
SF	SQUARE FEET/FOOT
SIM	SIMILAR
SS	STAINLESS STEEL
STL	STEEL
STRUCT	STRUCTURE OR STRUCTURAL
TO	TOP OF
TOC	TOP OF CONCRETE
TOS	TOP OF STEEL
TYP	TYPICAL
UNO	UNLESS NOTED OTHERWISE
UON	UNLESS OTHERWISE NOTED
VAR	VARIES
VIF	VERIFY IN FIELD
W/	WITH
W/O	WITHOUT
WWM	WELDED WIRE MESH

0 4' 8' 16' 32'
SCALE: 1/16" = 1' - 0"

CONFORMED SET

HDR ENGINEERING, INC.
99 HIGH STREET, SUITE 2300
BOSTON, MASSACHUSETTS 02110-2378
(617) 357-7700

REGISTERED ARCHITECT
MICHAEL A. BROWN
No. 4453
BOSTON MA
COMMONWEALTH OF MASSACHUSETTS

Scale	AS NOTED			
Date	5/2/2022			
Job No.	10139379			
Designed by	BM / CS			
Drawn by	BM	0	CONFORMED SET	8/5/2022
Checked by	CS	No.	Description	Date
Approved by	MB	REVISIONS		

THE WORKS — CAMBRIDGE DEPARTMENT OF PUBLIC

Client	CITY OF CAMBRIDGE, MA	Sheet	A-100
Project	RIVER STREET INFRASTRUCTURE AND STREETSCAPE PROJECT	Total Sheets	381
Drawing	SITE PLAN	File No.	

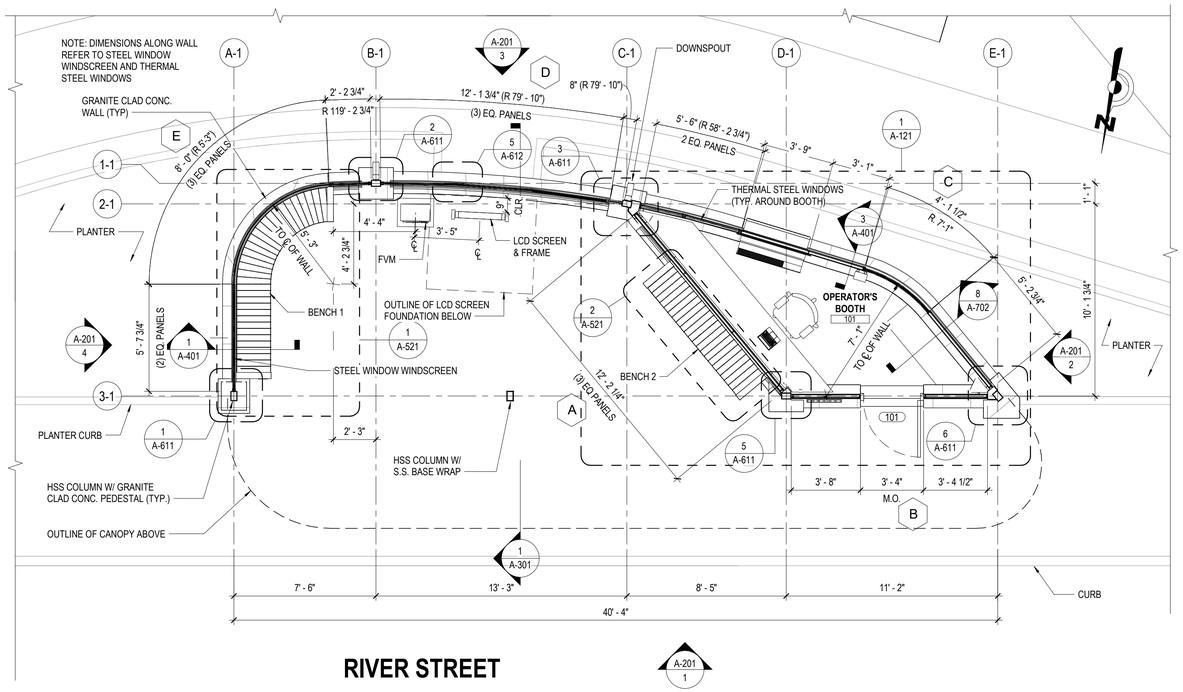

RIVER STREET

1 BUS SHELTER PLAN - RIVER ST
1/4" = 1'-0"

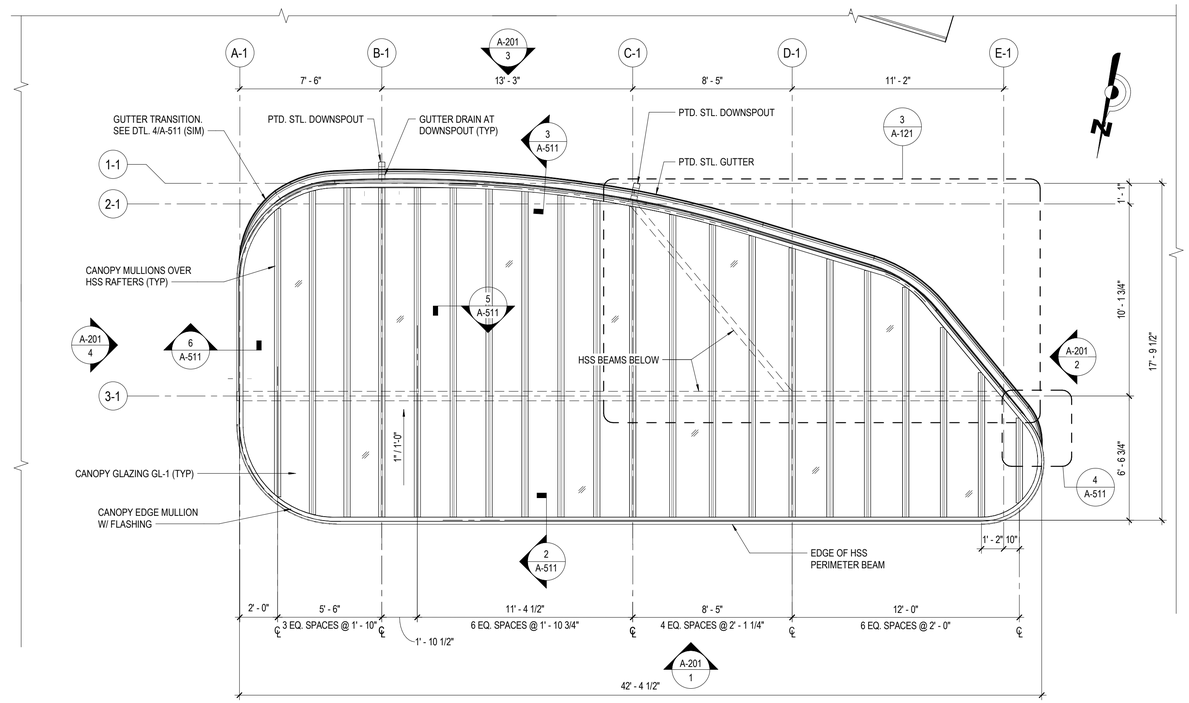

2 BUS SHELTER ROOF PLAN - RIVER ST
1/4" = 1'-0"

NOTES:

1. DIMENSIONS ALONG THE WALLS REFER TO THE STEEL WINDOW SYSTEMS.
2. REFER TO SHEET A-111 FOR GRANITE CLAD CONCRETE WALL LAYOUTS.
3. REFER TO STRUCTURAL DRAWINGS FOR SHELTER LOCATION WORKING POINTS AND GEOMETRY OF CANOPY.
4. REFER TO STRUCTURAL DRAWINGS FOR HSS AND STRUCTURAL STEEL MEMBERS.
5. REFER TO SHEET A-522 FOR FVM NOTES AND INFORMATION.
6. REFER TO SHEET A-522 FOR LCD SCREEN AND FRAME DETAILS.
7. EXTEND DOWNSPOUTS BELOW GRADE AND CONNECT TO PROPOSED DRAIN INLET DPI-11. REFER TO SHEET C1.12 FOR DRAIN INLET LOCATION.

LEGEND	
G.2	WINDOW TAG. SEE SHEETS A-601 AND A-602

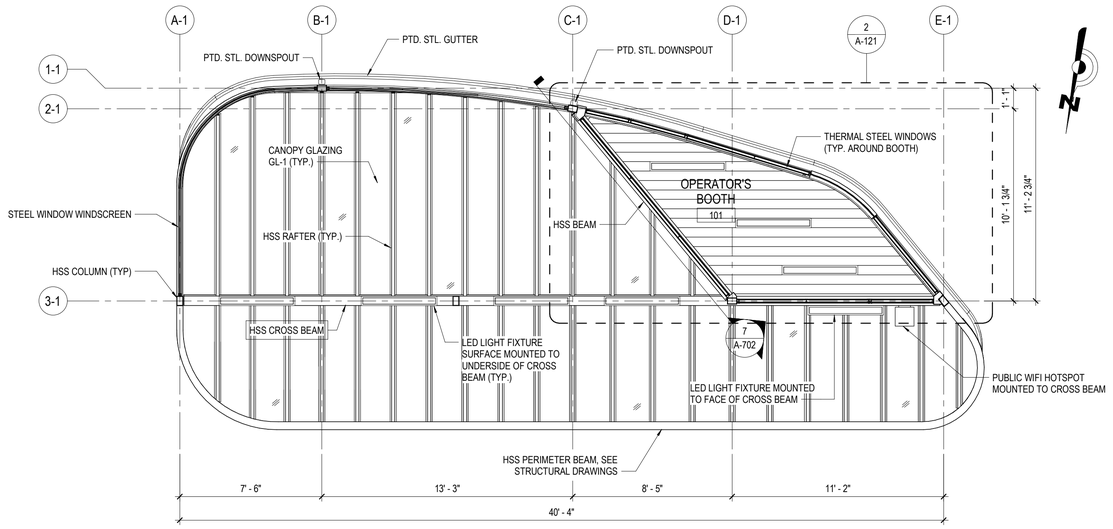

3 BUS SHELTER REFLECTED CEILING PLAN - RIVER ST
1/4" = 1'-0"

0 2' 4' 8'
SCALE: 1/4" = 1' - 0"

CONFORMED SET

HDR ENGINEERING, INC.
99 HIGH STREET, SUITE 2300
BOSTON, MASSACHUSETTS 02110-2378
(617) 357-7700

REGISTERED ARCHITECT MICHAEL A. BOGHIAN No.4453 BOSTON MA COMMONWEALTH OF MASSACHUSETTS

Scale	AS NOTED				
Date	5/2/2022				
Job No.	10139379				
Designed by	BM / CS				
Drawn by	BM	0	CONFORMED SET	8/5/2022	
Checked by	CS	No.	Description	Date	
Approved by	MB	REVISIONS			

THE WORKS — CAMBRIDGE DEPARTMENT OF PUBLIC WORKS

Client	CITY OF CAMBRIDGE, MA	Sheet	A-101
Project	RIVER STREET INFRASTRUCTURE AND STREETSCAPE PROJECT	Total Sheets	381
Drawing	RIVER ST SHELTER - PLANS	File No.	

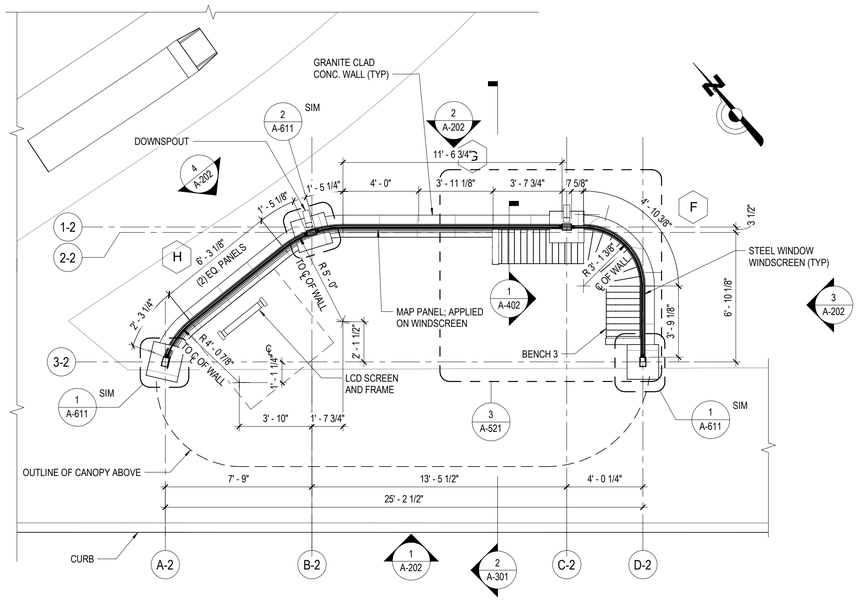

GREEN STREET

1 BUS SHELTER PLAN - MAGAZINE ST

1/4" = 1'-0"

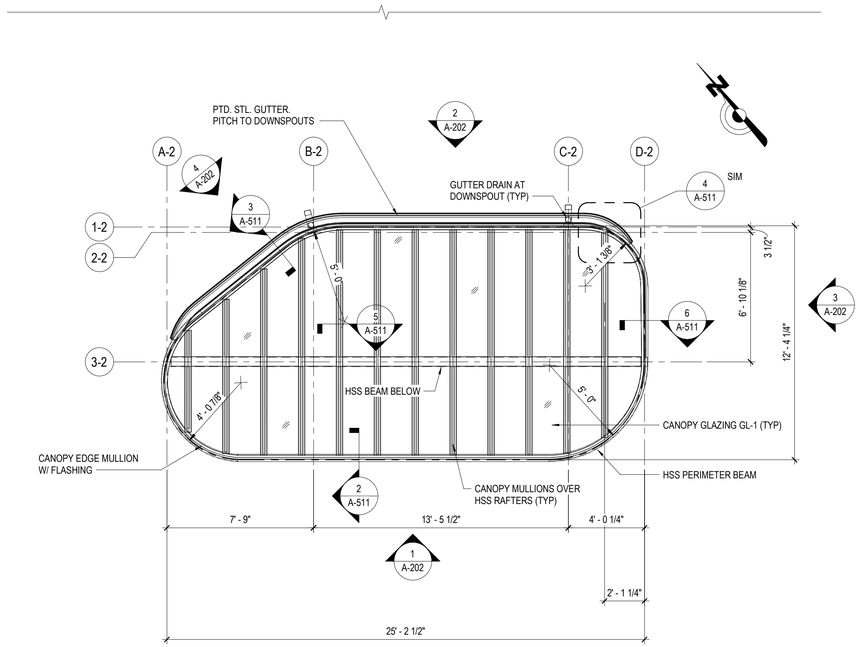

2 BUS SHELTER ROOF PLAN - MAGAZINE ST

1/4" = 1'-0"

NOTES:

1. DIMENSIONS ALONG THE WALLS REFER TO THE STEEL WINDOW SYSTEMS.
2. REFER TO SHEET A-112 FOR GRANITE CLAD CONCRETE WALL LAYOUTS.
3. REFER TO STRUCTURAL DRAWINGS FOR SHELTER LOCATION WORKING POINTS AND GEOMETRY OF CANOPY.
4. REFER TO STRUCTURAL DRAWINGS FOR HSS AND STRUCTURAL STEEL MEMBERS.
5. REFER TO SHEET A-522 FOR LCD SCREEN AND FRAME DETAILS.
6. EXTEND DOWNSPOUTS BELOW GRADE AND CONNECT TO PROPOSED DRAIN INLET DPI-07. REFER TO SHEET C1.12 FOR DRAIN INLET LOCATION.
7. REFER TO SHEET A-101 FOR LEGEND.

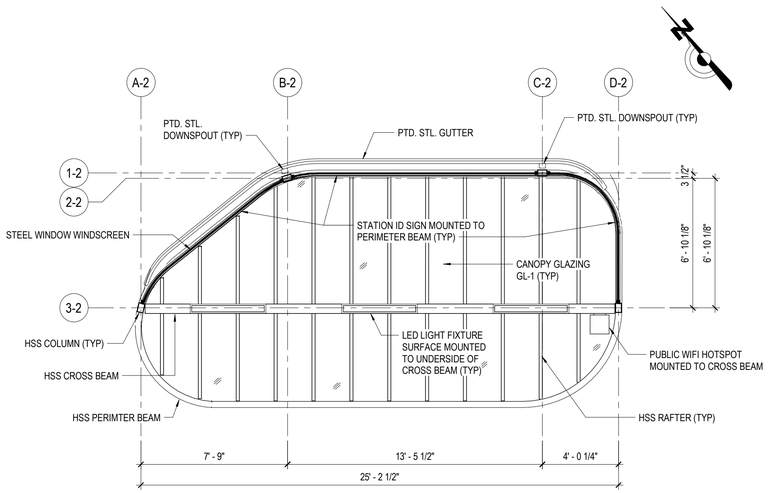

3 BUS SHELTER REFLECTED CEILING PLAN - MAGAZINE ST

1/4" = 1'-0"

0 2' 4' 8'

SCALE: 1/4" = 1' - 0"

CONFORMED SET

HDR ENGINEERING, INC.
99 HIGH STREET, SUITE 2300
BOSTON, MASSACHUSETTS 02110-2378
(617) 357-7700

REGISTERED ARCHITECT MICHAEL A. BASKIN No.4453 BOSTON MA COMMONWEALTH OF MASSACHUSETTS

Scale	AS NOTED			
Date	5/2/2022			
Job No.	10139379			
Designed by	BM / CS			
Drawn by	BM	0	CONFORMED SET	8/5/2022
Checked by	CS	No.	Description	Date
Approved by	MB	REVISIONS		

THE WORKS — CAMBRIDGE DEPARTMENT OF PUBLIC WORKS

Client	CITY OF CAMBRIDGE, MA	Sheet	A-102
Project	RIVER STREET INFRASTRUCTURE AND STREETSCAPE PROJECT	Total Sheets	381
Drawing	MAGAZINE ST SHELTER - PLANS	File No.	

NOTES:

1. DIMENSIONS ALONG THE WALLS REFER TO THE STRUCTURAL GRID OR CLEAR OPENINGS BETWEEN STEEL COLUMNS.
2. REFER TO STRUCTURAL DRAWINGS FOR SHELTER LOCATION WORKING POINTS AND GEOMETRY OF CANOPY.
3. REFER TO STRUCTURAL DRAWINGS FOR HSS AND STRUCTURAL STEEL MEMBERS.
4. REFER TO SHEET A-522 FOR LCD SCREEN AND FRAME DETAILS.
5. EXTEND DOWNSPOUTS BELOW GRADE AND CONNECT TO PROPOSED DRAIN INLET DPI-07. REFER TO SHEET C1.12 FOR DRAIN INLET LOCATION.
6. REFER TO SHEET A-101 FOR LEGEND.

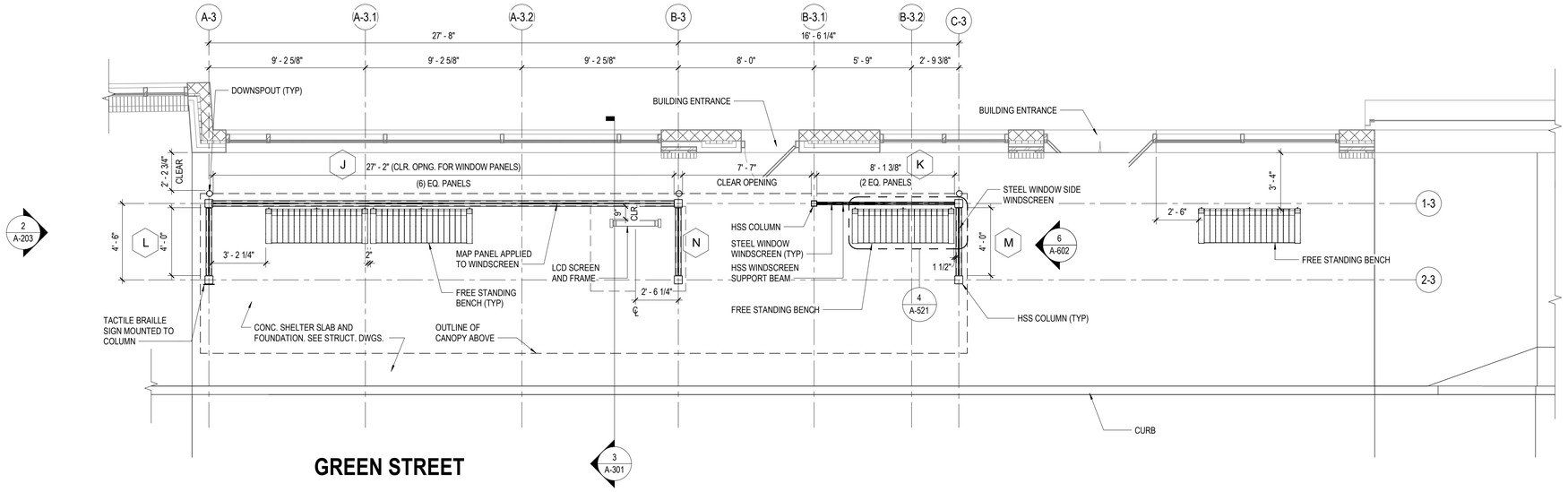

GREEN STREET

1 BUS SHELTER PLAN - GREEN ST

1/4" = 1'-0"

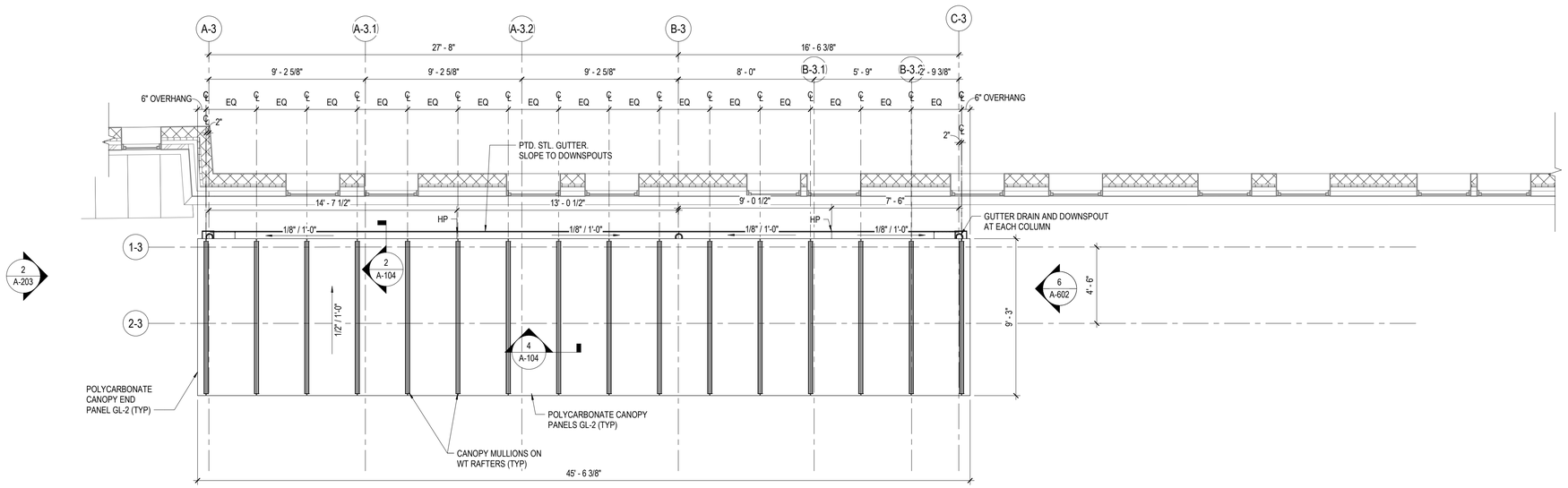

GREEN STREET

2 BUS SHELTER ROOF PLAN - GREEN ST

1/4" = 1'-0"

0 2' 4' 8'

SCALE: 1/4" = 1' - 0"

ISSUED FOR BID

HDR ENGINEERING, INC.
99 HIGH STREET, SUITE 2300
BOSTON, MASSACHUSETTS 02110-2378
(617) 357-7700

REGISTERED ARCHITECT MICHAEL A. BOSTON No.4453 BOSTON MA COMMONWEALTH OF MASSACHUSETTS

Scale	AS NOTED
Date	5/2/2022
Job No.	10139379
Designed by	BM / CS
Drawn by	BM
Checked by	CS
Approved by	MB

No.	Description	Date
	REVISIONS	

THE WORKS — CAMBRIDGE DEPARTMENT OF PUBLIC

Client	CITY OF CAMBRIDGE, MA
Project	RIVER STREET INFRASTRUCTURE AND STREETSCAPE PROJECT
Drawing	GREEN ST SHELTER - PLANS
Sheet	A-103
Total Sheets	381
File No.	

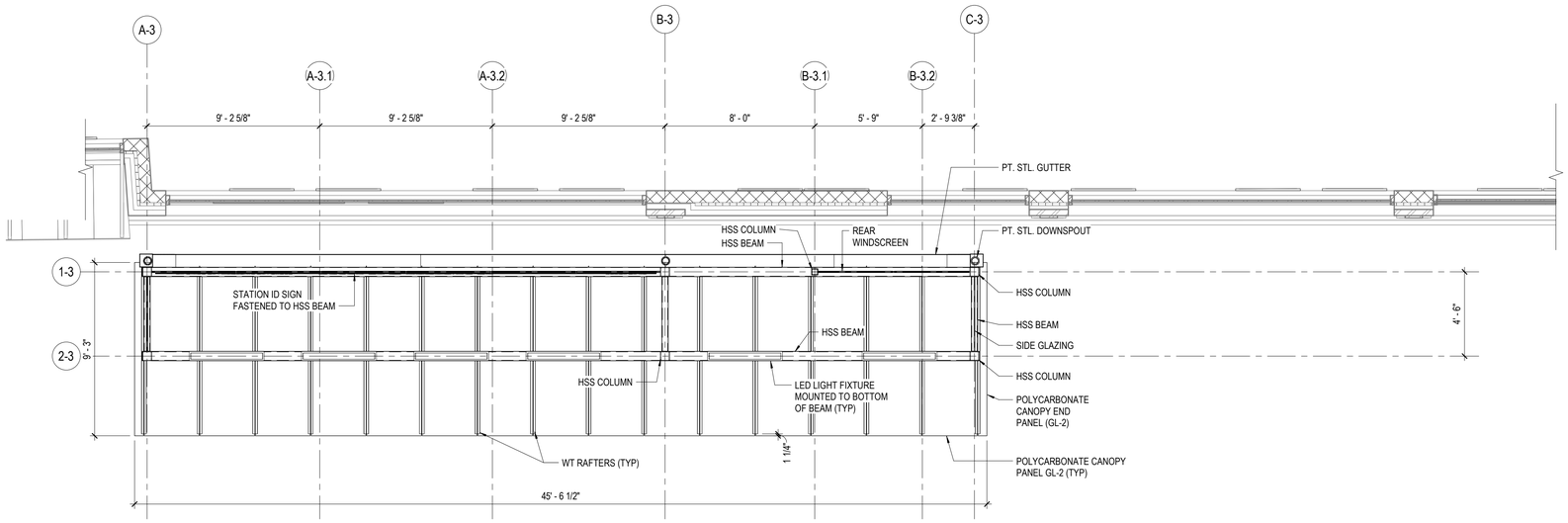

1 BUS SHELTER REFLECTED CEILING PLAN - GREEN ST

1/4" = 1'-0"

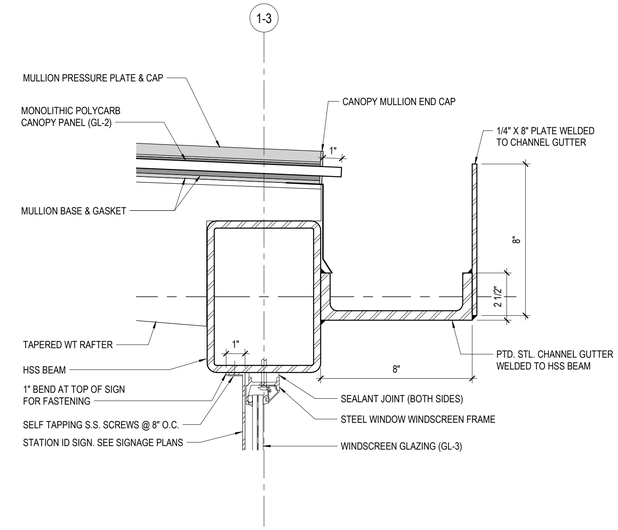

2 GREEN ST GUTTER AND WINDSCREEN HEAD DETAIL

3" = 1'-0"

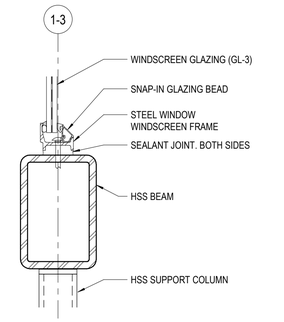

3 GREEN STREET SHELTER WINDSCREEN SILL DETAIL

3" = 1'-0"

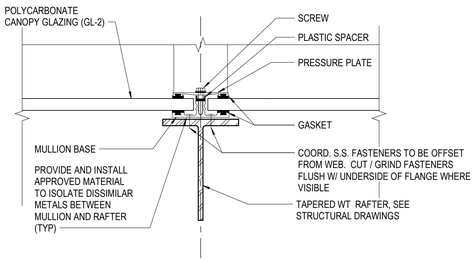

4 ROOF CANOPY DETAIL AT MULLION - GREEN ST SHELTER

3" = 1'-0"

0 2' 4' 8'

SCALE: 1/4" = 1' - 0"

ISSUED FOR BID

HDR ENGINEERING, INC.
99 HIGH STREET, SUITE 2300
BOSTON, MASSACHUSETTS 02110-2378
(617) 357-7700

REGISTERED ARCHITECT MICHAEL A. BROWN No.4453 BOSTON MA COMMONWEALTH OF MASSACHUSETTS

Scale	AS NOTED
Date	5/2/2022
Job No.	10139379
Designed by	BM / CS
Drawn by	BM
Checked by	CS
Approved by	MB

No.	Description	Date
	REVISIONS	

THE WORKS — CAMBRIDGE DEPARTMENT OF PUBLIC WORKS

Client	CITY OF CAMBRIDGE, MA
Project	RIVER STREET INFRASTRUCTURE AND STREETSCAPE PROJECT
Drawing	GREEN ST REFLECTED CEILING PLAN
Sheet	A-104
Total Sheets	381
File No.	

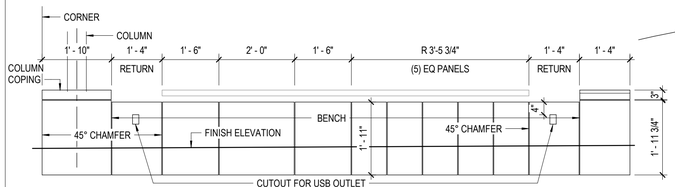

A RIVER ST SHELTER STONE LAYOUT ELEVATION
1/2" = 1'-0"

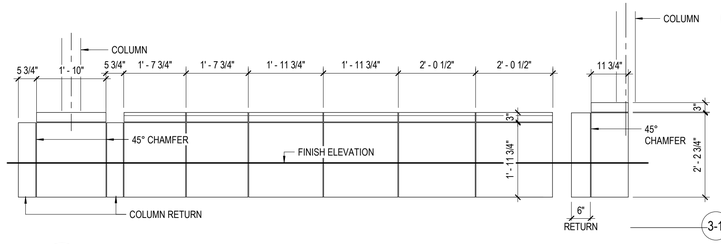

B RIVER ST SHELTER STONE LAYOUT ELEVATION
1/2" = 1'-0"

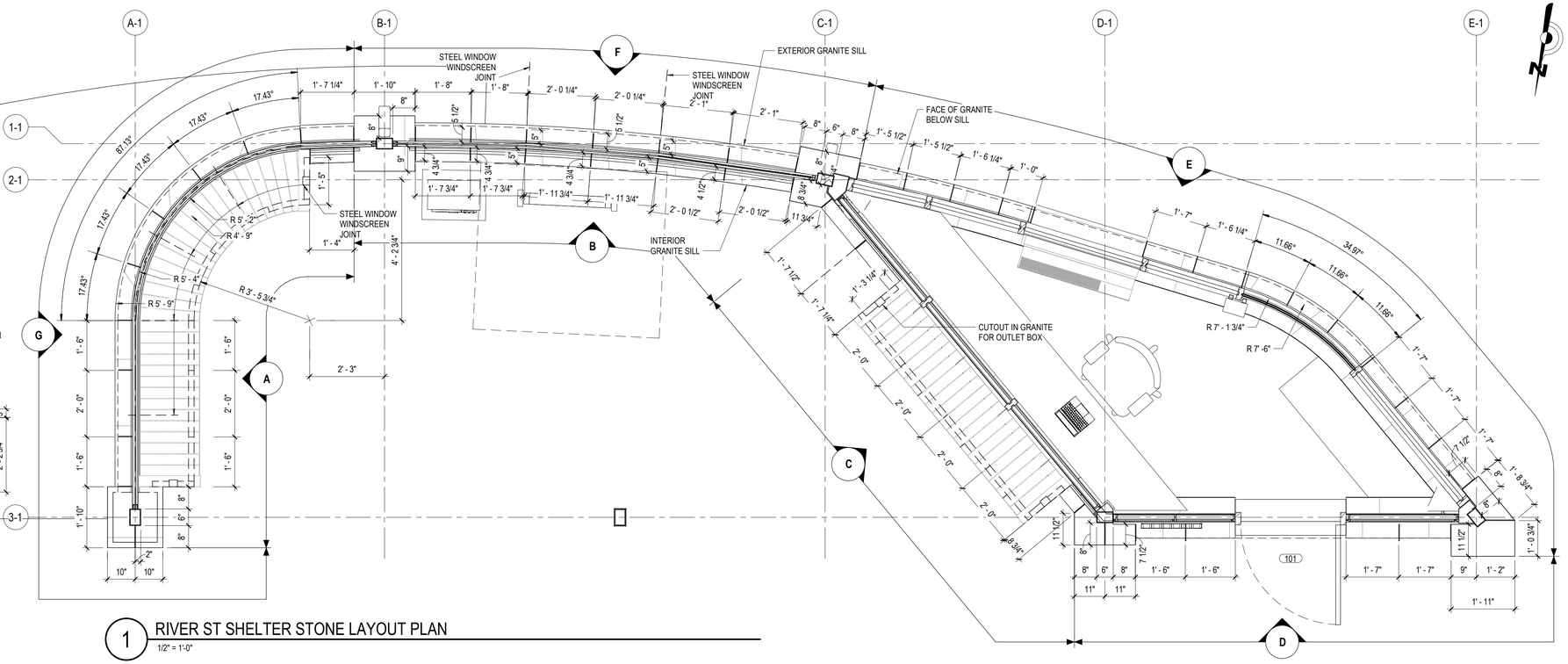

1 RIVER ST SHELTER STONE LAYOUT PLAN
1/2" = 1'-0"

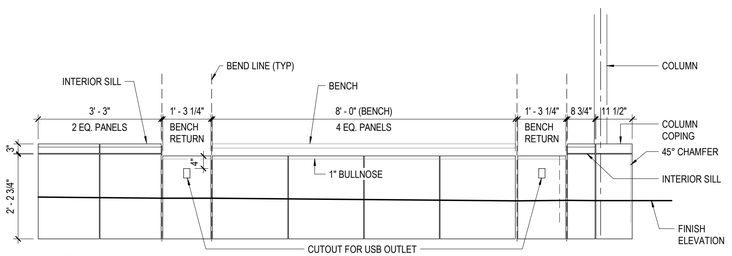

C RIVER ST SHELTER STONE LAYOUT ELEVATION
1/2" = 1'-0"

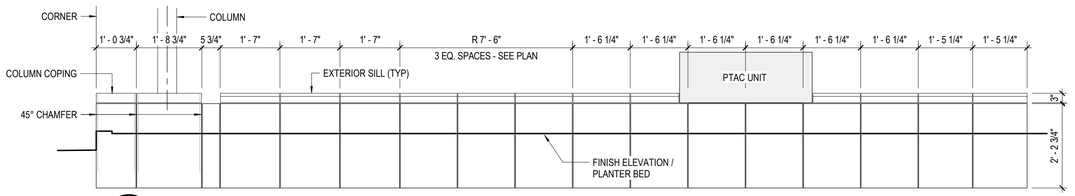

E RIVER ST SHELTER STONE LAYOUT ELEVATION
1/2" = 1'-0"

NOTES:

1. ALL DIMENSIONS ARE CENTER TO CENTER AT JOINTS
2. 45° CHAMFER NOTE IS WHERE TWO STONES MEET AT CORNER
3. 1 1/2" STONE THICKNESS
4. WINDSCREEN AND THERMAL STEEL WINDOWS NOT SHOWN ON ELEVATIONS FOR CLARITY
5. SEE 600 SERIES FOR WINDSCREEN AND STOREFRONT DETAILS
6. SEE SHEET A-101 FOR WINDSCREEN AND STOREFRONT PLAN DIMENSIONS

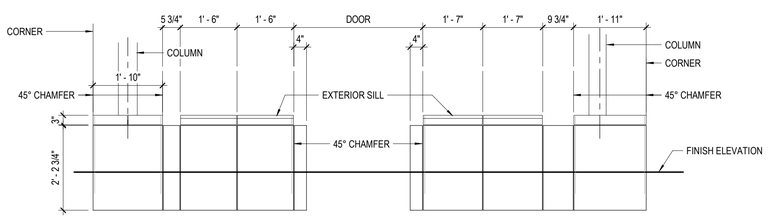

D RIVER ST SHELTER STONE LAYOUT ELEVATION
1/2" = 1'-0"

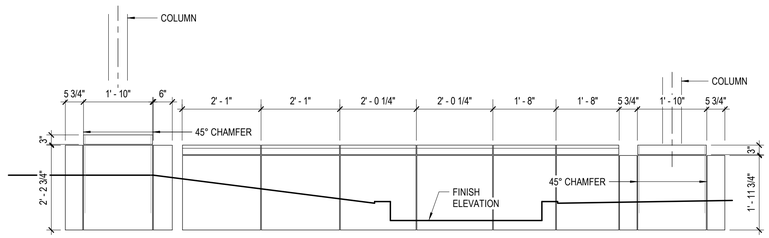

F RIVER ST SHELTER STONE LAYOUT ELEVATION
1/2" = 1'-0"

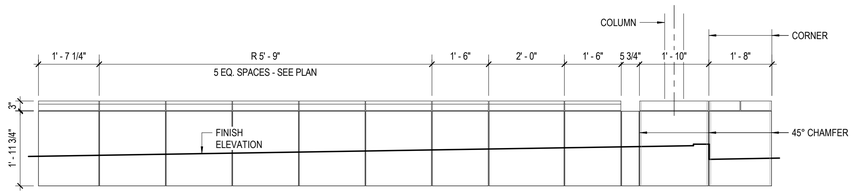

G RIVER ST SHELTER STONE LAYOUT ELEVATION
1/2" = 1'-0"

0 1' 2' 4'
SCALE: 1/2" = 1' - 0"

ISSUED FOR BID

HDR ENGINEERING, INC.
99 HIGH STREET, SUITE 2300
BOSTON, MASSACHUSETTS 02110-2378
(617) 357-7700

REGISTERED ARCHITECT MICHAEL A. BASKIN No.4453 BOSTON MA COMMONWEALTH OF MASSACHUSETTS

Scale	AS NOTED
Date	5/2/2022
Job No.	10139379
Designed by	BM / CS
Drawn by	BM
Checked by	CS
Approved by	MB

No.	Description	Date
	REVISIONS	

THE WORKS — CAMBRIDGE DEPARTMENT OF PUBLIC WORKS

Client	CITY OF CAMBRIDGE, MA
Project	RIVER STREET INFRASTRUCTURE AND STREETSCAPE PROJECT
Drawing	RIVER ST SHELTER - STONE LAYOUT PLAN AND ELEVATIONS
Sheet	A-111
Total Sheets	381
File No.	

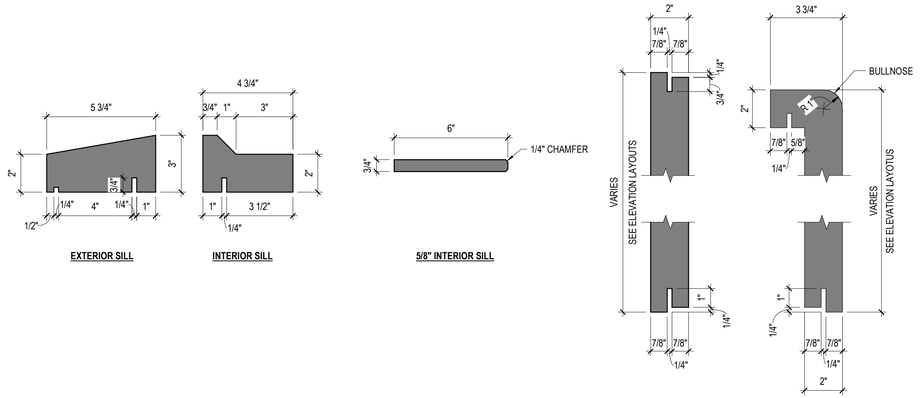

TYPICAL GRANITE PROFILES

3" = 1'-0"

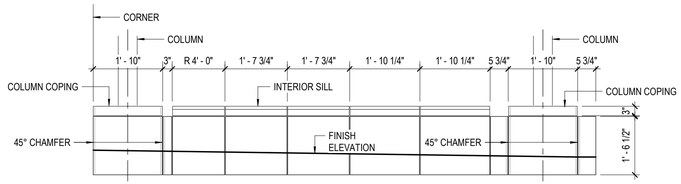

A MAGAZINE ST SHELTER STONE LAYOUT ELEVATION

1/2" = 1'-0"

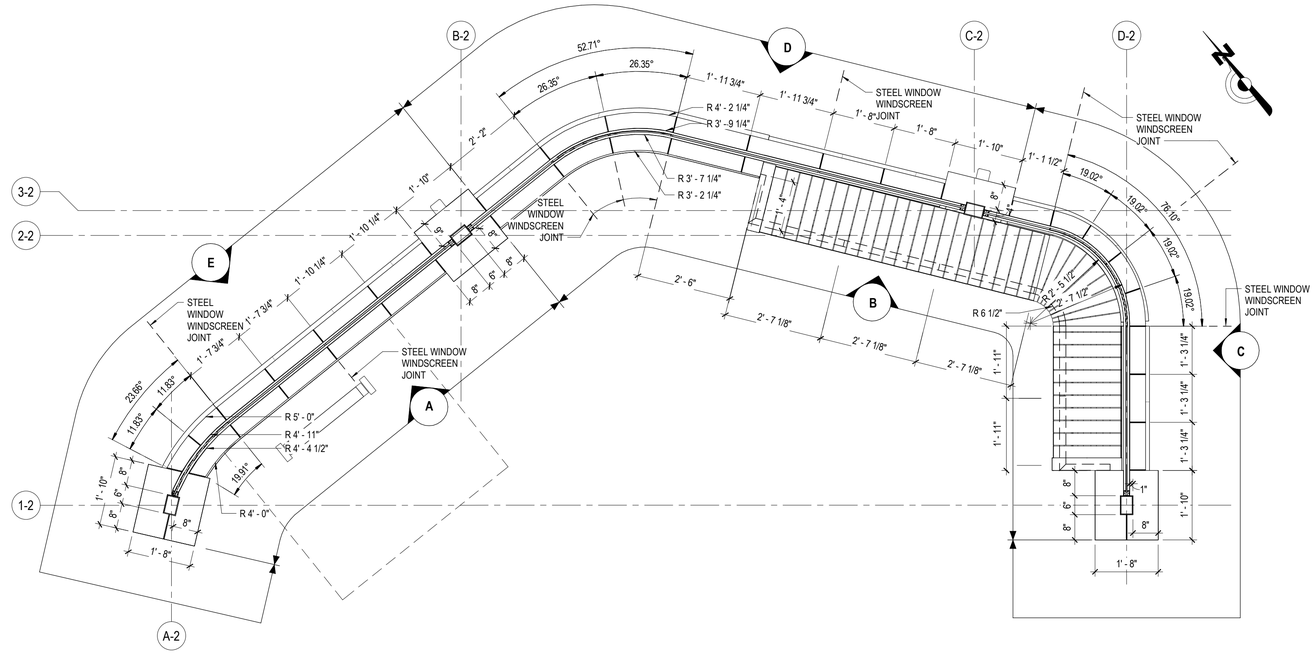

1 MAGAZINE ST SHELTER STONE LAYOUT PLAN

1/2" = 1'-0"

NOTES:

1. ALL DIMENSIONS ARE CENTER TO CENTER AT JOINTS
2. 45° CHAMFER NOTE IS WHERE TWO STONES MEET AT CORNER
3. 1 1/2" STONE THICKNESS
4. WINDSCREEN AND THERMAL STEEL WINDOWS NOT SHOWN ON ELEVATIONS FOR CLARITY
5. SEE 600 SERIES FOR WINDSCREEN DETAILS
6. SEE SHEET A-102 FOR WINDSCREEN PLAN DIMENSIONS

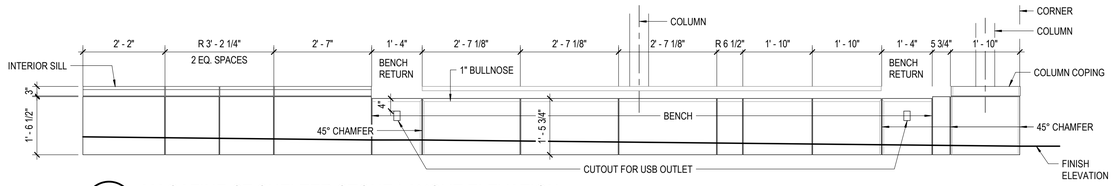

B MAGAZINE ST SHELTER STONE LAYOUT ELEVATION

1/2" = 1'-0"

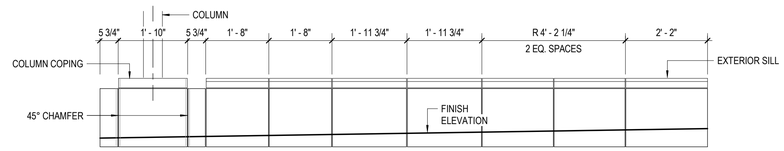

D MAGAZINE ST SHELTER STONE LAYOUT ELEVATION

1/2" = 1'-0"

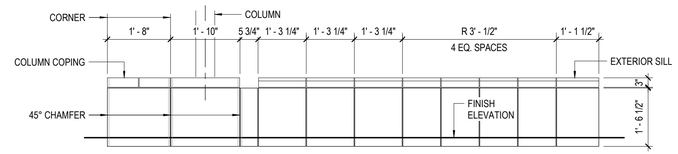

C MAGAZINE ST SHELTER STONE LAYOUT ELEVATION

1/2" = 1'-0"

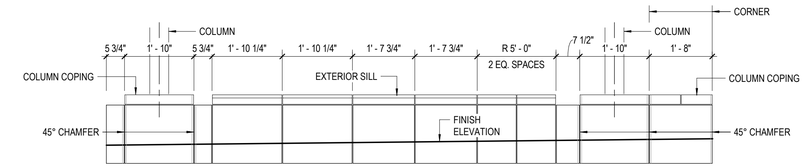

E MAGAZINE ST SHELTER STONE LAYOUT ELEVATION

1/2" = 1'-0"

0 1' 2' 4'

SCALE: 1/2" = 1' - 0"

ISSUED FOR BID

HDR ENGINEERING, INC.
99 HIGH STREET, SUITE 2300
BOSTON, MASSACHUSETTS 02110-2378
(617) 357-7700

REGISTERED ARCHITECT MICHAEL A. BASSETTI No.44531 BOSTON MA COMMONWEALTH OF MASSACHUSETTS

Scale	AS NOTED
Date	5/2/2022
Job No.	10139379
Designed by	BM / CS
Drawn by	BM
Checked by	CS
Approved by	MB

No.	Description	Date
	REVISIONS	

THE WORKS — CAMBRIDGE DEPARTMENT OF PUBLIC WORKS

Client	CITY OF CAMBRIDGE, MA	Sheet A-112
Project	RIVER STREET INFRASTRUCTURE AND STREETSCAPE PROJECT	Total Sheets 381
Drawing	MAGAZINE ST SHELTER - STONE LAYOUT PLAN AND ELEVATIONS	File No.

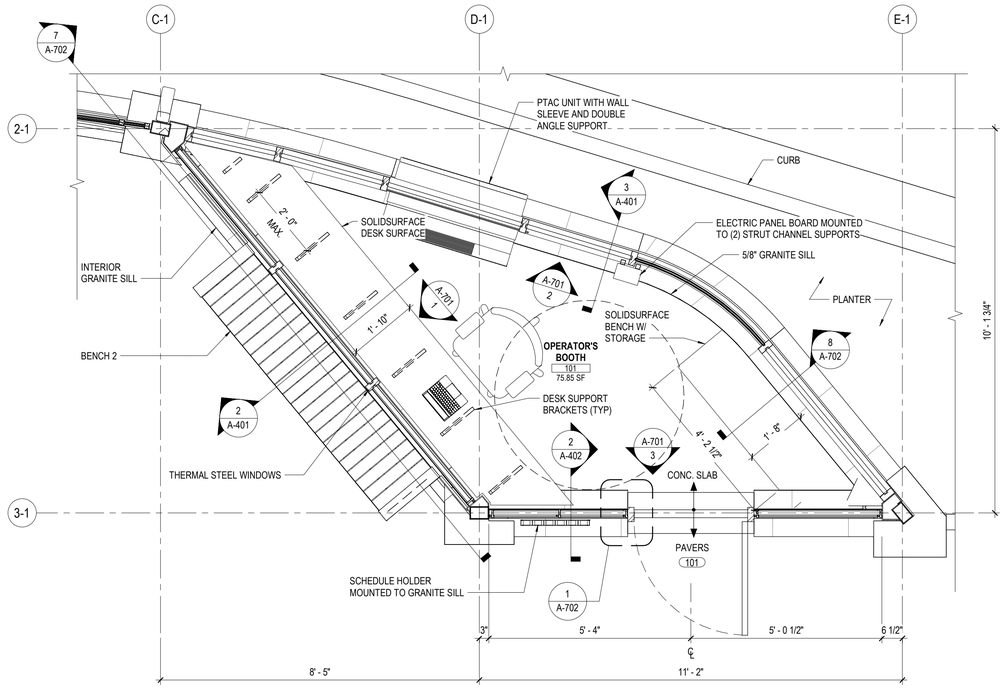

1 BUS SHELTER ENLARGED PLAN - RIVER ST

1/2" = 1'-0"

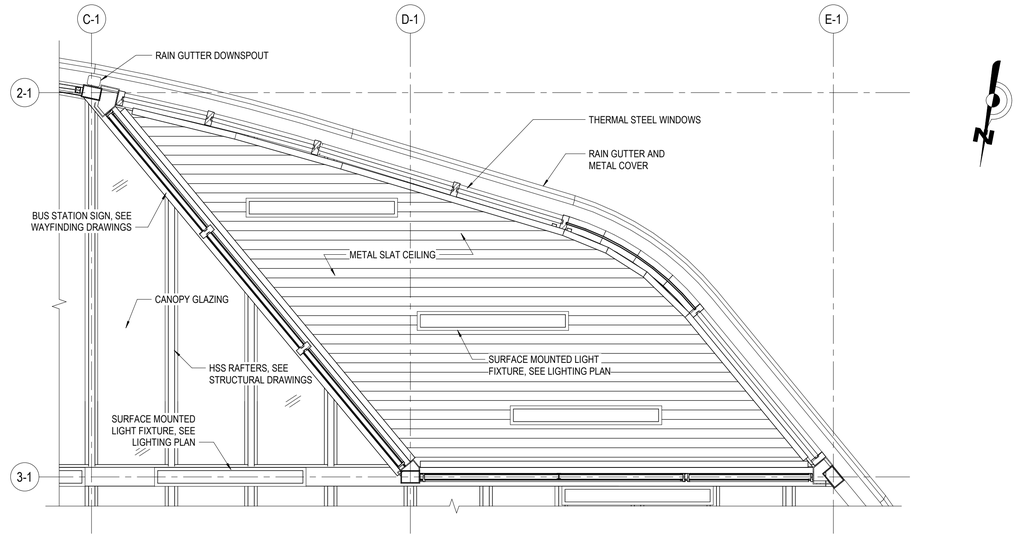

2 RIVER ST BOOTH REFLECTED CEILING PLAN

1/2" = 1'-0"

BOOTH NOTES:

1. ROOM FINISHES SHALL BE AS FOLLOWS:
   A. FLOOR: EPOXY PAINTED CONCRETE
   B. WALL BASE: S.S. REVEAL JOINT
   C. WALL (LOWER): PAINTED GYPSUM BOARD
   D. WALL (UPPER): THERMAL STEEL WINDOWS (FACTORY FINISHED)
   E. CEILING: METAL SLAT CEILING

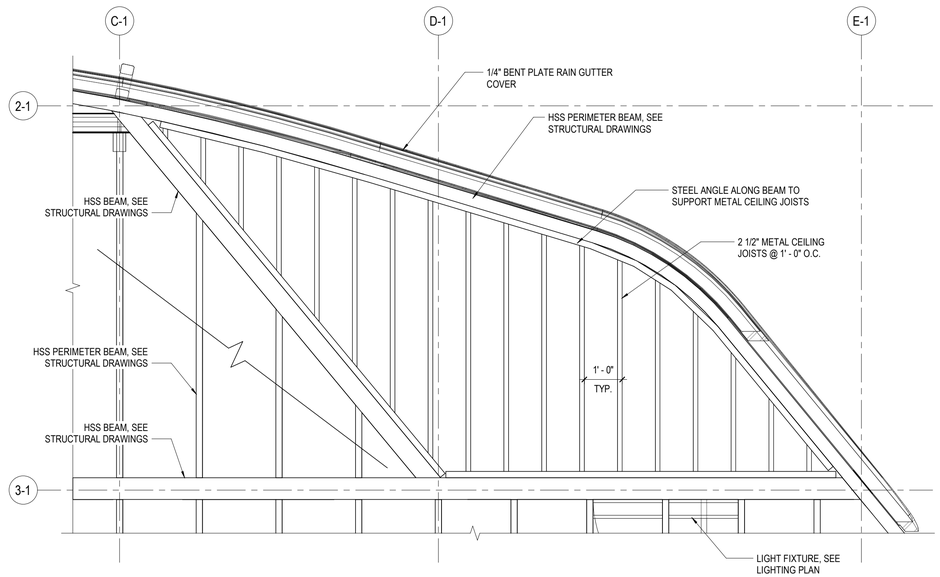

3 BOOTH CEILING FRAMING PLAN

1/2" = 1'-0"

0 1' 2' 4'

SCALE: 1/2" = 1' - 0"

ISSUED FOR BID

HDR ENGINEERING, INC.
99 HIGH STREET, SUITE 2300
BOSTON, MASSACHUSETTS 02110-2378
(617) 357-7700

REGISTERED ARCHITECT
MICHAEL A. BASKIN
No. 4453
BOSTON
MA
COMMONWEALTH OF MASSACHUSETTS

Scale	AS NOTED
Date	5/2/2022
Job No.	10139379
Designed by	BM / CS
Drawn by	BM
Checked by	CS
Approved by	MB

No.	Description	Date
	REVISIONS	

THE WORKS — CAMBRIDGE DEPARTMENT OF PUBLIC WORKS

Client	CITY OF CAMBRIDGE, MA	Sheet A-121
Project	RIVER STREET INFRASTRUCTURE AND STREETSCAPE PROJECT	Total Sheets 381
Drawing	BOOTH PLAN, RCP AND CEILING FRAMING PLAN	File No.

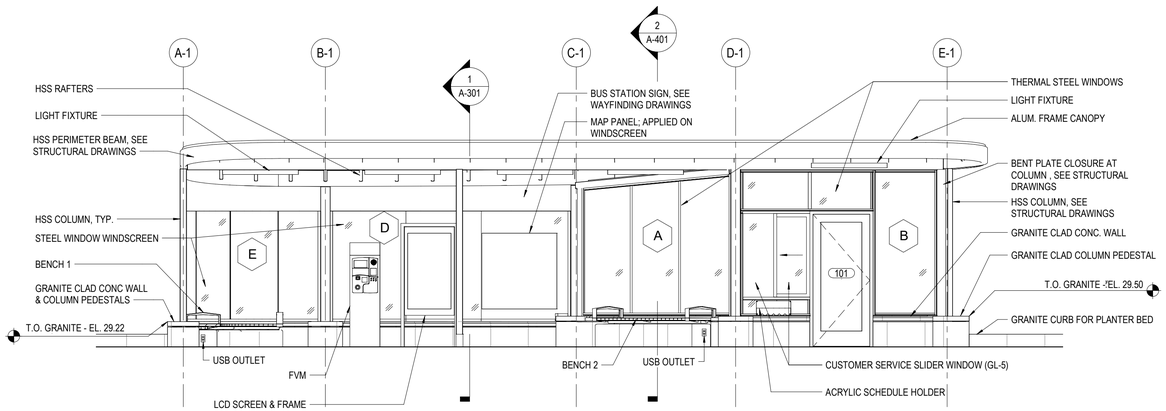

1 BUS SHELTER ELEVATION - RIVER ST - SOUTH
1/4" = 1'-0"

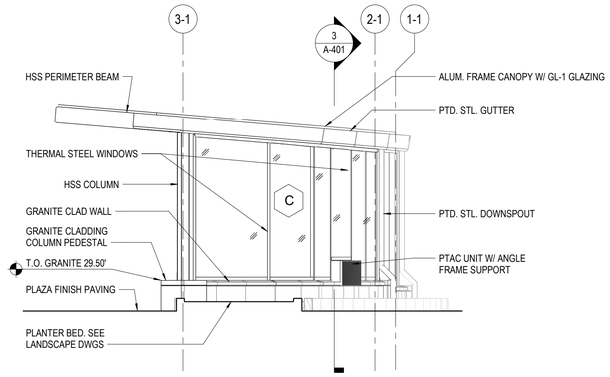

2 BUS SHELTER ELEVATION - RIVER ST - EAST
1/4" = 1'-0"

3 BUS SHELTER ELEVATION - RIVER ST - NORTH
1/4" = 1'-0"

4 BUS SHELTER ELEVATION - RIVER ST - WEST
1/4" = 1'-0"

0 2' 4' 8'
SCALE: 1/4" = 1' - 0"

ISSUED FOR BID

HDR ENGINEERING, INC.
99 HIGH STREET, SUITE 2300
BOSTON, MASSACHUSETTS 02110-2378
(617) 357-7700

REGISTERED ARCHITECT MICHAEL A. BASKIN No.4453 BOSTON MA COMMONWEALTH OF MASSACHUSETTS

Scale	AS NOTED			
Date	5/2/2022			
Job No.	10139379			
Designed by	BM / CS			
Drawn by	BM			
Checked by	CS	No.	Description	Date
Approved by	MB	REVISIONS		

THE WORKS — CAMBRIDGE DEPARTMENT OF PUBLIC WORKS

Client	CITY OF CAMBRIDGE, MA	Sheet A-201
Project	RIVER STREET INFRASTRUCTURE AND STREETSCAPE PROJECT	Total Sheets 381
Drawing	BUS SHELTER ELEVATIONS - RIVER ST	File No.

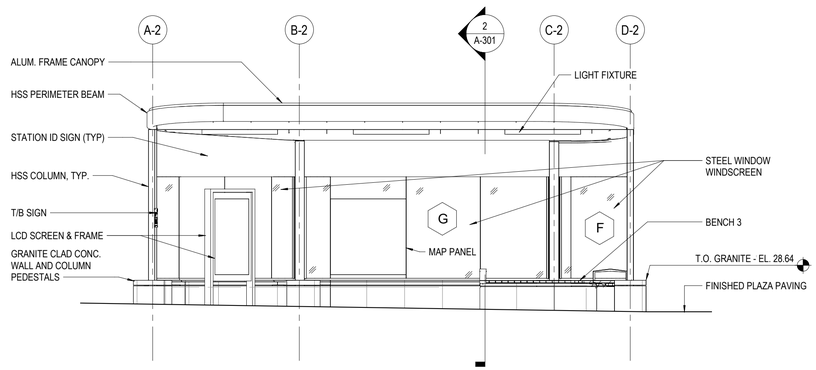

1 MAGAZINE ST BUS SHELTER ELEVATION - NORTHEAST

1/4" = 1'-0"

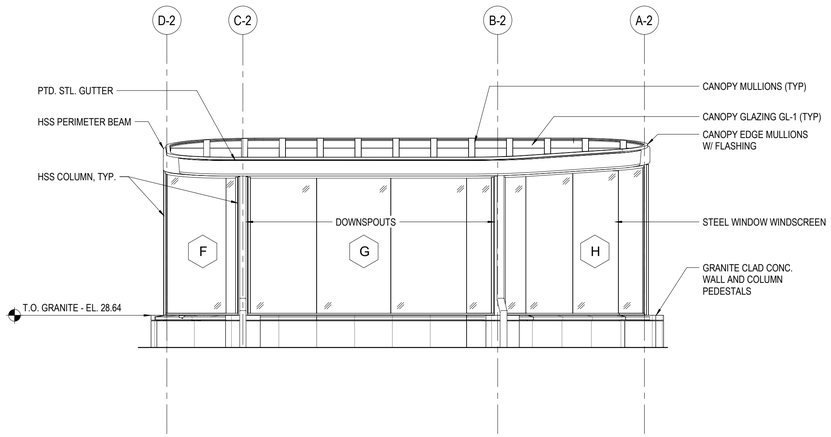

2 MAGAZINE ST BUS SHELTER ELEVATION - WEST

1/4" = 1'-0"

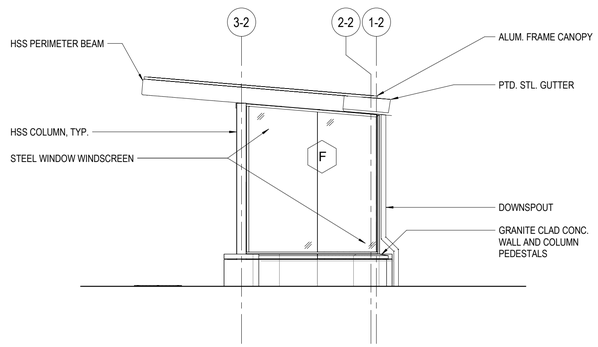

3 MAGAZINE ST BUS SHELTER ELEVATION - NORTHWEST

1/4" = 1'-0"

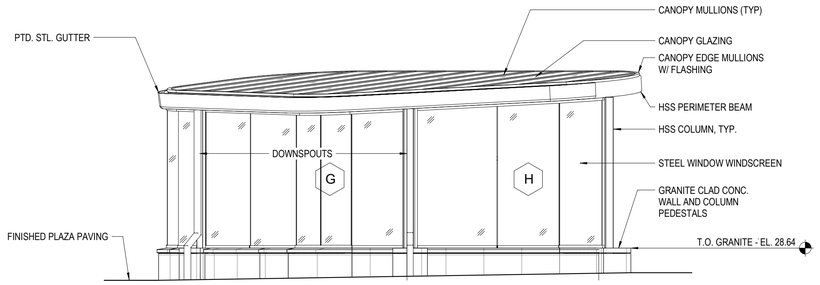

4 MAGAZINE ST BUS SHELTER ELEVATION - SOUTH

1/4" = 1'-0"

0 2' 4' 8'

SCALE: 1/4" = 1' - 0"

CONFORMED SET

HDR ENGINEERING, INC.
99 HIGH STREET, SUITE 2300
BOSTON, MASSACHUSETTS 02110-2378
(617) 357-7700

REGISTERED ARCHITECT MICHAEL A. BASKIN No.4453 BOSTON MA COMMONWEALTH OF MASSACHUSETTS

Scale	AS NOTED			
Date	5/2/2022			
Job No.	10139379			
Designed by	BM / CS			
Drawn by	BM	0	CONFORMED SET	8/5/2022
Checked by	CS	No.	Description	Date
Approved by	MB	REVISIONS		

THE CAMBRIDGE DEPARTMENT OF PUBLIC WORKS

Client	CITY OF CAMBRIDGE, MA	Sheet A-202
Project	RIVER STREET INFRASTRUCTURE AND STREETSCAPE PROJECT	Total Sheets 381
Drawing	BUS SHELTER ELEVATIONS - MAGAZINE ST	File No.

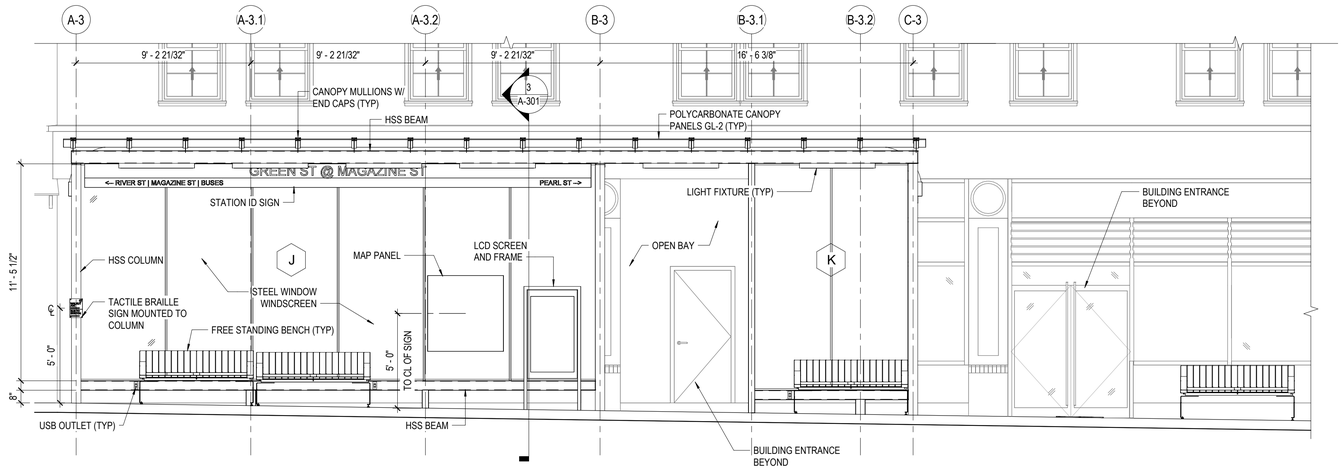

1 BUS SHELTER ELEVATION - GREEN ST - NORTHEAST

1/4" = 1'-0"

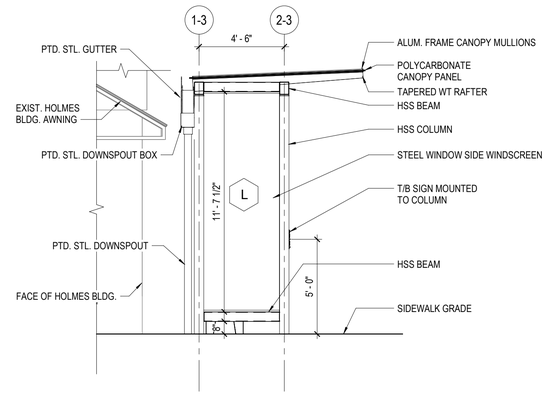

2 BUS SHELTER ELEVATION - GREEN ST - SOUTHEAST

1/4" = 1'-0"

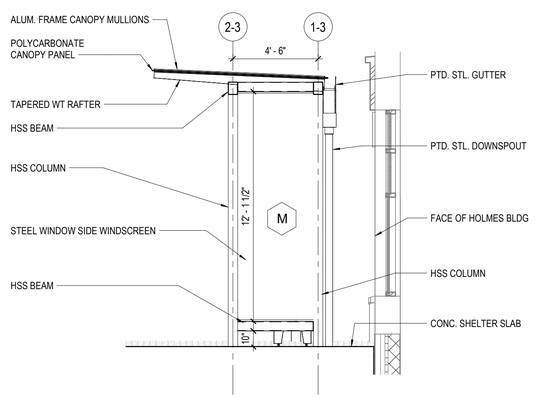

3 BUS SHELTER ELEVATION - GREEN ST - NORTHWEST

1/4" = 1'-0"

0 2' 4' 8'

SCALE: 1/4" = 1' - 0"

ISSUED FOR BID

HDR ENGINEERING, INC.
99 HIGH STREET, SUITE 2300
BOSTON, MASSACHUSETTS 02110-2378
(617) 357-7700

REGISTERED ARCHITECT MICHAEL A. BASKIN No.4453 BOSTON MA COMMONWEALTH OF MASSACHUSETTS

Scale	AS NOTED			
Date	5/2/2022			
Job No.	10139379			
Designed by	BM / CS			
Drawn by	BM			
Checked by	CS	No.	Description	Date
Approved by	MB	REVISIONS		

THE WORKS — CAMBRIDGE DEPARTMENT OF PUBLIC WORKS

Client	CITY OF CAMBRIDGE, MA	Sheet A-203
Project	RIVER STREET INFRASTRUCTURE AND STREETSCAPE PROJECT	Total Sheets 381
Drawing	BUS SHELTER ELEVATIONS - GREEN ST	File No.

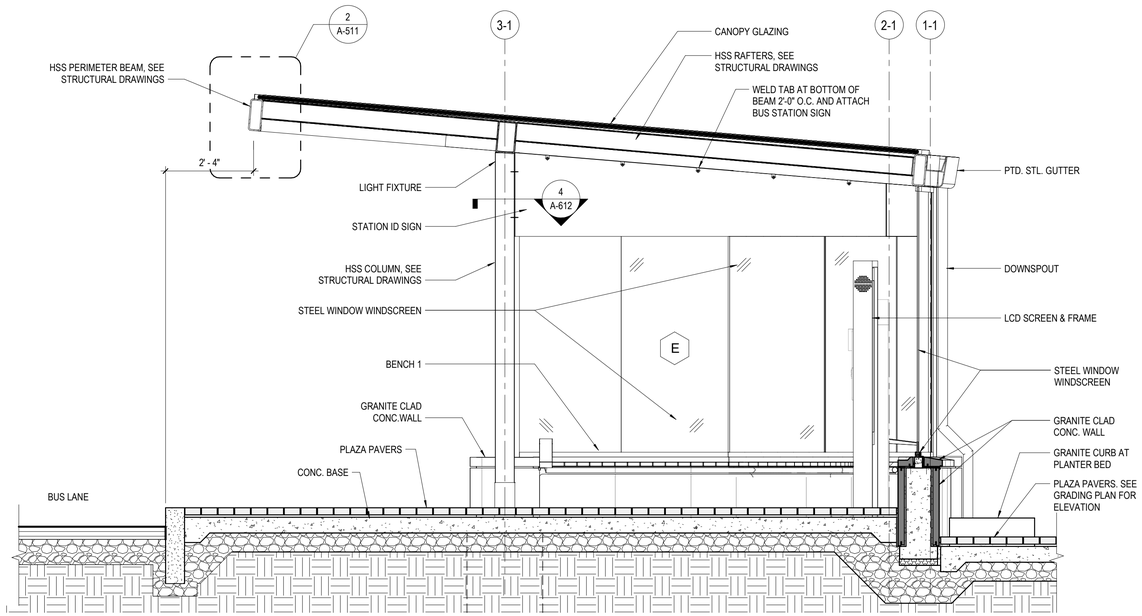

1 BUS SHELTER SECTION - RIVER ST
1/2" = 1'-0"

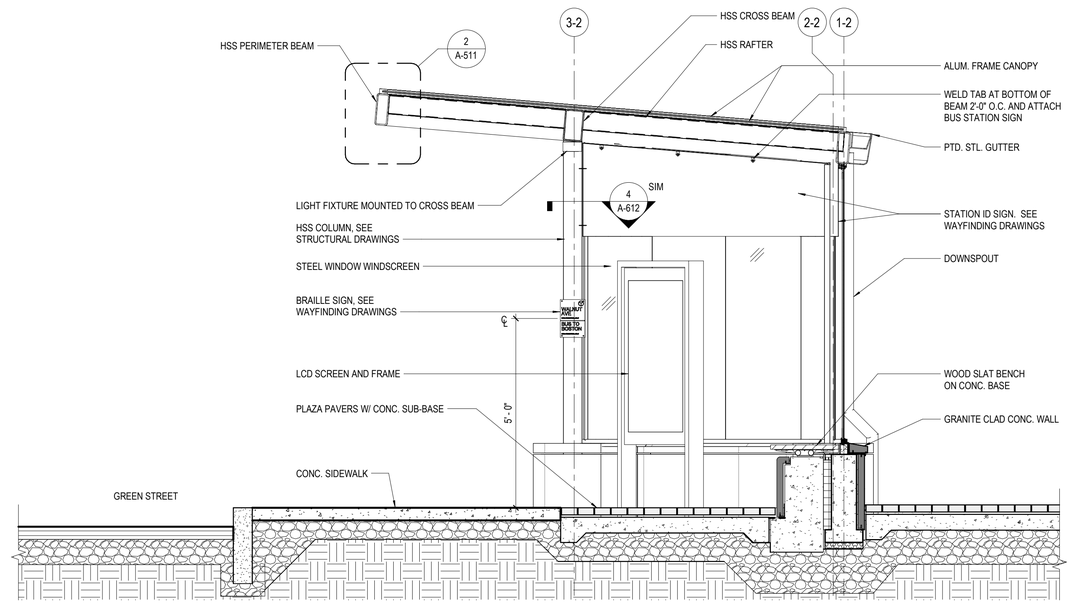

2 BUS SHELTER SECTION - MAGAZINE ST
1/2" = 1'-0"

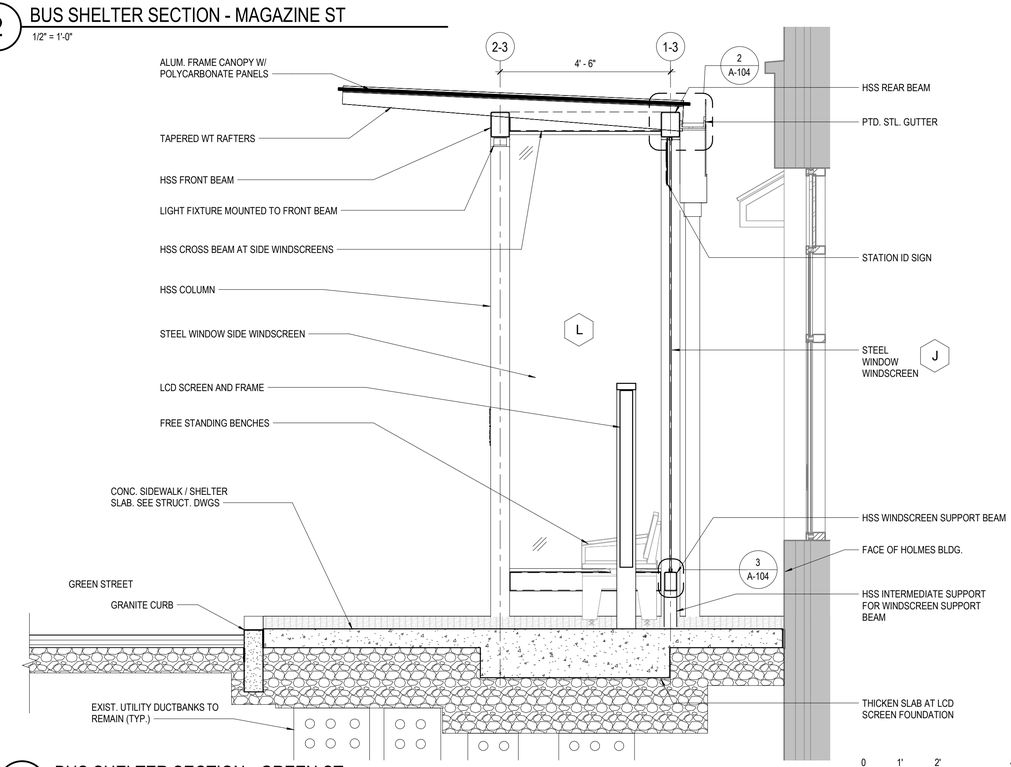

3 BUS SHELTER SECTION - GREEN ST
1/2" = 1'-0"

CONFORMED SET

HDR ENGINEERING, INC.
99 HIGH STREET, SUITE 2300
BOSTON, MASSACHUSETTS 02110-2378
(617) 357-7700

REGISTERED ARCHITECT
MICHAEL A. BASKIN
No. 4453
BOSTON, MA
COMMONWEALTH OF MASSACHUSETTS

Scale	AS NOTED
Date	5/2/2022
Job No.	10139379
Designed by	BM / CS
Drawn by	BM
Checked by	CS
Approved by	MB

No.	Description	Date
0	CONFORMED SET	8/5/2022

REVISIONS

THE WORKS
CAMBRIDGE DEPARTMENT OF PUBLIC

Client: CITY OF CAMBRIDGE, MA

Project: RIVER STREET
INFRASTRUCTURE AND STREETSCAPE PROJECT

Drawing: BUS SHELTER CROSS SECTIONS

Sheet: A-301

Total Sheets: 381

File No.

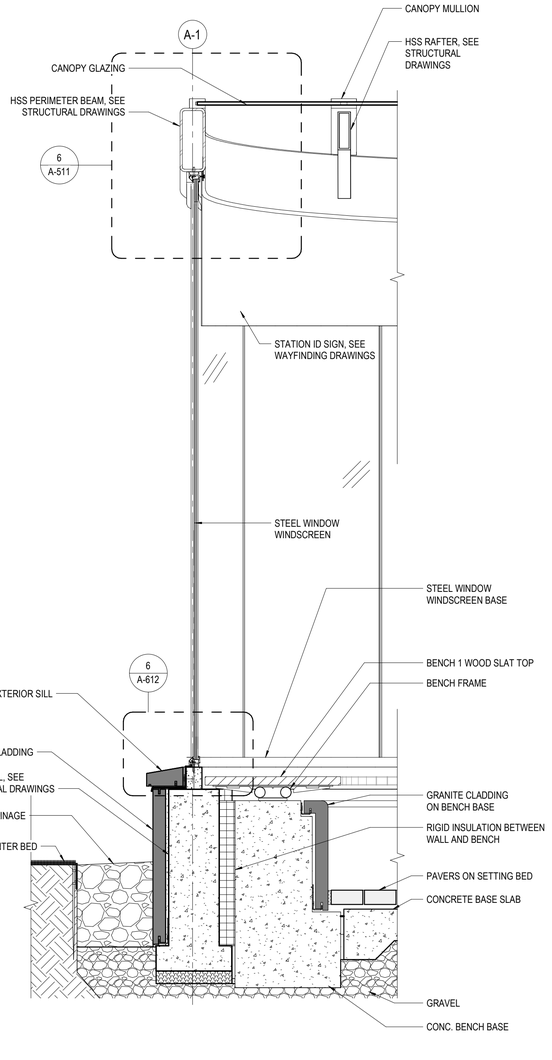

1 WALL SECTION AT RIVER ST BUS SHELTER

1" = 1'-0"

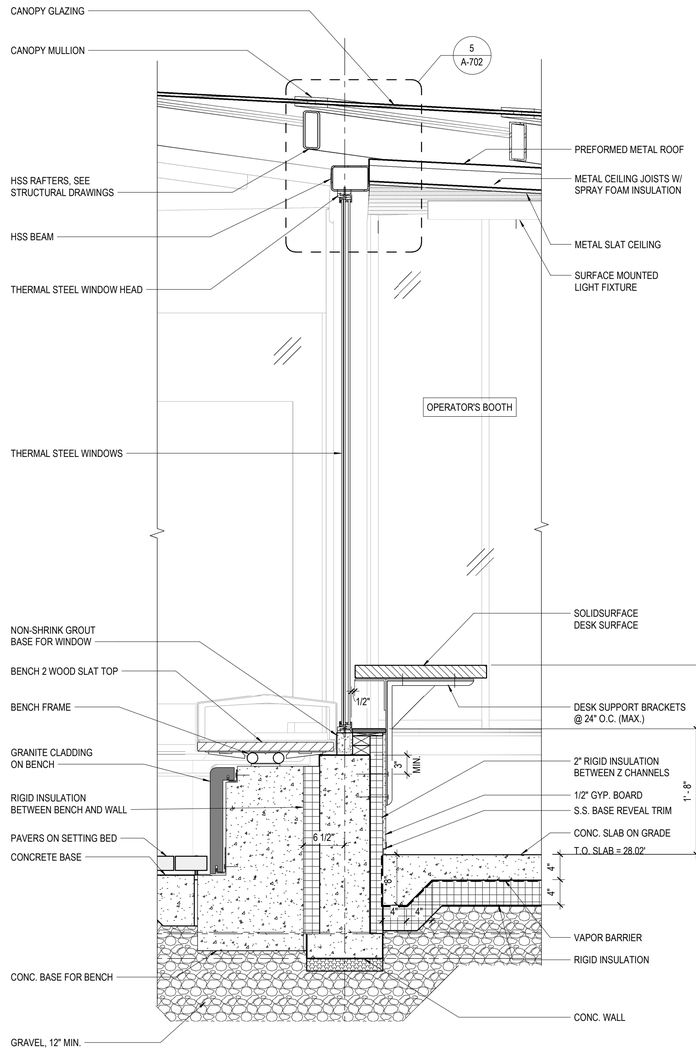

2 WALL SECTION AT RIVER ST BUS SHELTER

1" = 1'-0"

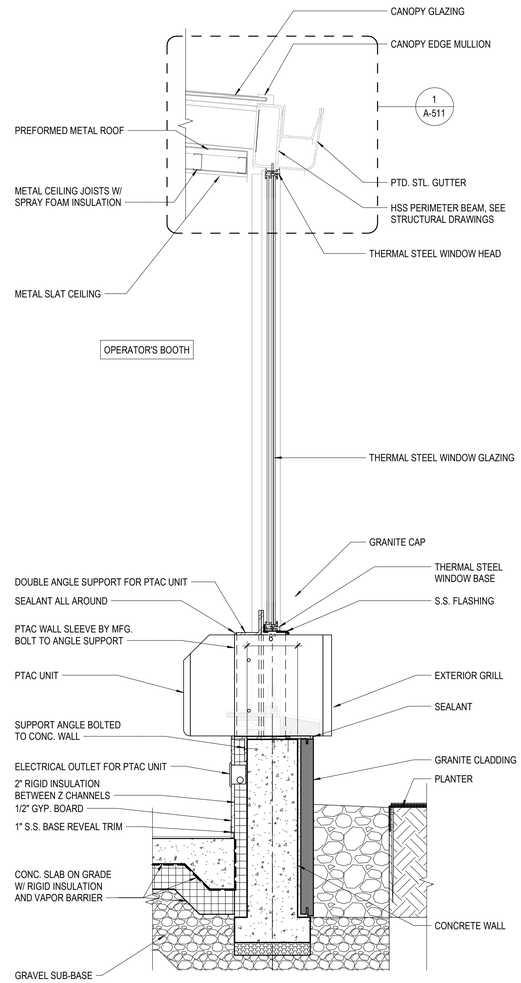

3 WALL SECTION AT RIVER ST BUS SHELTER

1" = 1'-0"

0 1" 2'

SCALE: 1" = 1' - 0"

ISSUED FOR BID

HDR ENGINEERING, INC.
99 HIGH STREET, SUITE 2300
BOSTON, MASSACHUSETTS 02110-2378
(617) 357-7700

REGISTERED ARCHITECT
MICHAEL A. BASKIN
No.4453
BOSTON
MA
COMMONWEALTH OF MASSACHUSETTS

Scale	AS NOTED
Date	5/2/2022
Job No.	10139379
Designed by	BM / CS
Drawn by	BM
Checked by	CS
Approved by	MB

No.	Description	Date
	REVISIONS	

THE WORKS — CAMBRIDGE DEPARTMENT OF PUBLIC

Client	CITY OF CAMBRIDGE, MA
Project	RIVER STREET INFRASTRUCTURE AND STREETSCAPE PROJECT
Drawing	BUS SHELTER WALL SECTIONS
Sheet	A-401
Total Sheets	381
File No.	

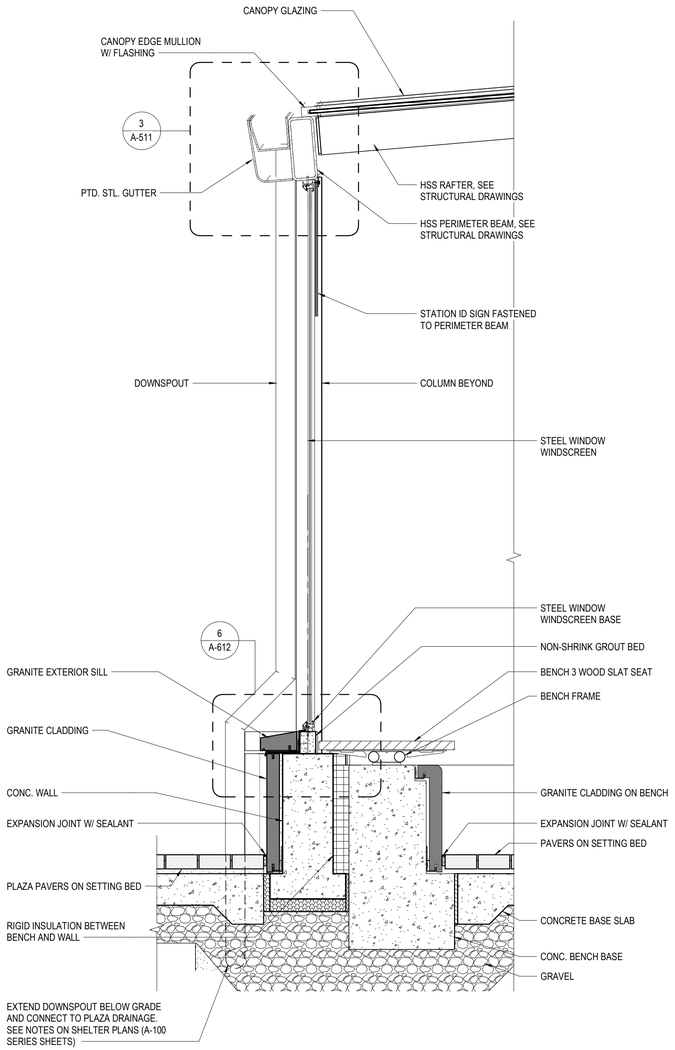

1 WALL SECTION AT MAGAZINE ST BUS SHELTER
1" = 1'-0"

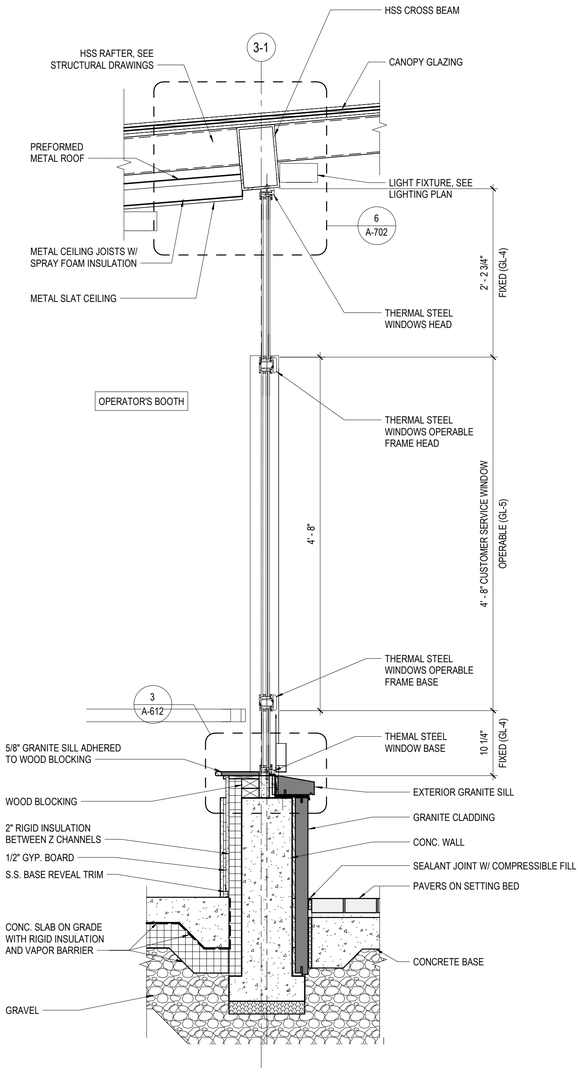

2 WALL SECTION AT RIVER ST BUS SHELTER
1" = 1'-0"

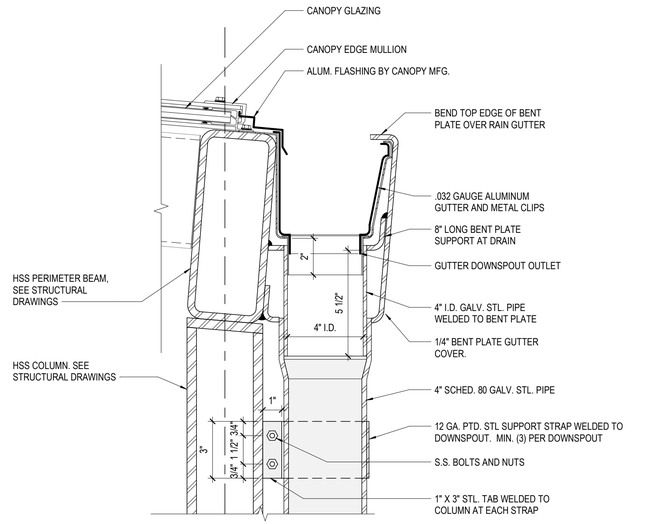

3 TYPICAL GUTTER DOWNSPOUT DETAIL
3" = 1'-0"

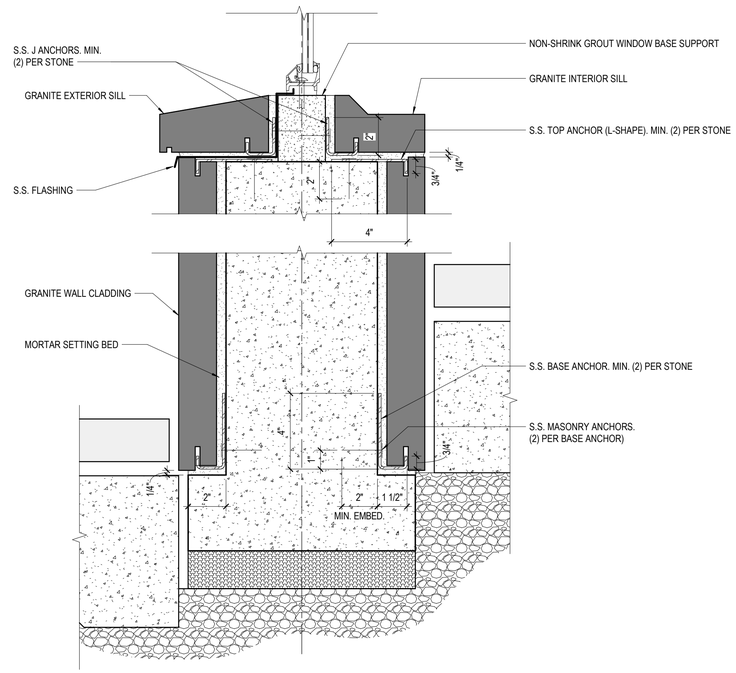

4 TYPICAL GRANITE CLADDING ANCHOR DETAIL
3" = 1'-0"

0 1' 2'
SCALE: 1" = 1' - 0"

ISSUED FOR BID

HDR ENGINEERING, INC.
99 HIGH STREET, SUITE 2300
BOSTON, MASSACHUSETTS 02110-2378
(617) 357-7700

REGISTERED ARCHITECT MICHAEL A. BASKIN No.4453 BOSTON MA COMMONWEALTH OF MASSACHUSETTS

Scale	AS NOTED
Date	5/2/2022
Job No.	10139379
Designed by	BM / CS
Drawn by	BM
Checked by	CS
Approved by	MB

No.	Description	Date
	REVISIONS	

THE WORKS — CAMBRIDGE DEPARTMENT OF PUBLIC WORKS

Client	CITY OF CAMBRIDGE, MA
Project	RIVER STREET INFRASTRUCTURE AND STREETSCAPE PROJECT
Drawing	BUS SHELTER WALL SECTIONS
Sheet	A-402
Total Sheets	381
File No.	

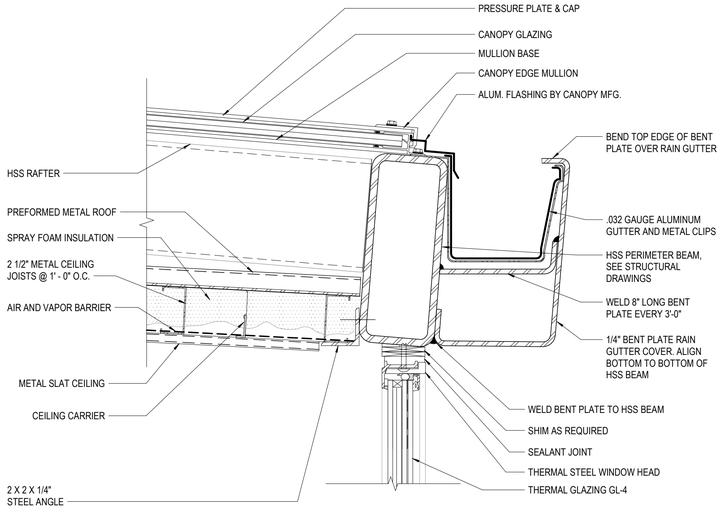

1 STOREFRONT HEAD DETAIL AT CANOPY
3" = 1'-0"

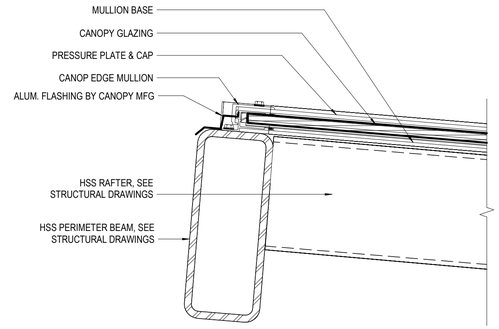

2 CANOPY DETAIL AT PERIMETER BEAM
3" = 1'-0"

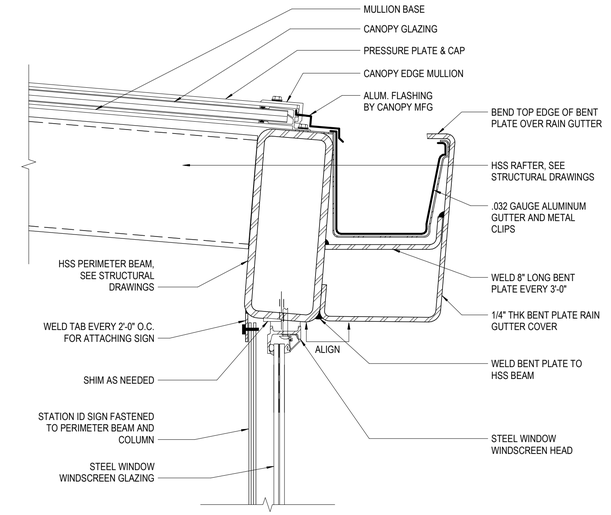

3 CANOPY DETAIL AT RAIN GUTTER
3" = 1'-0"

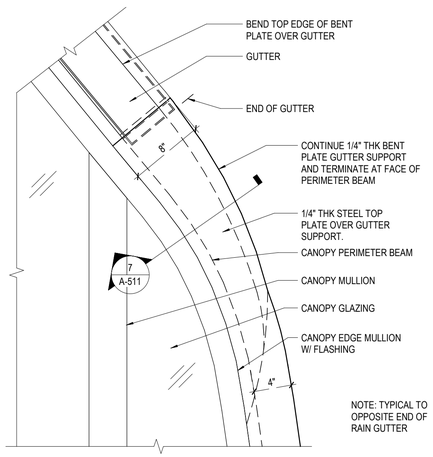

4 GUTTER TRANSITION DETAIL
1 1/2" = 1'-0"

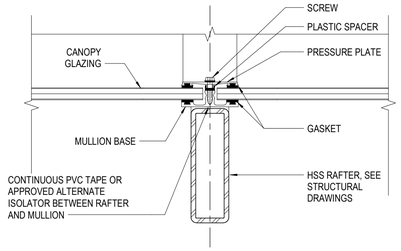

5 CANOPY DETAIL AT MULLION
3" = 1'-0"

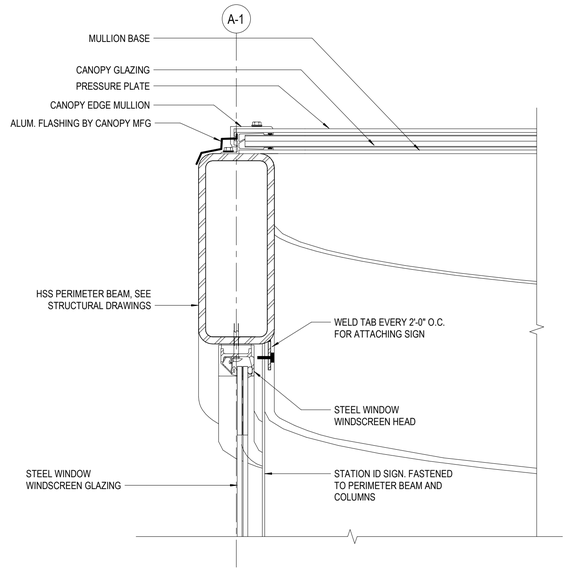

6 CANOPY DETAIL AT PERIMETER BEAM
3" = 1'-0"

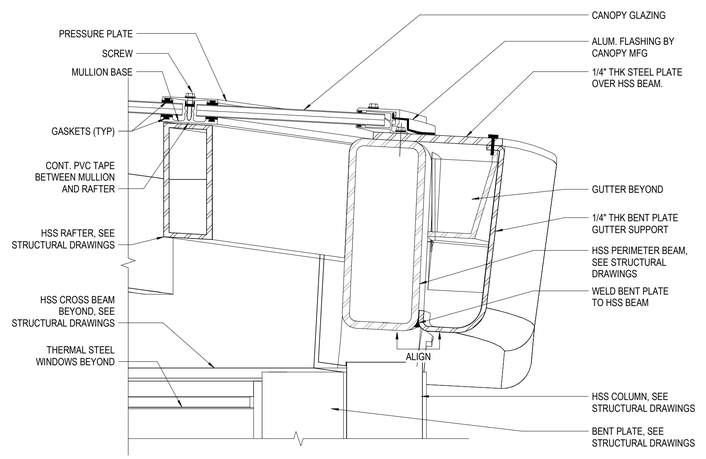

7 RAIN GUTTER SECTION - RIVER ST
3" = 1'-0"

0 1/2" 1" 1 1/2" 3"
SCALE: 1 1/2" = 1' - 0"

0 3" 6" 9" 1' - 0"
SCALE: 3" = 1' - 0"

ISSUED FOR BID

HDR ENGINEERING, INC.
99 HIGH STREET, SUITE 2300
BOSTON, MASSACHUSETTS 02110-2378
(617) 357-7700

REGISTERED ARCHITECT
MICHAEL A. BROWN
No. 4453
BOSTON MA
COMMONWEALTH OF MASSACHUSETTS

Scale	AS NOTED			
Date	5/2/2022			
Job No.	10139379			
Designed by	BM / CS			
Drawn by	BM			
Checked by	CS	No.	Description	Date
Approved by	MB		REVISIONS	

THE WORKS — CAMBRIDGE DEPARTMENT OF PUBLIC

Client	CITY OF CAMBRIDGE, MA	Sheet A-511
Project	RIVER STREET INFRASTRUCTURE AND STREETSCAPE PROJECT	Total Sheets 381
Drawing	CANOPY DETAILS	File No.

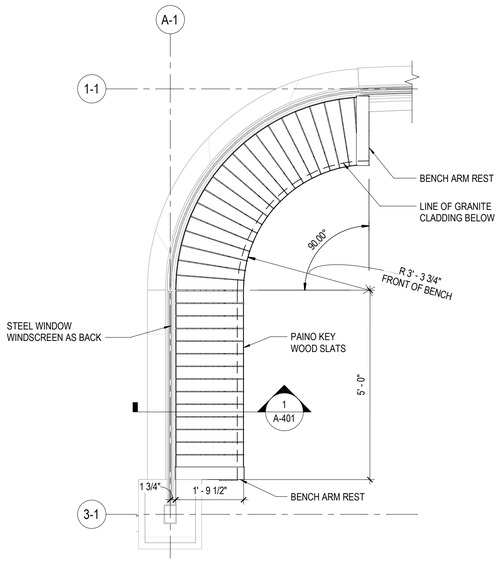

1 BENCH 1- ENLARGED PLAN - RIVER ST

1/2" = 1'-0"

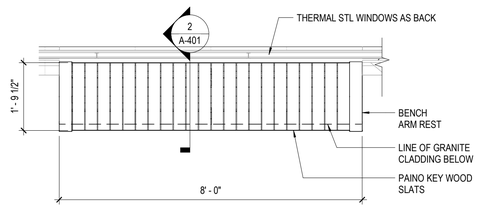

2 BENCH 2 - ENLARGED PLAN - RIVER ST

1/2" = 1'-0"

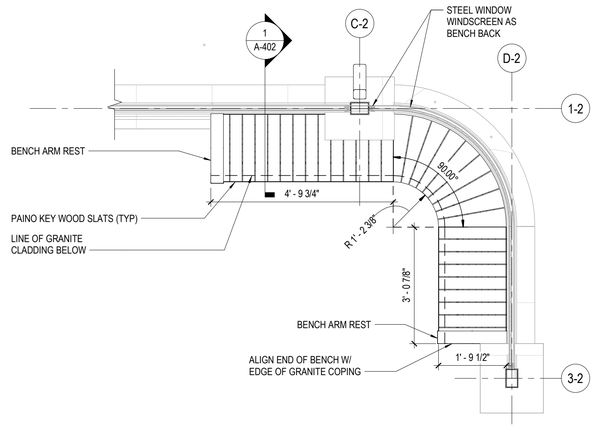

3 BENCH 3 - ENLARGED PLAN - MAGAZINE ST

1/2" = 1'-0"

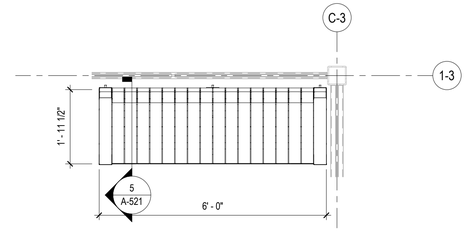

4 FREE STANDING BENCH PLAN

1/2" = 1'-0"

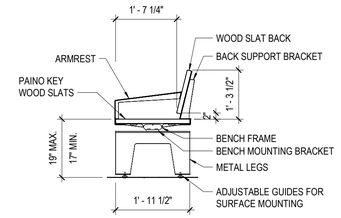

5 FREE STANDING BENCH SECTION

1/2" = 1'-0"

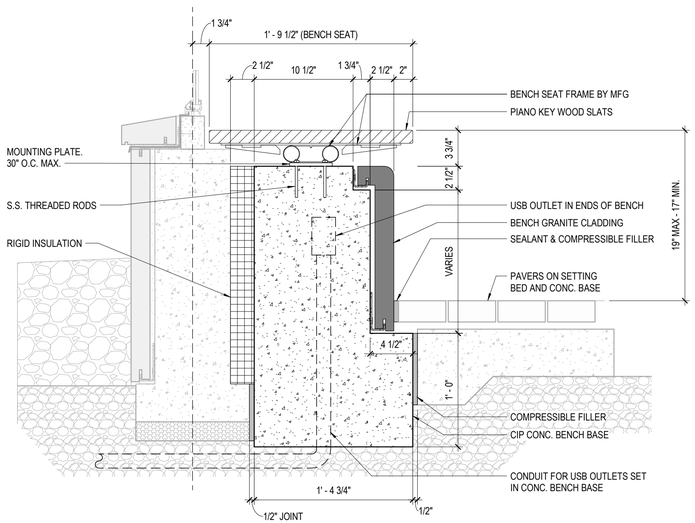

6 TYPICAL BENCH SECTION

1 1/2" = 1'-0"

0 1' 2' 4'

SCALE: 1/2" = 1' - 0"

CONFORMED SET

HDR ENGINEERING, INC.
99 HIGH STREET, SUITE 2300
BOSTON, MASSACHUSETTS 02110-2378
(617) 357-7700

REGISTERED ARCHITECT MICHAEL A. BASKIN No.4453 BOSTON MA COMMONWEALTH OF MASSACHUSETTS

Scale	AS NOTED			
Date	5/2/2022			
Job No.	10139379			
Designed by	BM / CS			
Drawn by	BM	0	CONFORMED SET	8/5/2022
Checked by	CS	No.	Description	Date
Approved by	MB	REVISIONS		

THE WORKS — CAMBRIDGE DEPARTMENT OF PUBLIC WORKS

Client	CITY OF CAMBRIDGE, MA	Sheet	A-521
Project	RIVER STREET INFRASTRUCTURE AND STREETSCAPE PROJECT	Total Sheets	381
Drawing	CUSTOM BENCH DETAILS	File No.	

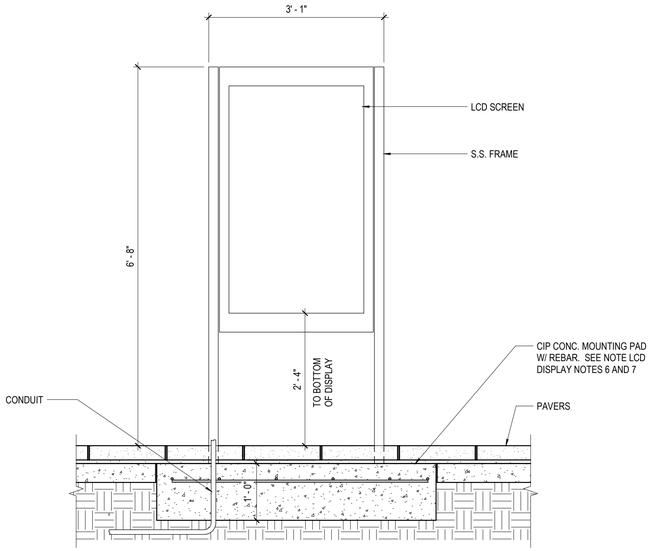

1 LCD DISPLAY ELEVATION
3/4" = 1'-0"

LCD DISPLAY NOTES:

1. REFER TO SPECIFICATIONS SECTION 16880 - DIGITAL SIGNS FOR LCD DISPLAY AND FRAME REQUIREMENTS.
2. LCD SCREEN, ENCLOSURE, FRAME AND AUDIO SPEAKERS TO BE DESIGNED BY LCD SCREEN MANUFACTURER.
3. MOUNTING BASE PLATE AND ANCHORS TO BE DESIGNED BY MANUFACTURER.
4. PROVIDE ACCESS PANEL ON INSIDE FACE OF BOTH LEGS OF FRAME TO ALLOW FOR BOLTING AND WIRE CONNECTIONS.
5. MOUNTING DETAILS SHALL ALLOW FOR CONDUIT INTO EITHER LEG OF THE FRAME.
6. CONCRETE MOUNTING PAD SHALL BE SET LEVEL WITH THE TOP OF THE ADJACENT CONCRETE BASE FOR THE FINISH PAVERS.
7. CONCRETE MOUNTING PAD REBAR SHALL BE #4 REBAR EACH WAY, SPACED AT 12" O.C., WITH A MINIMUM COVERAGE OF 3"
8. COORDINATE CONDUIT INSTALLATION WITH MOUNTING PAD, TO ENSURE CONDUIT WILL ALIGNWITH OPENING IN BASE PLATE.
9. COORDINATE CONDUIT STUB-UP HEIGHT WITH LOCATION OF ACCESS PANEL IN FRAME LEG.

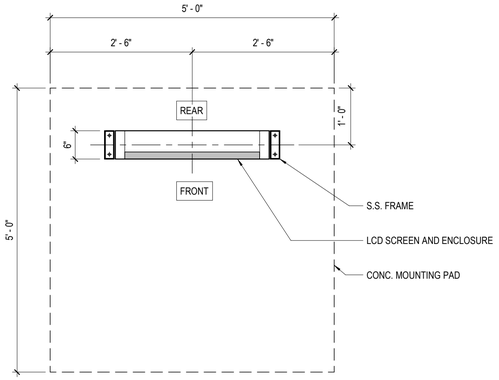

2 LCD DISPLAY PLAN
3/4" = 1'-0"

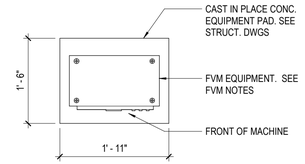

3 FVM CONCRETE EQUIPMENT PAD PLAN
3/4" = 1'-0"

FVM NOTES:

1. FVM EQUIPMENT SHALL BE AFC 2.0 LIMITED FUNCTION FARE VENDING MACHINE (LF FVM).
2. FVM EQUIPMENT SHALL BE PROVIDED AND INSTALLED BY THE MBTA AFC 2.0 GROUP.
3. CONTRACTOR SHALL COORDINATE SCHEDULE FOR INSTALLATION OF THE FVM EQUIPMENT WITH MBTA AFC 2.0 GROUP.
   A. IF THERE WILL BE A DELAY IN INSTALLATION OF THE FVM EQUIPMENT AFTER INSTALLATION OF THE MOUNTING PAD, THE CONTRACTOR SHALL PROVIDE A STAINLESS STEEL BOX TO COVER THE CONDUIT STUB-UP.
   B. THE STAINLESS STEEL BOX SHALL UTILIZE A BOLTING PATTERN MATCHING THE FVM EQUIPMENT TO ALLOW FOR BOLTS TO BE REUSED FOR THE FVM.
   C. THE STAINLESS STEEL BOX SHALL HAVE A MINIMUM HEIGHT OF 18".
4. REFER TO FVM FOUNDATION DETAIL ON SHEET S-5.09 FOR CONCRETE MOUNTING PAD DETAIL.
5. THE CONCRETE MOUNTING PAD SHALL BE SET FLUSH WITH THE ADJACENT PAVER SURFACES.
6. COORDINATE THE INSTALLATION OF THE CONDUIT WITH THE MOUNTING PAD AND CONCRETE BASE PAD SO THAT IT IS CAST INTO THE CONCRETE PAD.

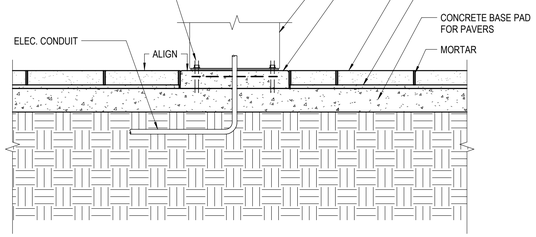

4 FVM CONCRETE EQUIPMENT PAD SECTION
3/4" = 1'-0"

0 1' - 0" 2' - 0" 3' - 0"
SCALE: 3/4" = 1' - 0"

ISSUED FOR BID

HDR ENGINEERING, INC.
99 HIGH STREET, SUITE 2300
BOSTON, MASSACHUSETTS 02110-2378
(617) 357-7700

REGISTERED ARCHITECT MICHAEL A. BOSTON No.4453 BOSTON MA COMMONWEALTH OF MASSACHUSETTS

Scale	AS NOTED			
Date	5/2/2022			
Job No.	10139379			
Designed by	BM / CS			
Drawn by	BM			
Checked by	CS	No.	Description	Date
Approved by	MB	REVISIONS		

THE WORKS — CAMBRIDGE DEPARTMENT OF PUBLIC

Client	CITY OF CAMBRIDGE, MA	Sheet	A-522
Project	RIVER STREET INFRASTRUCTURE AND STREETSCAPE PROJECT	Total Sheets	381
Drawing	LCD SCREEN AND FVM DETAILS	File No.	

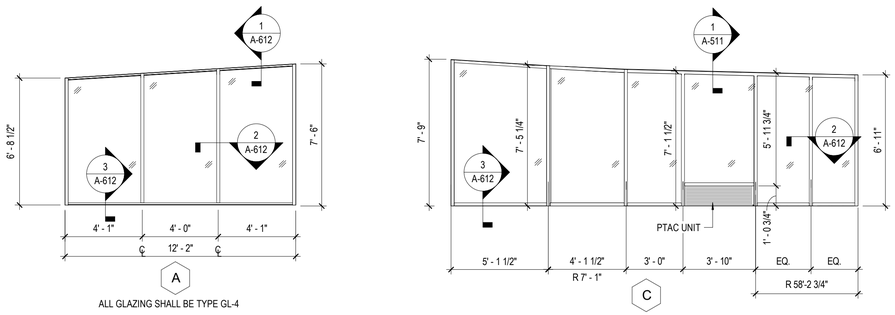

ALL GLAZING SHALL BE TYPE GL-4

GLAZING SHALL BE GL-4 UNLESS OTHERWISE NOTED

1 RIVER ST SHELTER BOOTH THERMAL STEEL WINDOW DIAGRAM

1/4" = 1'-0"

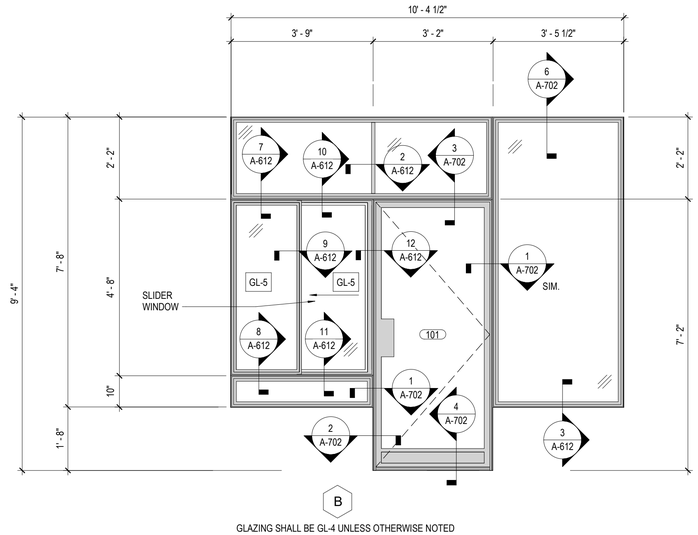

GLAZING SHALL BE GL-4 UNLESS OTHERWISE NOTED

2 RIVER ST SHELTER BOOTH THERMAL STEEL WINDOW & DOOR DIAGRAM 'B'

1/2" = 1'-0"

3 RIVER ST SHELTER WINDSCREEN DIAGRAM

1/4" = 1'-0"

ALL GLAZING PANELS SHALL BE TYPE GL-3

GLAZING NOTES:

1. CENTER OF WINDOW FRAMES SHALL ALIGN WITH CENTER OF WALL AND CENTER OF BOTTOM OF PERIMTER BEAM.
2. TOP OF WINDOWS WILL FOLLOW PITCH AND CURVATURE OF PERIMETER BEAM. VERIFY ALL DIMENSIONS WITH ACTUAL AS-BUILT CONDITIONS PRIOR TO FABRICATION OF GLAZING PANELS AND FRAMES.
3. WHERE RADIUS IS PROVIDED, IT INDICATES THE RADIUS AT THE CENTER OF THE WALL.
4. ALL GLAZING SHALL BE FIXED GLAZING, UNLESS OTHERWISE NOTED.
5. SEE SPECIFCATIONS SECTION 08801 FOR GLAZING TYPES.
6. SEE SPECIFICATIONS SECTION 08510 FOR WINDOW FRAMES.

0 2' 4' 8'

SCALE: 1/4" = 1' - 0"

ISSUED FOR BID

HDR ENGINEERING, INC.
99 HIGH STREET, SUITE 2300
BOSTON, MASSACHUSETTS 02110-2378
(617) 357-7700

REGISTERED ARCHITECT SAMUEL A. GLICK No.4453 BOSTON MA COMMONWEALTH OF MASSACHUSETTS

Scale	AS NOTED
Date	5/2/2022
Job No.	10139379
Designed by	BM / CS
Drawn by	BM
Checked by	CS
Approved by	MB

No.	Description	Date
	REVISIONS	

THE WORKS — CAMBRIDGE DEPARTMENT OF PUBLIC

Client	CITY OF CAMBRIDGE, MA	Sheet A-601
Project	RIVER STREET INFRASTRUCTURE AND STREETSCAPE PROJECT	Total Sheets 381
Drawing	STOREFRONT AND WINDSCREEN DIAGRAMS	File No.

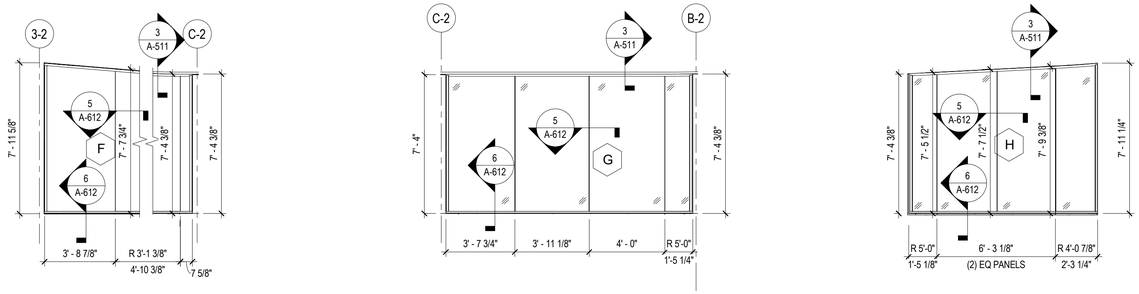

1 MAGAZINE ST SHELTER WINDSCREEN DIAGRAM

1/4" = 1'-0"

ALL GLAZING PANELS SHALL BE GL-3 (UON)

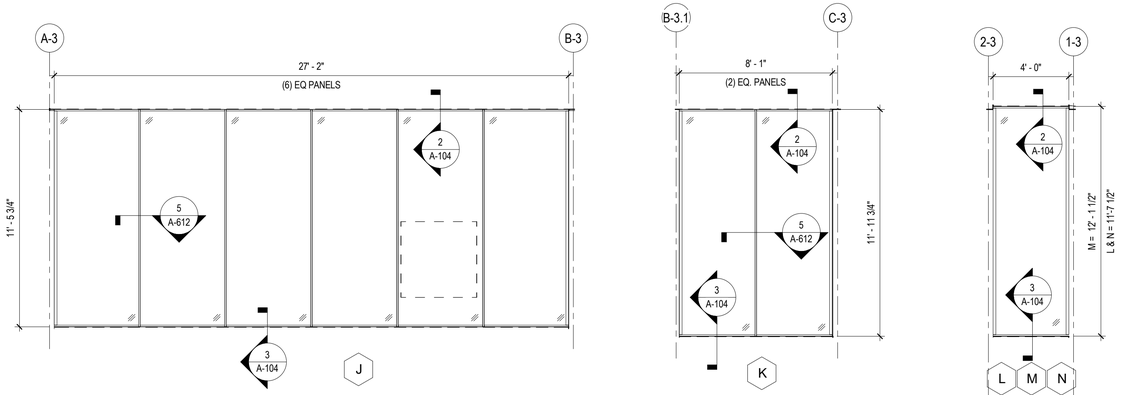

2 GREEN ST SHELTER WINDSCREEN DIAGRAMS

1/4" = 1'-0"

ALL GLAZING PANELS SHALL BE GL-3 (UON)

0 2' 4' 8'

SCALE: 1/4" = 1' - 0"

CONFORMED SET

HDR ENGINEERING, INC.
99 HIGH STREET, SUITE 2300
BOSTON, MASSACHUSETTS 02110-2378
(617) 357-7700

REGISTERED ARCHITECT
MICHAEL A. BASKIN
No.4453
BOSTON
MA
COMMONWEALTH OF MASSACHUSETTS

Scale	AS NOTED			
Date	5/2/2022			
Job No.	10139379			
Designed by	BM / CS			
Drawn by	BM	0	CONFORMED SET	8/5/2022
Checked by	CS	No.	Description	Date
Approved by	MB	REVISIONS		

THE WORKS — CAMBRIDGE DEPARTMENT OF PUBLIC WORKS

Client	CITY OF CAMBRIDGE, MA	Sheet A-602
Project	RIVER STREET INFRASTRUCTURE AND STREETSCAPE PROJECT	Total Sheets 381
Drawing	WINDSCREEN DIAGRAMS	File No.

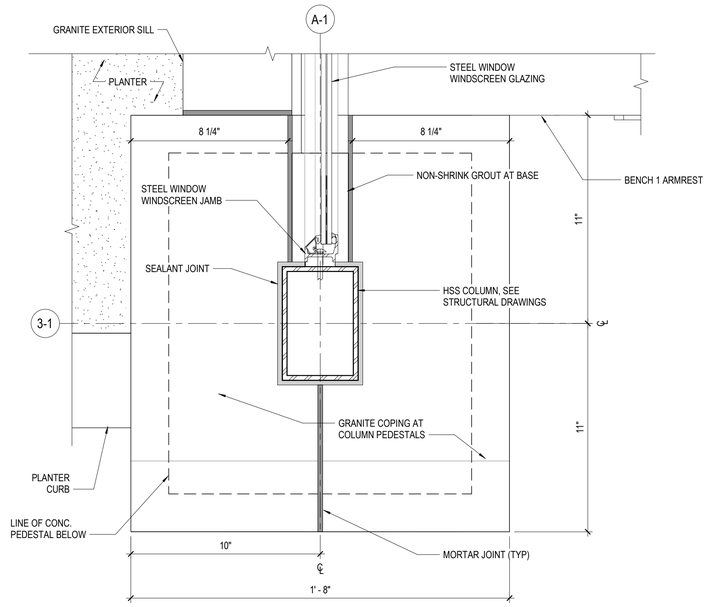

1 COLUMN DETAIL - RIVER ST SHELTER
3" = 1'-0"

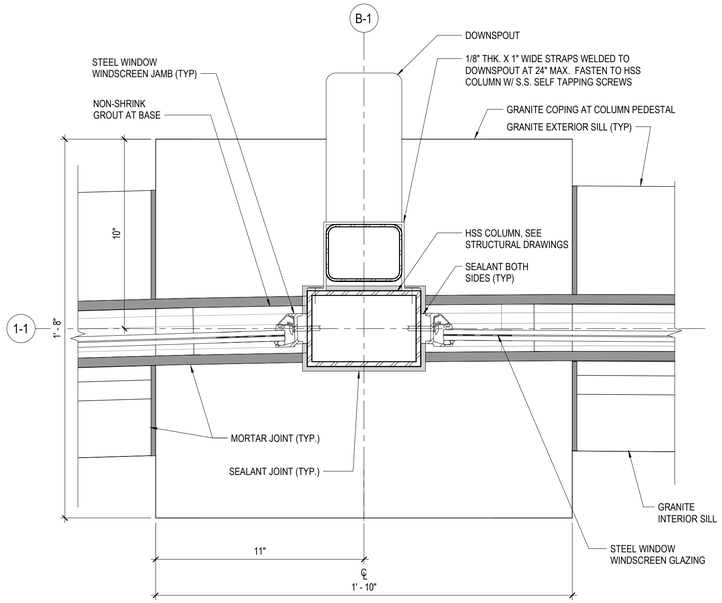

2 COLUMN DETAIL - RIVER ST SHELTER
3" = 1'-0"

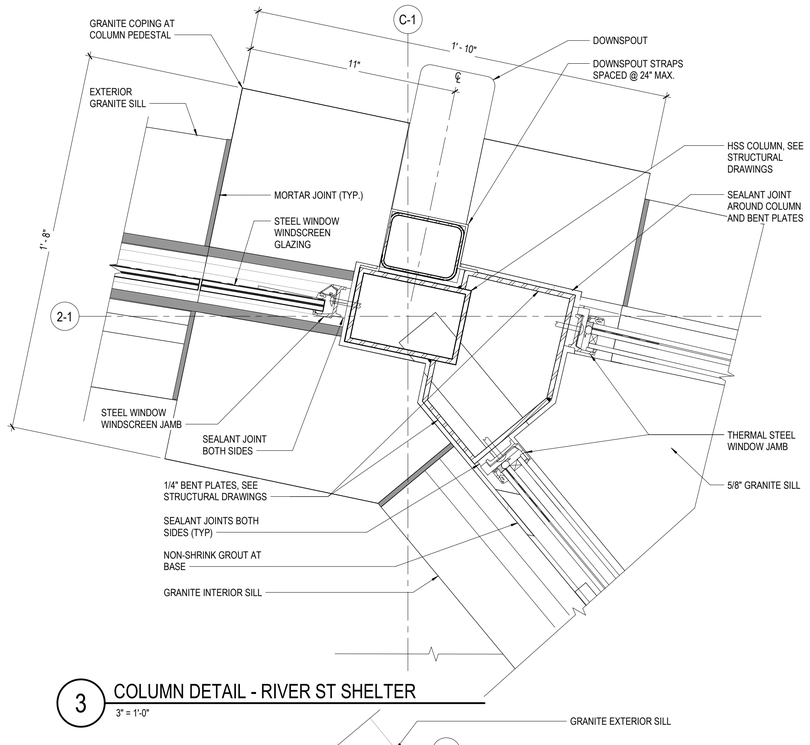

3 COLUMN DETAIL - RIVER ST SHELTER
3" = 1'-0"

4 COLUMN DETAIL - MAGAZINE ST SHELTER
3" = 1'-0"

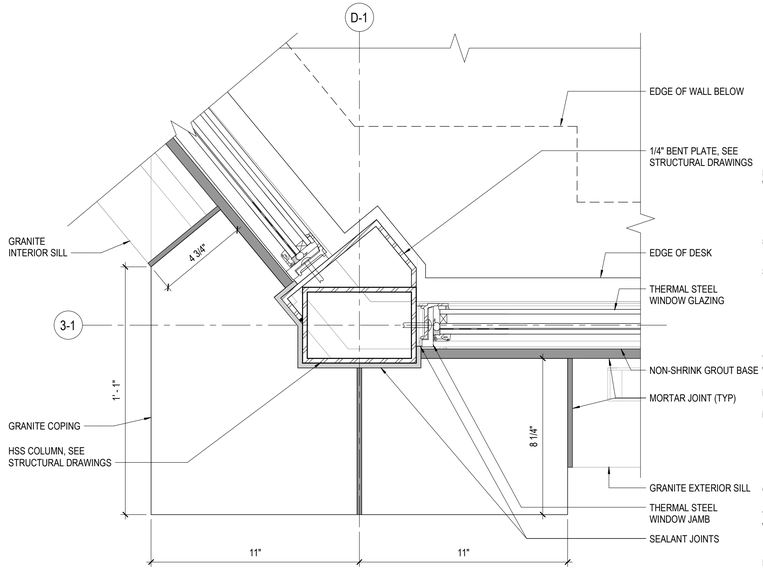

5 COLUMN DETAIL - RIVER ST SHELTER
3" = 1'-0"

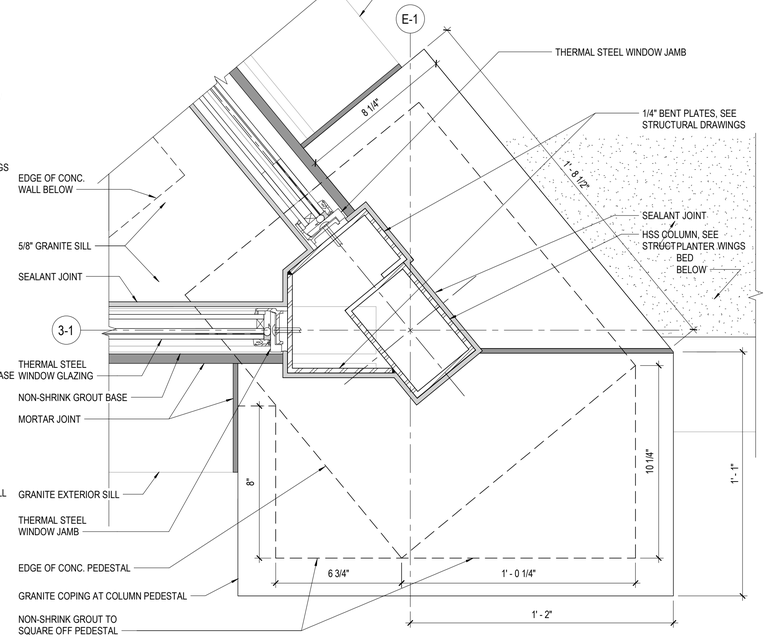

6 COLUMN DETAIL - RIVER ST SHELTER
3" = 1'-0"

0 3" 6" 9" 1' - 0"
SCALE: 3" = 1' - 0"

ISSUED FOR BID

HDR ENGINEERING, INC.
99 HIGH STREET, SUITE 2300
BOSTON, MASSACHUSETTS 02110-2378
(617) 357-7700

REGISTERED ARCHITECT
MICHAEL A. BROWN
No. 4453
BOSTON
MA
COMMONWEALTH OF MASSACHUSETTS

Scale	AS NOTED
Date	5/2/2022
Job No.	10139379
Designed by	BM / CS
Drawn by	BM
Checked by	CS
Approved by	MB

No.	Description	Date
	REVISIONS	

THE CAMBRIDGE DEPARTMENT OF PUBLIC WORKS

Client: CITY OF CAMBRIDGE, MA

Project: RIVER STREET
INFRASTRUCTURE AND STREETSCAPE PROJECT

Drawing: STOREFRONT AND WINDSCREEN DETAILS

Sheet: A-611
Total Sheets: 381
File No.

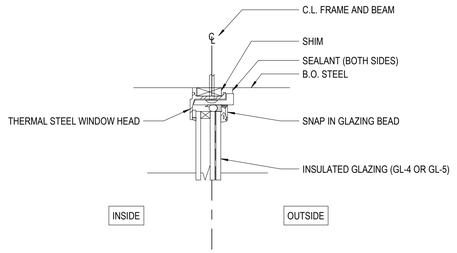

1 HEAD DETAIL - THERMAL STEEL WINDOWS

3" = 1'-0"

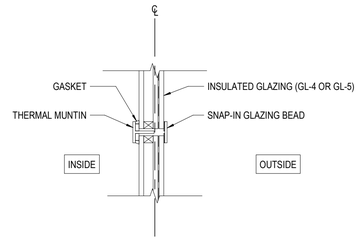

2 TRUE DIVIDED MUNTIN DETAIL - THEMAL STEEL WINDOWS

3" = 1'-0"

VERTICAL AND HORIZONTAL MUNTINS ARE SIMILAR

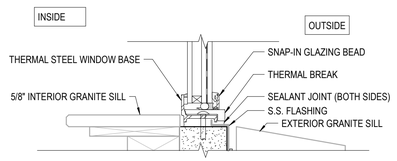

3 BASE DETAIL - THERMAL STEEL WINDOWS

3" = 1'-0"

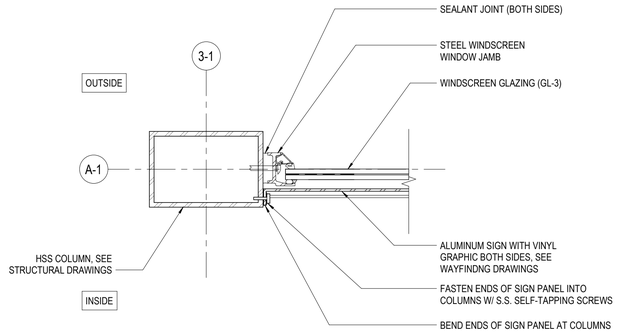

4 BUS STATION SIGN VERTICAL ATTACHMENT DETAIL

3" = 1'-0"

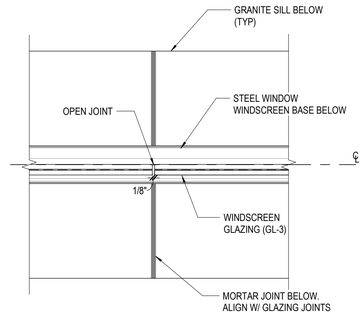

5 WINDSCREEN JOINT DETAIL

3" = 1'-0"

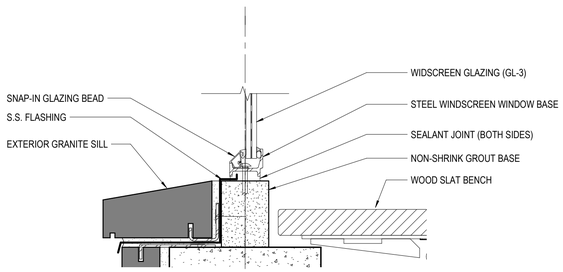

6 WINDSCREEN DETAIL AT SILL

3" = 1'-0"

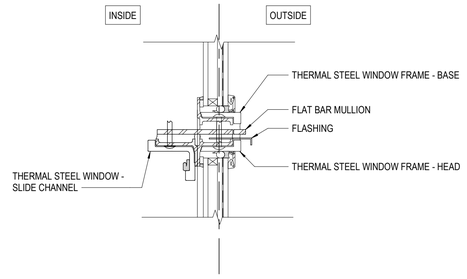

7 SLIDER WINDOW - HEAD DETAIL AT TRANSITION

3" = 1'-0"

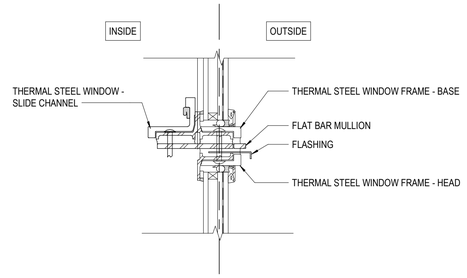

8 SLIDER WINDOW - BASE DETAIL AT TRANSITION

3" = 1'-0"

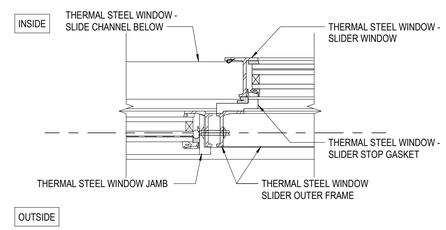

9 SLIDER WINDOW - TRANSITION DETAIL

3" = 1'-0"

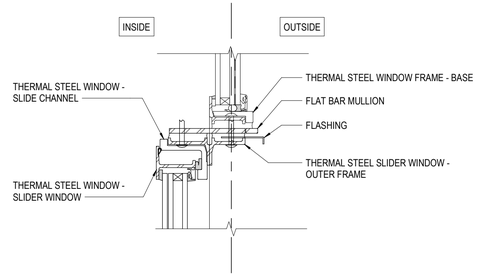

10 SLIDER WINDOW - HEAD DETAIL

3" = 1'-0"

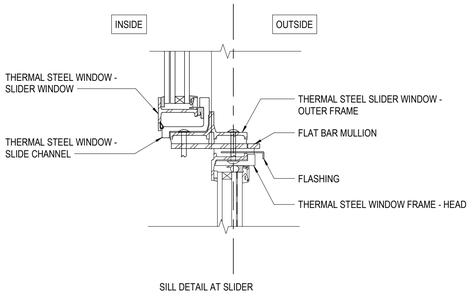

11 SLIDER WINDOW - BASE DETAIL

3" = 1'-0"

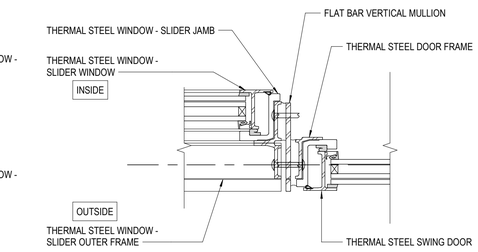

12 SLIDER WINDOW - JAMB DETAIL

3" = 1'-0"

0 3" 6" 9" 1'- 0"

SCALE: 3" = 1' - 0"

ISSUED FOR BID

HDR ENGINEERING, INC.
99 HIGH STREET, SUITE 2300
BOSTON, MASSACHUSETTS 02110-2378
(617) 357-7700

REGISTERED ARCHITECT
MICHAEL A. BROWN
No.4453
BOSTON
MA
COMMONWEALTH OF MASSACHUSETTS

Scale	AS NOTED
Date	5/2/2022
Job No.	10139379
Designed by	BM / CS
Drawn by	BM
Checked by	CS
Approved by	MB

No.	Description	Date
	REVISIONS	

THE WORKS — CAMBRIDGE DEPARTMENT OF PUBLIC

Client	CITY OF CAMBRIDGE, MA
Project	RIVER STREET INFRASTRUCTURE AND STREETSCAPE PROJECT
Drawing	WINDSCREEN DETAILS
Sheet	A-612
Total Sheets	381
File No.	

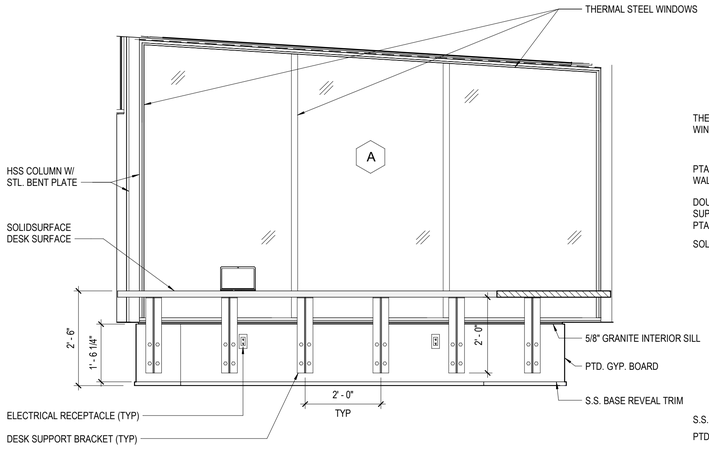

1 RIVER ST BOOTH INTERIOR ELEVATION - EAST

1/2" = 1'-0"

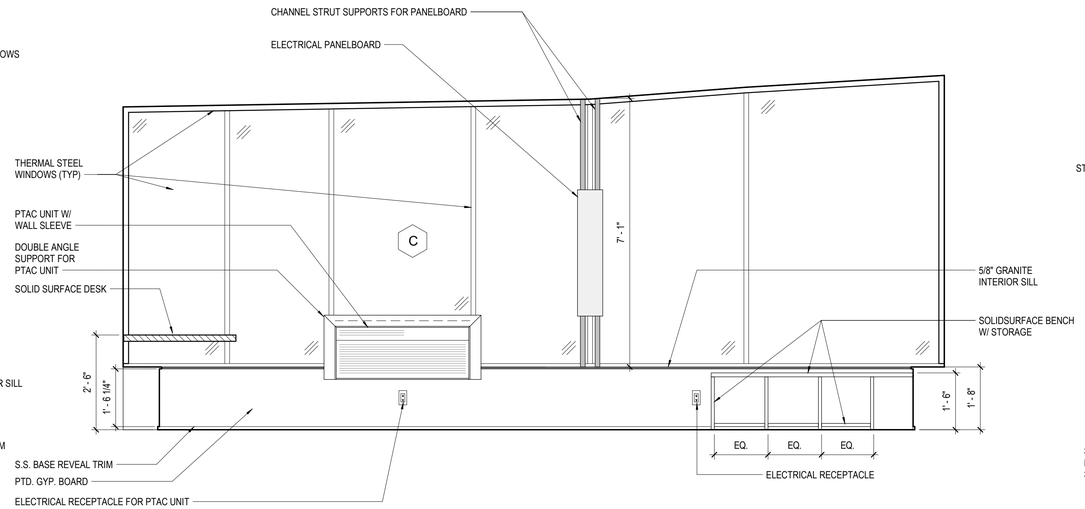

2 RIVER ST BOOTH INTERIOR ELEVATION - SOUTH / WEST

1/2" = 1'-0"

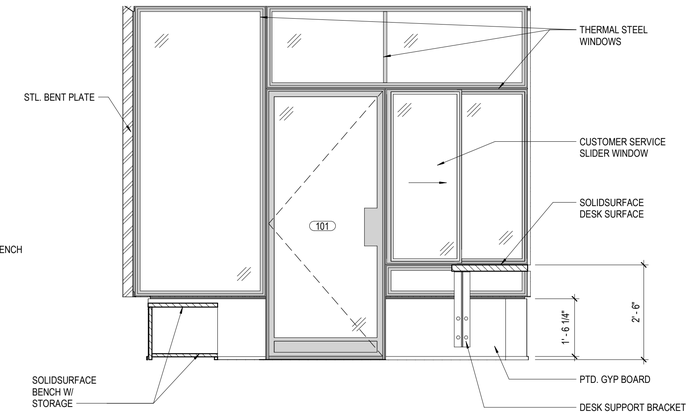

3 RIVER ST BOOTH INTERIOR ELEVATION - NORTH

1/2" = 1'-0"

0 2' 4' 8'

SCALE: 1/4" = 1' - 0"

ISSUED FOR BID

HDR ENGINEERING, INC.
99 HIGH STREET, SUITE 2300
BOSTON, MASSACHUSETTS 02110-2378
(617) 357-7700

REGISTERED ARCHITECT
MICHAEL A. BASKIN
No. 4457
BOSTON
MA
COMMONWEALTH OF MASSACHUSETTS

Scale	AS NOTED
Date	5/2/2022
Job No.	10139379
Designed by	BM / CS
Drawn by	BM
Checked by	CS
Approved by	MB

No.	Description	Date
	REVISIONS	

THE WORKS — CAMBRIDGE DEPARTMENT OF PUBLIC WORKS

Client: CITY OF CAMBRIDGE, MA

Project: RIVER STREET
INFRASTRUCTURE AND STREETSCAPE PROJECT

Drawing: RIVER ST BOOTH INTERIOR ELEVATIONS

Sheet: A-701

Total Sheets: 381

File No.

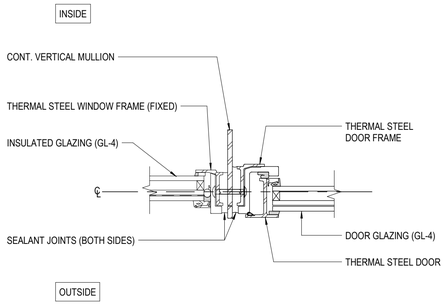

1 JAMB DETAIL (ABOVE KNEE WALL) - PLAN

3" = 1'-0"

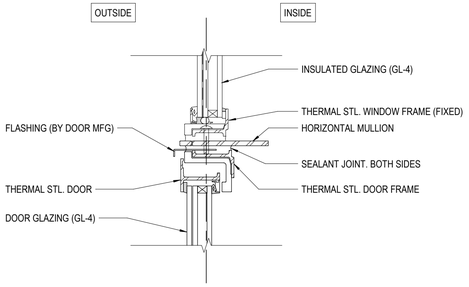

3 DOOR HEAD DETAIL AT TRANSOM

3" = 1'-0"

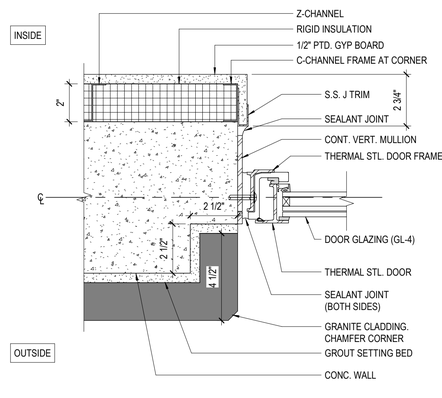

2 JAMB DETAIL AT KNEE WALL - PLAN

3" = 1'-0"

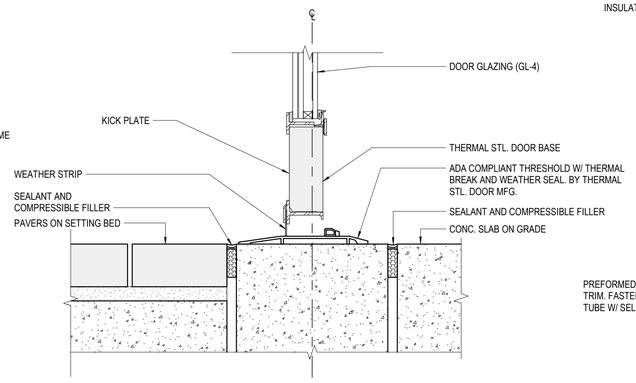

4 DOOR SILL DETAIL

3" = 1'-0"

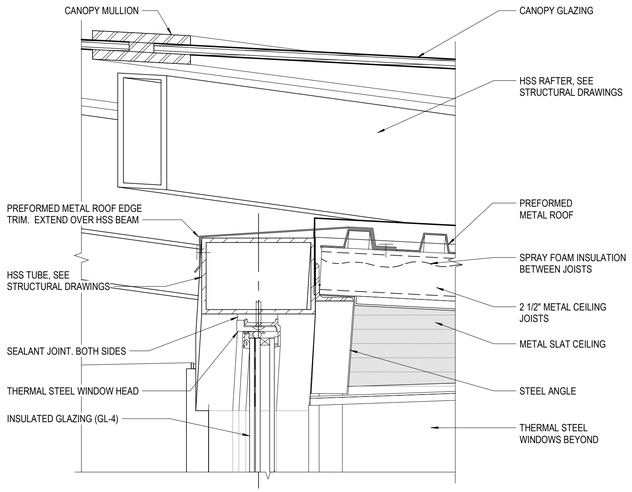

5 STOREFRONT HEAD DETAIL AT CEILING

3" = 1'-0"

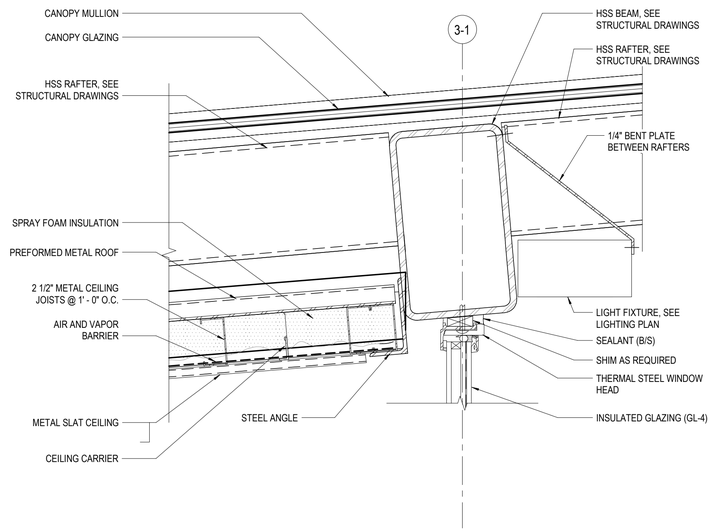

6 STOREFRONT HEAD DETAIL AT CEILING

3" = 1'-0"

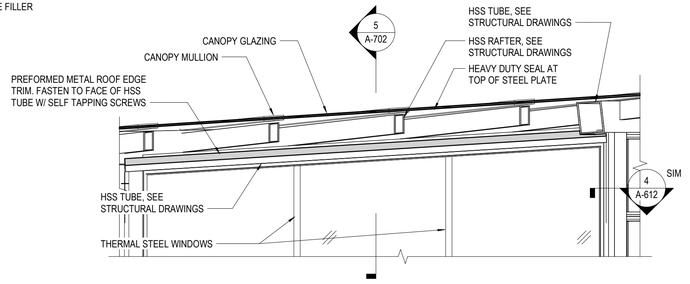

7 CANOPY SECTION AT BOOTH

1/2" = 1'-0"

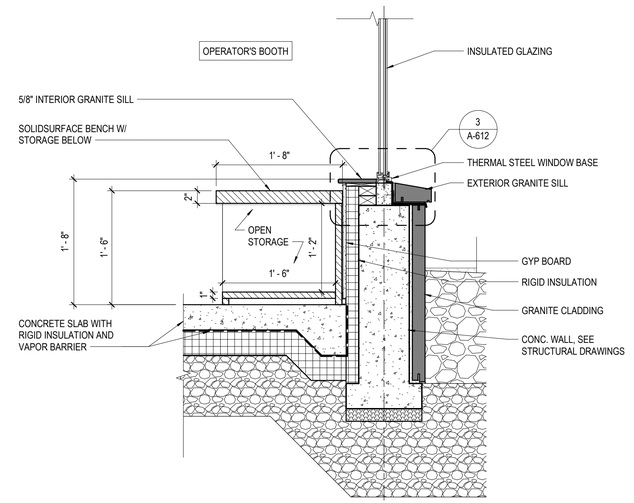

8 BENCH SECTION AT BOOTH

1" = 1'-0"

DOOR NOTES:

1. REFER TO SPECIFICATIONS SECTION 08510 FOR THERMAL STEEL DOOR.
2. THERMAL STEEL DOOR SHALL BE FROM THE SAME MANUFACTURER AS THE THERMAL STEEL WINDOWS.
3. THERMAL STEEL DOOR FIRE RATING: N/A
4. REFER TO GLAZING ELEVATIONS B ON SHEET A-601 FOR DOOR DIMENSIONS.

0 1' 2' 4'
SCALE: 1/2" = 1' - 0"

0 6" 1' 2'
SCALE: 1" = 1' - 0"

0 3" 6" 9" 1' - 0"
SCALE: 3" = 1' - 0"

ISSUED FOR BID

HDR ENGINEERING, INC.
99 HIGH STREET, SUITE 2300
BOSTON, MASSACHUSETTS 02110-2378
(617) 357-7700

REGISTERED ARCHITECT MICHAEL A. BASKIN No.4453 BOSTON MA COMMONWEALTH OF MASSACHUSETTS

Scale	AS NOTED			
Date	5/2/2022			
Job No.	10139379			
Designed by	BM / CS			
Drawn by	BM			
Checked by	CS	No.	Description	Date
Approved by	MB		REVISIONS	

THE WORKS — CAMBRIDGE DEPARTMENT OF PUBLIC

Client	CITY OF CAMBRIDGE, MA	Sheet	A-702
Project	RIVER STREET INFRASTRUCTURE AND STREETSCAPE PROJECT	Total Sheets	381
Drawing	BOOTH DETAILS	File No.	

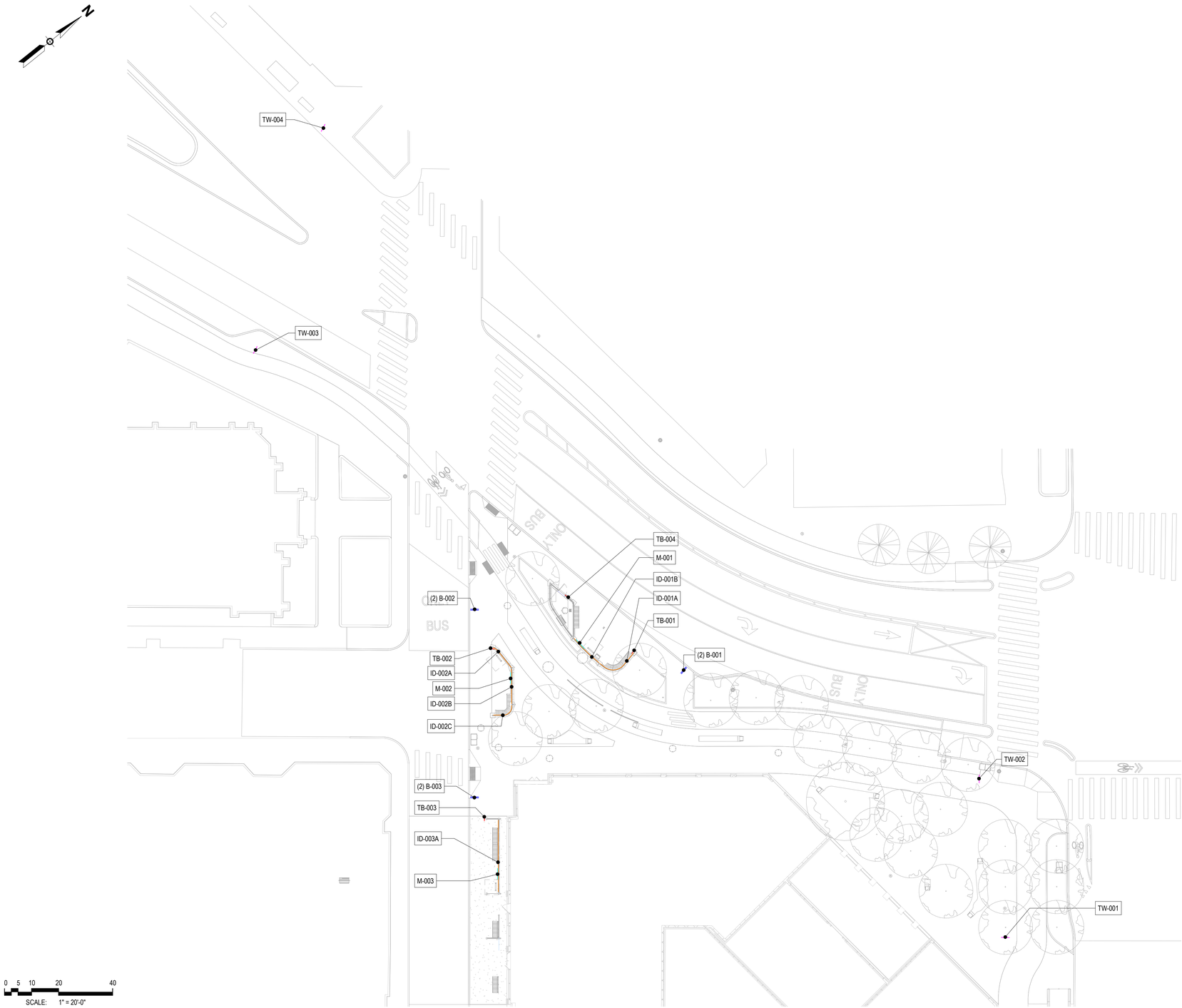

TRANSIT SIGNAGE NOTES:

1. REFER TO SHELTER PLANS AND ELEVATIONS FOR EXACT LOCATIONS OF SIGNS MOUNTED TO THE SHELTERS.
2. THE EXACT LOCATIONS OF WAYFINDING SIGNS TYPE "TW" SHALL BE COORDINATED WITH THE ENGINEER IN THE FIELD.
3. REFER TO SIGNAGE GRAPHICS NOTES ON SHEET A-802.

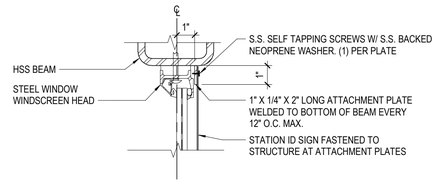

NOTE: SEE DETAIL 4 ON SHEET A-612 FOR STATION ID MOUNTING AT COLUMNS

2 STATION ID MOUNTING DETAIL

3" = 1'-0"

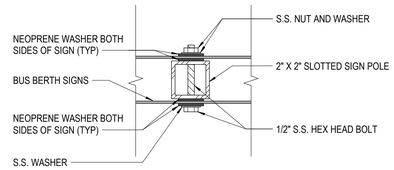

3 BUS BERTH SIGN MOUNTING DETAIL

3" = 1'-0"

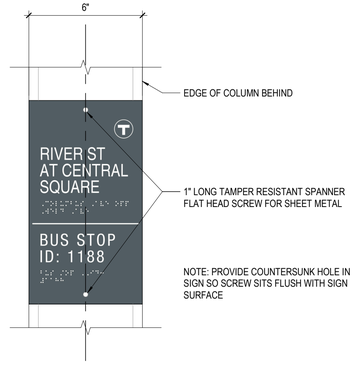

4 TACTILE BRAILLE SIGN MOUNTING DETAIL

3" = 1'-0"

CONFORMED SET

HDR ENGINEERING, INC.
99 HIGH STREET, SUITE 2300
BOSTON, MASSACHUSETTS 02110-2378
(617) 357-7700

REGISTERED ARCHITECT MICHAEL A. BOSTON No.4453 BOSTON MA COMMONWEALTH OF MASSACHUSETTS

Scale	AS NOTED			
Date	5/2/2022			
Job No.	10139379			
Designed by	BM / CS			
Drawn by	BM	0	CONFORMED SET	8/5/2022
Checked by	CS	No.	Description	Date
Approved by	MB	REVISIONS		

THE WORKS — CAMBRIDGE DEPARTMENT OF PUBLIC WORKS

Client	CITY OF CAMBRIDGE, MA	Sheet	A-801
Project	RIVER STREET INFRASTRUCTURE AND STREETSCAPE PROJECT	Total Sheets	381
Drawing	SIGNAGE PLAN	File No.	

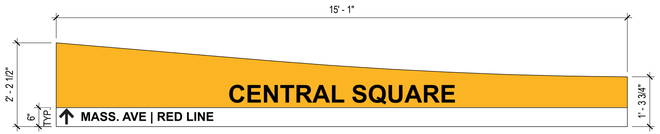

ID-001A - FRONT

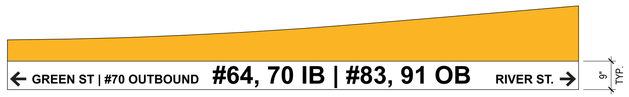

ID-001A - REAR

ID-001B - FRONT

ID-001B - REAR

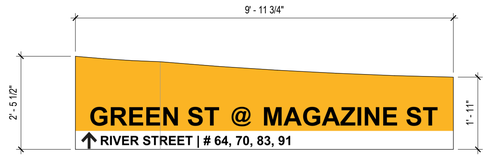

ID-002A - FRONT

ID-002A - REAR

ID-002B - FRONT

ID-002B - REAR

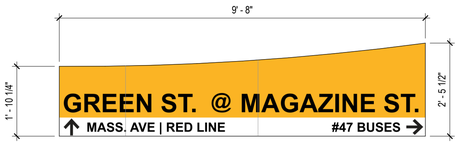

ID-002C - FRONT

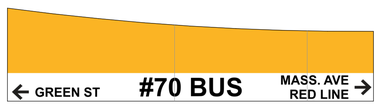

ID-002C - REAR

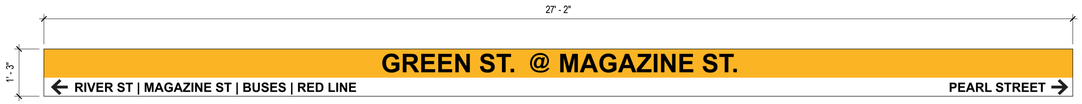

ID-003A - FRONT

1 SIGNAGE ELEVATIONS - SHELTER STATION ID SIGNS

NOT TO SCALE

ALUMINUM BASE WITH VINYL APPLIED GRAPHICS

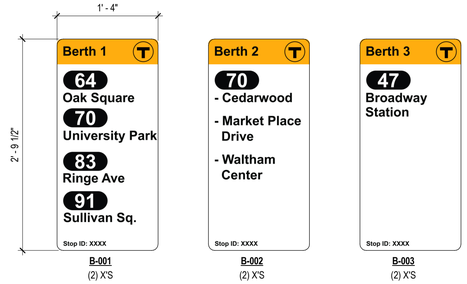

B-001 (2) X'S | B-002 (2) X'S | B-003 (2) X'S

2 SIGNAGE ELEVATIONS - BERTH SIGNS

NOT TO SCALE

ALUMINUM BASE WITH VINYL APPLIED GRAPHICS

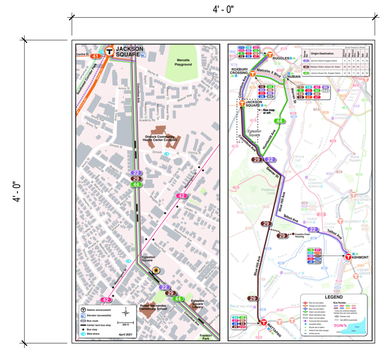

M-001 (3) X'S. EACH MAP PANEL WILL HAVE UNIQUE GRAPHICS

3 SIGNAGE ELEVATIONS - MAP PANEL

NOT TO SCALE

VINYL SIGNS ADHERED TO INSIDE FACE OF SHELTER STEEL WINDOW WINDSCREEN

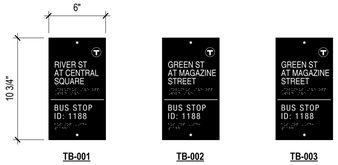

TB-001 | TB-002 | TB-003

4 SIGNAGE ELEVATIONS - TACTILE BRAILLE SIGNS

NOT TO SCALE

ZINC PLATE WITH CHEMICAL ETCH RAISED CHARACTERS

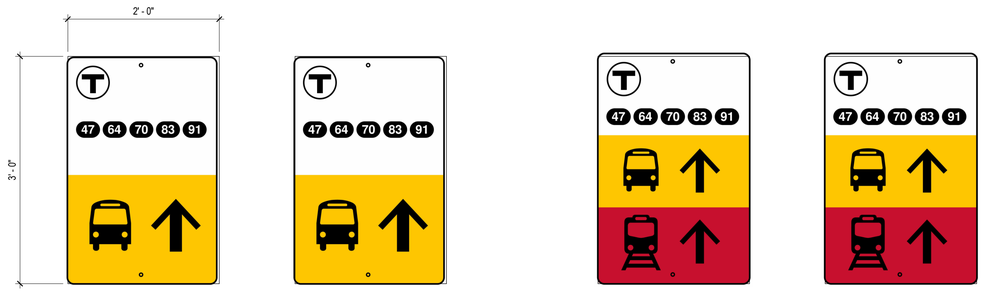

TW-001 | TW-002 | TW-003 | TW-004

5 SIGNAGE ELEVATIONS - TRANSIT WAYFINDING SIGNS

NOT TO SCALE

ALUMINUM BASE WITH APPLIED VINYL GRAPHICS

SIGNAGE GRAPHICS NOTES:

1. ALL SIGNAGE ARTWORK FOR SIGNS SHOWN ON THIS SHEET FOR USE IN SUBMITTALS AND FABRICATION TO BE PROVIDED BY THE MBTA AS ELECTRONIC IMAGE FILES. THE CONTRACTOR SHALL NOT ALTER OR RECREATE ANY SIGNAGE ARTWORK.
2. FOR ALL SIGNS OTHER THAN TACTILE BRAILLE SIGNS, REFER TO SPECIFICAITONS SECTION 10400 - FIXED SIGNAGE.
3. FOR TACTILE BRAILLE SIGNS, REFER TO SPECIFICAITONS SECTION 0426 - TACTILE BRAILLE SIGNAGE.

CONFORMED SET

HDR ENGINEERING, INC.
99 HIGH STREET, SUITE 2300
BOSTON, MASSACHUSETTS 02110-2378
(617) 357-7700

REGISTERED ARCHITECT MICHAEL A. BASKIN No.4453 BOSTON MA COMMONWEALTH OF MASSACHUSETTS

Scale	AS NOTED			
Date	5/2/2022			
Job No.	10139379			
Designed by	BM / CS			
Drawn by	BM	0	CONFORMED SET	8/5/2022
Checked by	CS	No.	Description	Date
Approved by	MB	REVISIONS		

CAMBRIDGE DEPARTMENT OF PUBLIC WORKS

Client	CITY OF CAMBRIDGE, MA	Sheet A-802
Project	RIVER STREET INFRASTRUCTURE AND STREETSCAPE PROJECT	Total Sheets 381
Drawing	SIGNAGE ELEVATIONS	File No.

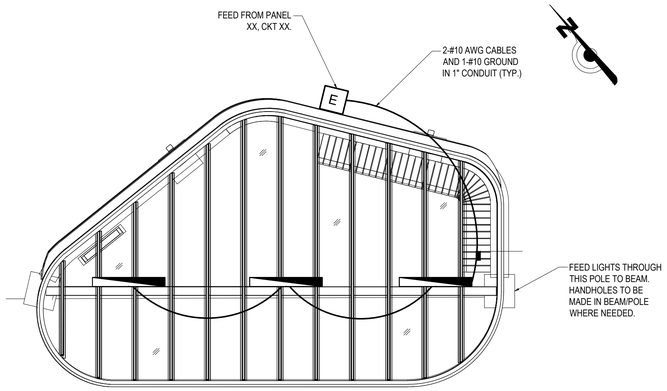

1 BUS SHELTER LIGHTING PLAN - GREEN ST
1/4" = 1'-0"

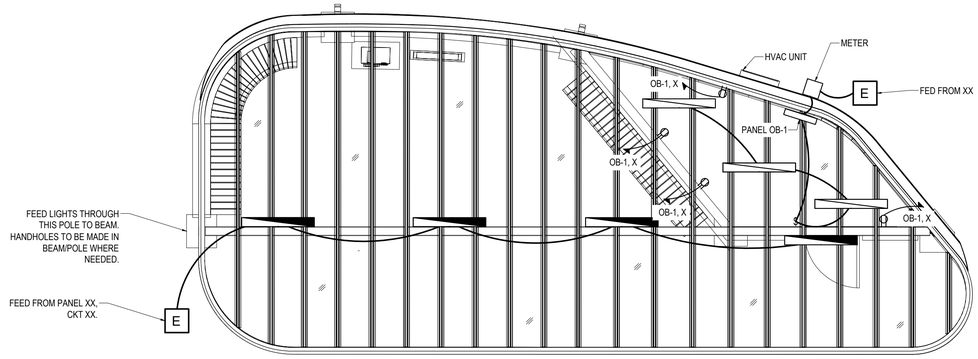

2 BUS SHELTER LIGHTING PLAN - RIVER ST
1/4" = 1'-0"

LEGEND

⚲	RECEPTACLE
$	LIGHT SWITCH
	LINEAR LIGHT FIXTURE TO BE MOUNTED TO CEILING
	LINEAR LIGHT FIXTURE TO BE MOUNTED TO THE SIDE OF THE BEAM
E	JUNCTION BOX

0 2' 4' 8'
SCALE: 1/4" = 1' - 0"

HDR ENGINEERING, INC.
99 HIGH STREET, SUITE 2300
BOSTON, MASSACHUSETTS 02110-2378
(617) 357-7700

COMMONWEALTH OF MASSACHUSETTS
PHILIP FUSCO
CIVIL
No. 45868
REGISTERED PROFESSIONAL ENGINEER

Scale			
Date			
Job No.			
Designed by			
Drawn by			
Checked by	No.	Description	Date
Approved by	REVISIONS		

THE WORKS — CAMBRIDGE DEPARTMENT OF PUBLIC WORKS

Client	CITY OF CAMBRIDGE, MA	Sheet E-101
Project	RIVER STREET INFRASTRUCTURE AND STREETSCAPE PROJECT	Total Sheets 192
Drawing	RIVER ST SHELTER - LIGHTING PLANS	File No.

File: C:\USERS\JPORTER\DESKTOP\RIVER ST\A-101.DWG Plotted: 11/5/2021 11:43:41 AM

STRUCTURAL GENERAL NOTES:

1.0 GENERAL CONDITIONS:

1.1) THE CONTRACTOR SHALL BE RESPONSIBLE FOR FIELD VERIFICATION OF ALL DIMENSIONS, ELEVATIONS, AND GENERAL CONDITIONS WITH REGARD TO EXISTING AND PROPOSED STRUCTURES AND UTILITIES.

1.2) THE STRUCTURAL DRAWINGS GOVERN THE WORK FOR STRUCTURAL FEATURES ONLY, UNLESS OTHERWISE NOTED. THE CONTRACTOR SHALL EXAMINE THE CONTRACT DOCUMENTS TO VERIFY AND COORDINATE DIMENSIONS AND LOCATIONS OF ITEMS OF ARCHITECTURAL AND CIVIL DISCIPLINES WHICH MAY NOT BE SHOWN ON STRUCTURAL DRAWINGS. ANY DISCREPANCIES SHALL BE BROUGHT TO THE ATTENTION OF THE ENGINEER PRIOR TO COMMENCING WORK. THE CONTRACTOR IS RESPONSIBLE FOR DETERMINING REQUIREMENTS FROM OTHER SERIES DRAWINGS, SUBCONTRACTORS AND SUPPLIERS AND COORDINATING THE LOCATIONS AND DETAILS FOR THESE ITEMS PRIOR TO FABRICATION OR ERECTION OF STRUCTURE. PENETRATIONS ARE SUBJECT TO APPROVAL BY THE ENGINEER.

1.3) DETAILS DESIGNATED AS "TYPICAL DETAILS", APPLY GENERALLY TO THE DRAWINGS IN AREAS WHERE CONDITIONS ARE SIMILAR TO THOSE DESCRIBED IN DETAILS.

1.4) DESIGN AND CONSTRUCTION OF ALL WORK SHALL CONFORM TO THE MOST CURRENT EDITIONS OF THE FOLLOWING:

- MASSACHUSETTS BUILDING CODE (CMR 780)
- INTERNATIONAL BUILDING CODE (IBC)
- ASCE/SEI 7 – MINIMUM DESIGN LOADS FOR BUILDINGS AND OTHER STRUCTURES
- ACI 117 – SPECIFICATIONS FOR TOLERANCES FOR CONCRETE CONSTRUCTION AND MATERIALS, ACI 301 – SPECIFICATIONS FOR STRUCTURE CONCRETE, AND ACI 318 – BUILDING CODE REQUIREMENTS FOR STRUCTURAL CONCRETE
- AISC STEEL CONSTRUCTION MANUAL
- AISC 303 CODE OF STANDARD PRACTICE FOR STEEL BUILDINGS AND BRIDGES
- 341 SPECIFICATIONS FOR STRUCTURAL STEEL BUILDING
- STRUCTURAL WELDING CODE AWS D1.1, UNLESS OTHERWISE NOTED

IN CASE OF CONFLICT BETWEEN CODES, STANDARD REGULATIONS, SPECIFICATIONS, GENERAL NOTES AND/OR MANUFACTURER'S REQUIREMENTS, THE MOST STRINGENT PROVISIONS SHALL GOVERN.

1.1) THE CONTRACTOR SHALL REPAIR, AT HIS OWN EXPENSE, ANY DAMAGE TO STRUCTURES APPURTENANCES DUE TO HIS CONSTRUCTION OPERATION.

1.6.) THE CONTRACTOR SHALL NOTIFY THE ENGINEER OF ANY DISCREPANCIES BETWEEN T THE EXISTING CONDITIONS AND THE CONTRACT DOCUMENTS. FAILURE TO NOTIFY THE ENGINEER WILL NOT RELIEVE THE CONTRACTOR OF HIS RESPONSIBILITY TO PERFORM THE WORK AS INTENDED BY THE CONTRACT DOCUMENTS. THE CONTRACTOR SHALL CORRECT ANY OR ALL WORK AS A RESULT FROM SUCH

FAILURE TO COORDINATE DISCREPANCIES TO THE SATISFACTION OF THE ENGINEER T NO ADDITIONAL COST.

1.7) ENGINEER'S REVIEW OF SHOP DRAWINGS IS FOR GENERAL CONFORMANCE WITH THE DESIGN CONCEPT AND DOES NOT RELIEVE THE CONTRACTOR FROM HIS RESPONSIBILITY TO COMPLY WITH THE REQUIREMENTS OF THE CONTRACT DOCUMENTS.

1.8) ELEVATIONS ARE IN REFERENCE TO NAVD 88 VERTICAL DATUM

2.0 DESIGN REQUIREMENTS:

2.1) DEAD LOADS:
THE DESIGN IS BASED UPON THE FOLLOWING UNIT WEIGHT OF THE MATERIALS:

REGULAR WEIGHT CONCRETE	150 PCF
STRUCTURAL STEEL	490 PCF

2.2) GROUND SNOW LOAD OF 40 PSF BASED ON REQUIREMENTS OF MASSACHUSETTS BUILDING CODE FOR CAMBRIDGE (CMR 780 TABLE 1604.11).

2.3) BASIC WIND SPEED OF 128 MPH BASED ON REQUIREMENTS OF MASSACHUSETTS BUILDING CODE FOR CAMBRIDGE FOR RISK CATEGORY II STRUCTURES (CMR 780 TABLE 1604.11).

2.4) SHELTER ROOFS ARE DESIGNED FOR A ROOF LIVE LOAD OF 20 PSF BASED ON REQUIREMENTS OF ASCE/SEI MINIMUM DESIGN LOADS FOR BUILDINGS AND OTHERS (ASCE/SEI 7 TABLE 4.3–1)

3.0 SITEWORK / FOUNDATION:

3.1) THE CONTRACTOR SHALL FIELD VERIFY ALL UTILITIES ABOVE GRADE, AT GRADE, AND BELOW GRADE INCLUDING PIPES AND STRUCTURES PRIOR TO START OF CONSTRUCTION. CONTRACTOR SHALL CONTACT DIG–SAFE AND NECESSARY CITY DEPARTMENTS AS PART OF FIELD LOCATION OF UTILITIES PRIOR TO START OF WORK. CONTRACTOR TO VACUUM EXCAVATION WITHIN 3 FEET OF EXISTING UTILITIES TO REMAIN.

3.2) AN ALLOWABLE BEARING PRESSURE OF 4 KSF IS USED FOR ALL SPREAD FOOTING FOUNDATION DESIGN. THE BEARING PRESSURE WAS DETERMINED USING HISTORICAL BORING LOGS AND THE MASSACHUSETTS STATE BUILDING CODE (CMR 780 TABLE 1806.2A).

3.3) THE ENGINEER SHALL INSPECT THE PROPOSED BOTTOM OF FOOTING ELEVATION AND WHERE UNSUITABLE MATERIALS ARE PRESENT SHALL DIRECT THE CONTRACTOR TO OVER EXCAVATE IN ORDER TO EXPOSE SUITABLE BEARING MATERIALS.

4.0 REINFORCED CONCRETE:

4.1) REINFORCED CONCRETE WORK SHALL BE PERFORMED IN ACCORDANCE WITH ACI 318, ACI 117 AND ACI 301.

4.2) MIXING, TRANSPORTING, PLACING AND TESTING OF CONCRETE SHALL BE IN ACCORDANCE WITH ACI 301.

4.3) PRIOR TO CONCRETE PLACEMENT, THE CONTRACTOR SHALL PREPARE A CONCRETE MIX DESIGN FOR EACH TYPE OF CONCRETE TO BE USED. MIX DESIGNS SHALL BE SUBMITTED FOR TESTING AND FOR THE ENGINEER'S APPROVAL IN ACCORDANCE WITH THE SPECIFICATIONS. NO CONCRETE SHALL BE PLACED UNTIL MIX DESIGN APPROVED.MIX DESIGNS SHALL BE APPROVED MASSDOT MIXES FROM THE QUALIFIED CONSTRUCTION MATERIALS LIST.

4.4) CAST–IN–PLACE CONCRETE SHALL BE A MINIMUM OF 4000 PSI COMPRESSIVE STRENGTH(fc') AT 28 DAYS, WITH $\frac{3}{4}$" AGGREGATE, UNLESS OTHERWISE NOTED.

4.5) ALL CONCRETE SHALL BE NORMAL WEIGHT CONCRETE (150 PCF), AIR–ENTRAINED, WITH CEMENT CONFORMING TO ASTM C150, TYPE II.

4.6) ALL REINFORCING STEEL TO BE ASTM A615 GRADE 60 EPOXY COATED IN ACCORDANCE WITH ASTM A775.

4.7) MINIMUM CLEAR CONCRETE PROTECTION FOR REINFORCING UNLESS OTHERWISE NOTED:

CONCRETE CAST AGAINST EARTH:	3"
ALL OTHERS	2"

4.8) REINFORCING BAR SPLICES (LAPS) SHALL BE CLASS "B" TENSION LAPS PER ACI 318 U.N.O (LATEST EDITION).

4.9) CONCRETE WORK SHALL BE COORDINATED WITH ALL UTILITIES, STRUCTURAL STEEL AND ELECTRICAL WORK. THE CONTRACTOR SHALL VERIFY INSTALLATION AND LOCATIONS OF ALL INSERTS, ANCHOR BOLTS, DOWELS, BLOCKOUTS AND SLEEVES PRIOR TO CONCRETE PLACEMENT.

4.10) CONSTRUCTION TOLERANCES SHALL BE IN ACCORDANCE WITH ACI 117.

4.11) EXPOSED STRUCTURAL STEEL SHALL BE PROTECTED FROM CONCRETE SPLATTER DURING ANY CONCRETE PLACEMENT. IF CONCRETE SPLATTER LANDS ON STRUCTURAL STEEL, IT SHOULD BE CLEARED FROM STEEL IMMEDIATELY.

4.12) ANCHOR BOLTS SHALL BE SET BY TEMPLATE AND CAST–IN–PLACE. ANCHOR BOLTS SHALL MEET ASTM F1554 GRADE 55. ANCHOR BOLTS SHALL BE HOT DIPPED GALVANIZED WITH ASTM A153.

5.0 STRUCTURAL STEEL

5.1) ALL STRUCTURAL STEEL SHALL BE ARCHITECTURAL EXPOSED STRUCTURAL STEEL (AESS) AS DEFINED BY AISC, STEEL CONSTRUCTION MANUAL. LATEST EDITION.

5.2) STRUCTURAL STEEL WORK SHALL CONFORM TO THE REQUIREMENTS OF THESE NOTES, SPECIFICATIONS, AISC SPECIFICATIONS, AND THE COMMONWEALTH OF MASSACHUSETTS STATE BUILDING CODE.

5.3) HSS TUBING SHALL MEET THE REQUIREMENTS OF ASTM A500 GRADE B. STEEL ANGLES AND PLATES SHALL MEET THE REQUIREMENTS OF ASTM A36.

5.4) AISC SPECIFICATIONS FOR "DESIGN, FABRICATION, AND ERECTION OF STRUCTURAL STEEL", 9TH EDITION SHALL APPLY, EXCEPT AS MODIFIED BY THE STRUCTURAL DRAWINGS AND SPECIFICATIONS.

5.5) THE ENDS OF ALL HSS SECTIONS SHALL BE CAPPED. PROVIDE 1" DIAMETER DRAIN AT END OF ALL SECTIONS FOR DRAINAGE.

5.6) ARCHITECTURALLY EXPOSED STRUCTURAL STEEL (AESS) SHALL BE PREPARED AND COATED IN ACCORDANCE WITH SPECIFICATIONS. STRUCTURAL STEEL SHALL BE PRIMED AND FINISHED AS SPECIFIED IN SPECIFICATIONS, THE COLOR OF THE FINISH COAT SHALL BE AS SPECIFIED BY THE CITY OF CAMBRIDGE.

5.7) WELDING ELECTRODES SHALL CONFORM TO E70XX ELECTRODES OR AS OTHERWISE REQUIRED BY THE SPECIFICATIONS. WHERE WELD LENGTH IS NOT SHOWN, IT SHALL BE CONTINUOUS FOR THE FULL LENGTH OF THE JOINT.

5.8) BOLT HOLES IN STEEL SHALL BE STANDARD SIZE, EXCEPT AS OTHERWISE NOTED.

5.9) BOLTS SHALL BE ASTM A325. THREADS SHALL BE EXCLUDED FROM THE SHEAR PLANE. BOLTS AND OTHER FASTENING HARDWARE SHALL BE GALVANIZED IN ACCORDANCE WITH ASTM A153 AND PAINTED TO MATCH THE COLOR OF THE STRUCTURE.

5.10) ALL WELDING SHALL BE IN ACCORDANCE WITH AWSD1.1 UNLESS OTHERWISE DIRECTED IN THE SPECIFICATIONS. ALL WELDERS SHALL BE LICENSED, CERTIFIED AND/OR QUALIFIED AS REQUIRED BY THE CODE AND SPECIFICATIONS.

5.11) LEVELING GROUT SHALL BE NON–SHRINK. ALL LEVELING GROUT THICKNESS SHALL BE AS SHOWN ON THE PLANS OR AS NEEDED, BUT NOT LESS THAN $\frac{1}{2}$", UNLESS OTHERWISE APPROVED BY THE ENGINEER.

5.12) ELECTRICAL CONDUIT HOLES IN STRUCTURAL STEEL HSS MEMBERS SHALL BE A MAXIMUM OF $1\frac{1}{2}$" DIAMETER. LOCATION OF HOLES TO BE COORDINATED WITH ELECTRICAL SHEETS.

5.13) FLARE BEVEL GROOVE WELDS WITHOUT INDICATION OF WELD SIZE, THE WELD SHALL FILL THE JOINT FLUSH TO THE TOP OF THE RADII.

6.0 RIBBON STRUCTURE

6.2) THE SUPERSTRUCTURE AND CONNECTIONS TO FOUNDATIONS OF THE RIBBON STRUCTURE IS TO BE DESIGNED BY THE CONTRACTOR AS INDICATED IN SPECIFICATION SECTION 05700.

6.3) THE CONTRACTOR SHALL SUBMIT RIBBON DESIGN PLANS AND CALCULATIONS IN ACCORDANCE WITH THE SPECIFICATIONS.

ABBREVIATIONS

A.L.	ABOVE SLAB BEARING	FOUND.	FOUNDATION
℄	BASELINE	FTG.	FOOTING
BIT.	BITUMINOUS	GALV.	GALVANIZED
B.L.	BELOW SLAB BEARING	HORIZ.	HORIZONTAL
BRG.	BEARING	JT.	JOINT
C.I.P.	CAST IN PLACE	MAX.	MAXIMUM
℄	CENTERLINE	MIN.	MINIMUM
CL.,	CLR.	N.T.S.	NOT TO SCALE
	CLEARANCE	O.C.	ON CENTER
CONC.	CONCRETE	PC	PRE–CAST CONCRETE
CONSTR.	CONSTRUCTION	PROP.	PROPOSED
DIA.	DIAMETER	R&D	REMOVE AND DISPOSE
DWG.	DRAWING	R&R	REMOVE AND REPLACE
EA.	EACH	STA.	STATION
EL.,	ELEV.	TYP.	TYPICAL
	ELEVATION	T&B	TOP AND BOTTOM
E.F.	EACH FACE	UNO	UNLESS NOTED OTHERWISE
EXP.	EXPANSION	WP	WORK POINT

HDR ENGINEERING, INC.
99 HIGH STREET, SUITE 2300
BOSTON, MASSACHUSETTS 02110–2378
(617) 357–7700

COMMONWEALTH OF MASSACHUSETTS
MARIO LOCOCO
CIVIL ENGINEER
NO. 53117
REGISTERED
PROFESSIONAL ENGINEER
8/5/2022

Scale	AS SHOWN			
Date				
Job No.				
Designed by	BF			
Drawn by	BF	0	CONFORMED SET	8/5/2022
Checked by	ML	No.	Description	Date
Approved by	JW	REVISIONS		

CONFORMED SET

Client: CITY OF CAMBRIDGE, MA
Project: RIVER STREET INFRASTRUCTURE AND STREETSCAPE PROJECT
Drawing: **STRUCTURAL GENERAL NOTES**
Sheet: S-1.00
Total Sheets: 381
File No.: CNS

File: C:\PWWORKING\EAST01\D1817057\S-100 - GENERAL NOTES.DWG Plotted: 8/15/2022 2:36:25 PM

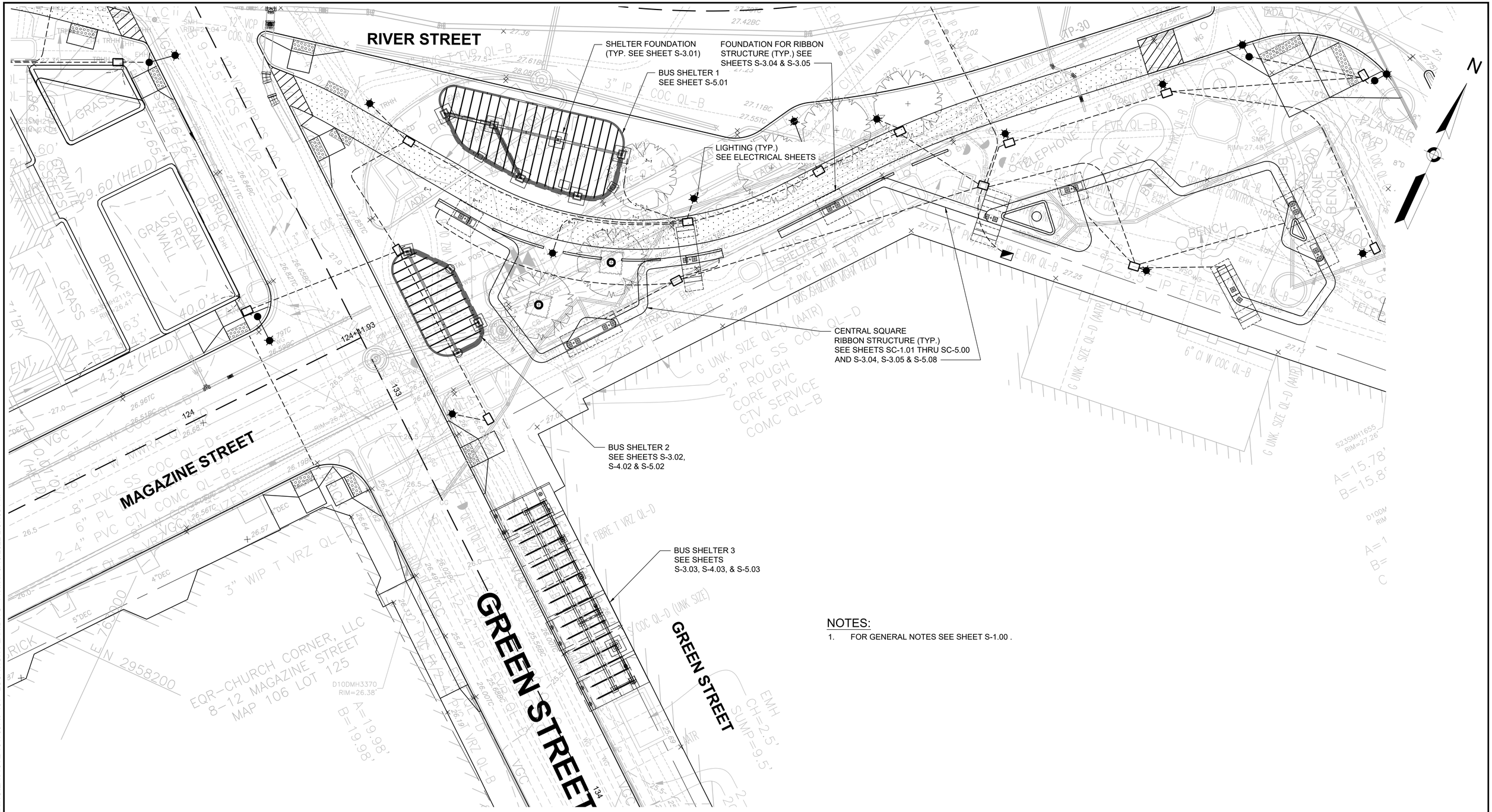

LOCATION PLAN
SCALE: 1" = 10'-0"

NOTES:

1. FOR GENERAL NOTES SEE SHEET S-1.00 .

0 10 20 30 40

SCALE: 1" = 10'

CONFORMED SET

HDR ENGINEERING, INC.
99 HIGH STREET, SUITE 2300
BOSTON, MASSACHUSETTS 02110-2378
(617) 357-7700

MARIO LOCOCO CIVIL ENGINEER NO. 52117 REGISTERED PROFESSIONAL ENGINEER
COMMONWEALTH OF MASSACHUSETTS
8/5/2022

Scale	AS SHOWN			
Date				
Job No.				
Designed by	BF			
Drawn by	BF	0	CONFORMED SET	8/5/2022
Checked by	ML	No.	Description	Date
Approved by	JW	REVISIONS		

THE WORKS — CAMBRIDGE DEPARTMENT OF PUBLIC WORKS

Client	CITY OF CAMBRIDGE, MA
Project	RIVER STREET INFRASTRUCTURE AND STREETSCAPE PROJECT
Drawing	**LOCATION PLAN**
Sheet	S-1.01
Total Sheets	381
File No.	CNS

File: C:\PW\WORKING\EAST01\D1817057\S-101 - LOCATION PLAN.DWG Plotted: 8/15/2022 2:37:09 PM

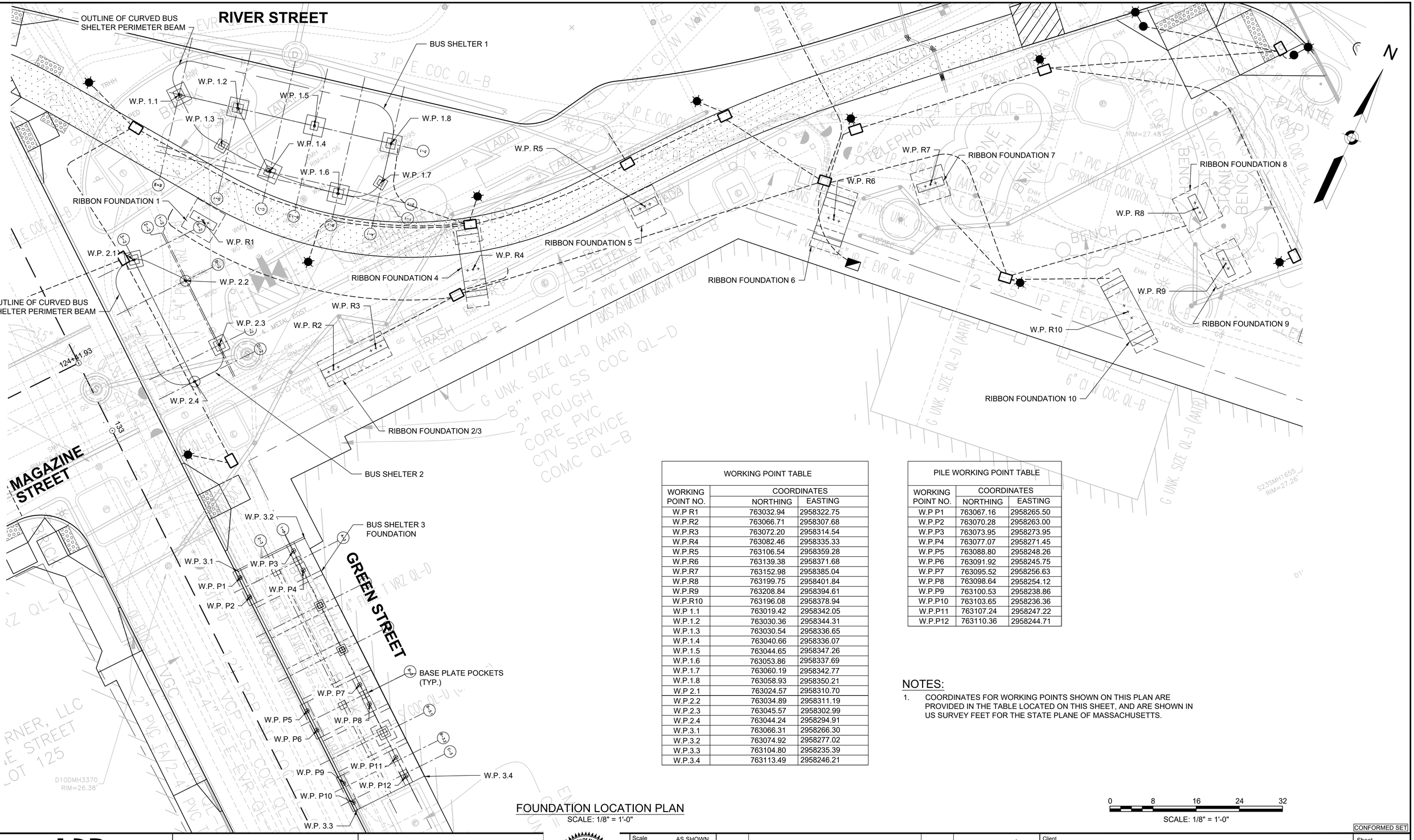

WORKING POINT TABLE		
WORKING POINT NO.	COORDINATES	
	NORTHING	EASTING
W.P R1	763032.94	2958322.75
W.P.R2	763066.71	2958307.68
W.P.R3	763072.20	2958314.54
W.P.R4	763082.46	2958335.33
W.P.R5	763106.54	2958359.28
W.P.R6	763139.38	2958371.68
W.P.R7	763152.98	2958385.04
W.P.R8	763199.75	2958401.84
W.P.R9	763208.84	2958394.61
W.P.R10	763196.08	2958378.94
W.P 1.1	763019.42	2958342.05
W.P.1.2	763030.36	2958344.31
W.P.1.3	763030.54	2958336.65
W.P.1.4	763040.66	2958336.07
W.P.1.5	763044.65	2958347.26
W.P.1.6	763053.86	2958337.69
W.P.1.7	763060.19	2958342.77
W.P.1.8	763058.93	2958350.21
W.P 2.1	763024.57	2958310.70
W.P.2.2	763034.89	2958311.19
W.P.2.3	763045.57	2958302.99
W.P.2.4	763044.24	2958294.91
W.P.3.1	763066.31	2958266.30
W.P.3.2	763074.92	2958277.02
W.P.3.3	763104.80	2958235.39
W.P.3.4	763113.49	2958246.21

PILE WORKING POINT TABLE		
WORKING POINT NO.	COORDINATES	
	NORTHING	EASTING
W.P P1	763067.16	2958265.50
W.P.P2	763070.28	2958263.00
W.P.P3	763073.95	2958273.95
W.P.P4	763077.07	2958271.45
W.P.P5	763088.80	2958248.26
W.P.P6	763091.92	2958245.75
W.P.P7	763095.52	2958256.63
W.P.P8	763098.64	2958254.12
W.P.P9	763100.53	2958238.86
W.P.P10	763103.65	2958236.36
W.P.P11	763107.24	2958247.22
W.P.P12	763110.36	2958244.71

NOTES:

1. COORDINATES FOR WORKING POINTS SHOWN ON THIS PLAN ARE PROVIDED IN THE TABLE LOCATED ON THIS SHEET, AND ARE SHOWN IN US SURVEY FEET FOR THE STATE PLANE OF MASSACHUSETTS.

FOUNDATION LOCATION PLAN

SCALE: 1/8" = 1'-0"

0 8 16 24 32

SCALE: 1/8" = 1'-0"

CONFORMED SET

HDR ENGINEERING, INC.
99 HIGH STREET, SUITE 2300
BOSTON, MASSACHUSETTS 02110-2378
(617) 357-7700

MARIO LOCICO CIVIL ENGINEER NO. 53117 REGISTERED PROFESSIONAL ENGINEER
COMMONWEALTH OF MASSACHUSETTS
8/5/2022

Scale	AS SHOWN			
Date				
Job No.				
Designed by	BF			
Drawn by	BF	0	CONFORMED SET	8/5/2022
Checked by	ML	No.	Description	Date
Approved by	JW	REVISIONS		

THE WORKS — CAMBRIDGE DEPARTMENT OF PUBLIC WORKS

Client	CITY OF CAMBRIDGE, MA
Project	RIVER STREET INFRASTRUCTURE AND STREETSCAPE PROJECT
Drawing	**FOUNDATION LOCATION PLAN**
Sheet	S-2.01
Total Sheets	381
File No.	CNS

File: C:\PW\WORKING\EAST01\D1817056\7113XXX-TB.DWG Plotted: 3/17/2022 10:22:03 AM

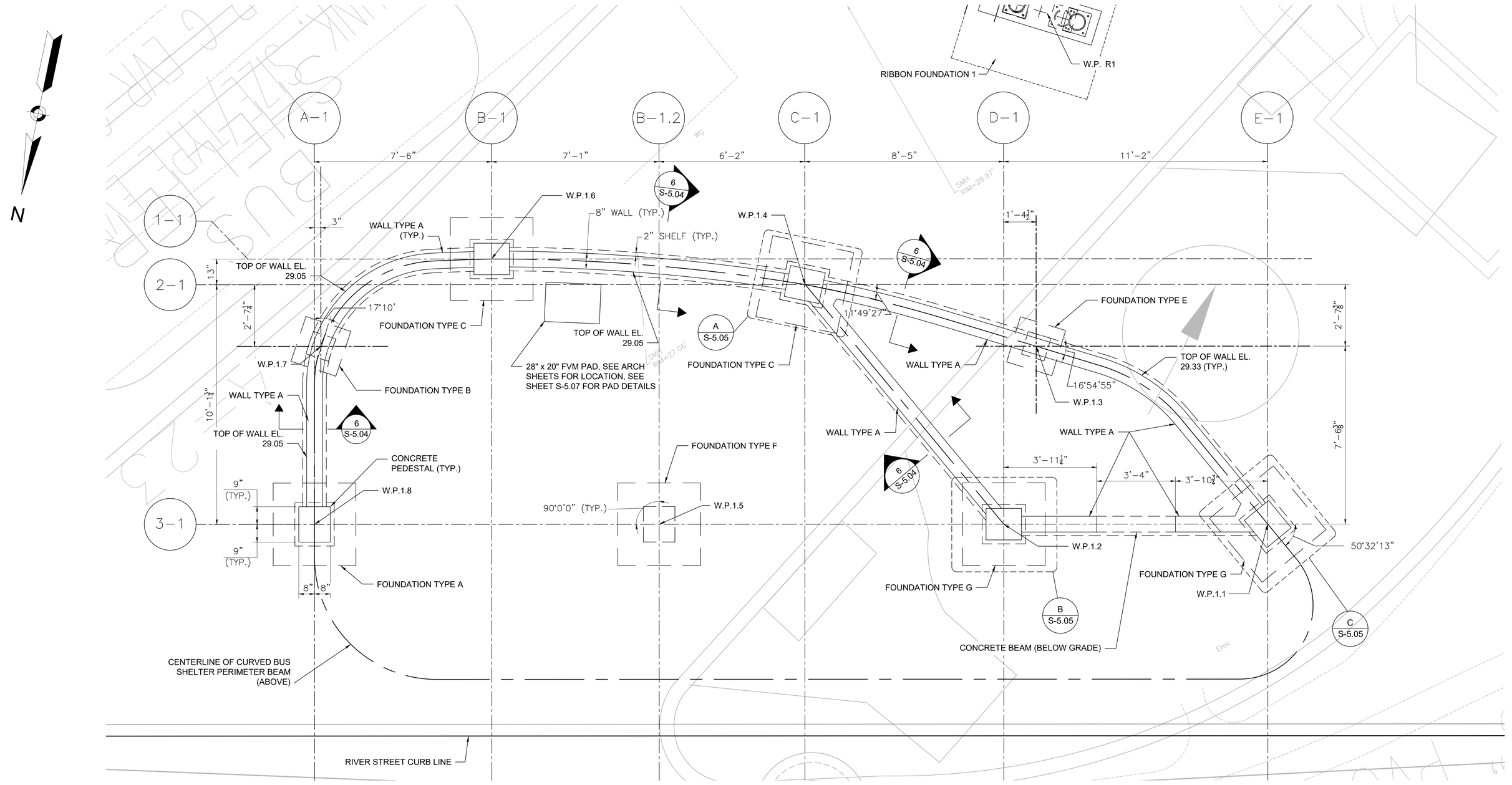

FOUNDATION PLAN - SHELTER 1

SCALE: 1/2" = 1'-0"

NOTES:

1. SEE SHEET S-2.01 FOR WORK POINT COORDINATES.
2. FOR BEAM CURVATURE SEE SHEET S-4.01.
3. FOR FOUNDATION TYPES A-G DETAILS SEE SHEETS S-5.04 & S-5.05.

0 2 4 6 8

SCALE: 1/2" = 1'-0"

CONFORMED SET

HDR ENGINEERING, INC.
99 HIGH STREET, SUITE 2300
BOSTON, MASSACHUSETTS 02110–2378
(617) 357–7700

MARIO LOCOCO CIVIL ENGINEER NO. 53117 REGISTERED PROFESSIONAL ENGINEER COMMONWEALTH OF MASSACHUSETTS
8/5/2022

Scale	AS SHOWN			
Date				
Job No.				
Designed by	LQ			
Drawn by	BF	0	CONFORMED SET	8/5/2022
Checked by	ML	No.	Description	Date
Approved by	JW	REVISIONS		

THE WORKS — CAMBRIDGE DEPARTMENT OF PUBLIC WORKS

Client	CITY OF CAMBRIDGE, MA	Sheet	S-3.01
Project	RIVER STREET INFRASTRUCTURE AND STREETSCAPE PROJECT	Total Sheets	381
Drawing	**SHELTER 1 GROUND LEVEL PLAN**	File No.	CNS

File: C:\PW\WORKING\EAST01\D1817056\7113XXX-TB.DWG Plotted: 3/17/2022 10:22:03 AM

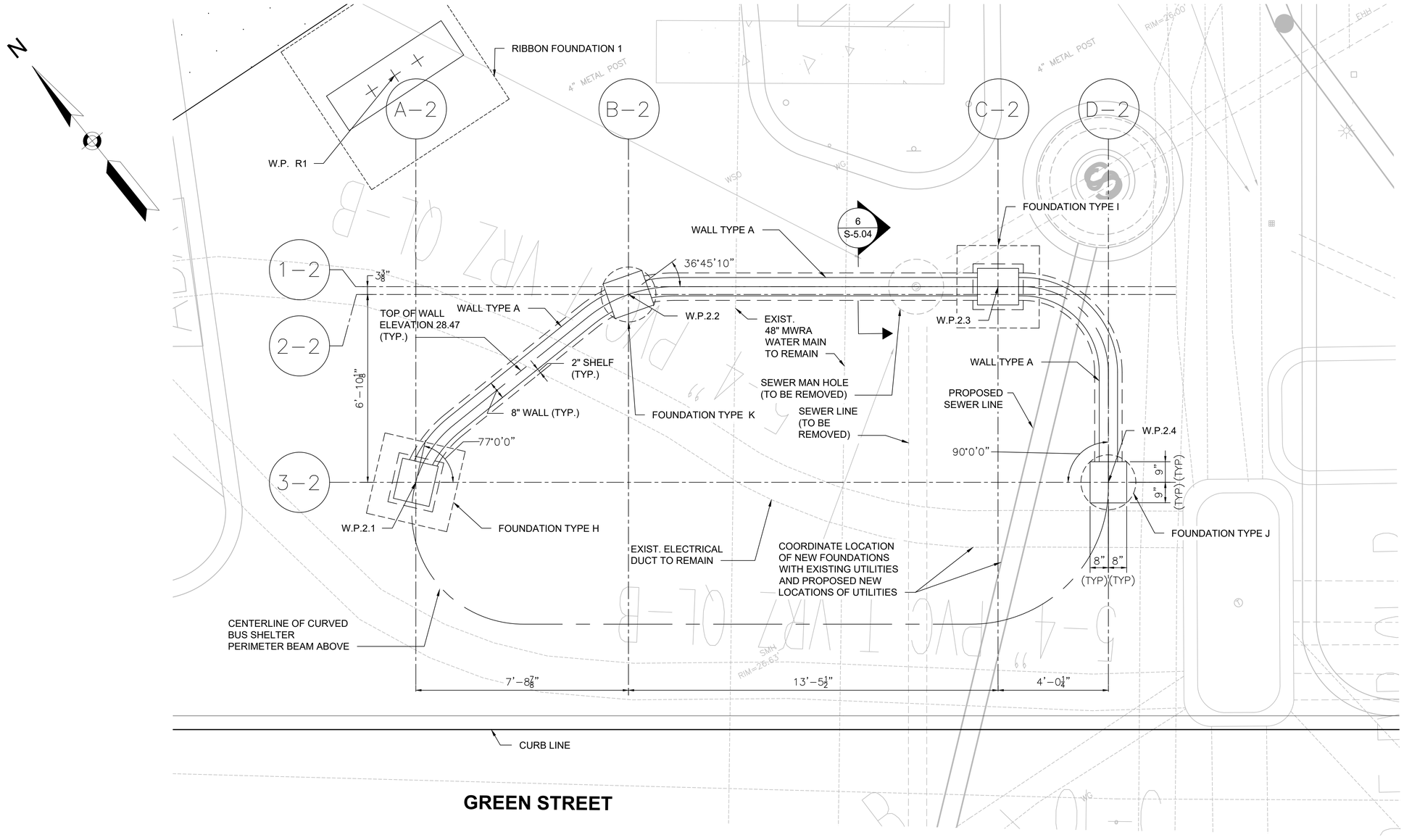

FOUNDATION PLAN - SHELTER 2

SCALE: 1/2" = 1'-0"

NOTES:

1. SEE SHEET S-2.01 FOR WORK POINT COORDINATES.
2. FOR BEAM CURVATURE SEE SHEET S-4.02.
3. FOR FOUNDATION TYPE H-J DETAILS SEE SHEET S-5.06

0 2 4 6 8

SCALE: 1/2" = 1'-0"

CONFORMED SET

HDR ENGINEERING, INC.
99 HIGH STREET, SUITE 2300
BOSTON, MASSACHUSETTS 02110–2378
(617) 357–7700

COMMONWEALTH OF MASSACHUSETTS
MARIO LOCOCO
CIVIL ENGINEER
NO. 53117
REGISTERED
PROFESSIONAL ENGINEER
8/5/2022

Scale	AS SHOWN			
Date				
Job No.				
Designed by				
Drawn by		0	CONFORMED SET	8/5/2022
Checked by		No.	Description	Date
Approved by		REVISIONS		

THE WORKS — CAMBRIDGE DEPARTMENT OF PUBLIC WORKS

Client	CITY OF CAMBRIDGE, MA	Sheet	S-3.02
Project	RIVER STREET INFRASTRUCTURE AND STREETSCAPE PROJECT	Total Sheets	381
Drawing	**SHELTER 2 GROUND LEVEL PLAN**	File No.	CNS

File: C:\PW\WORKING\EAST\D1\D1817057\S-302 - SHELTER 2 GROUND LEVEL PLAN.DWG Plotted: 8/15/2022 2:38:51 PM

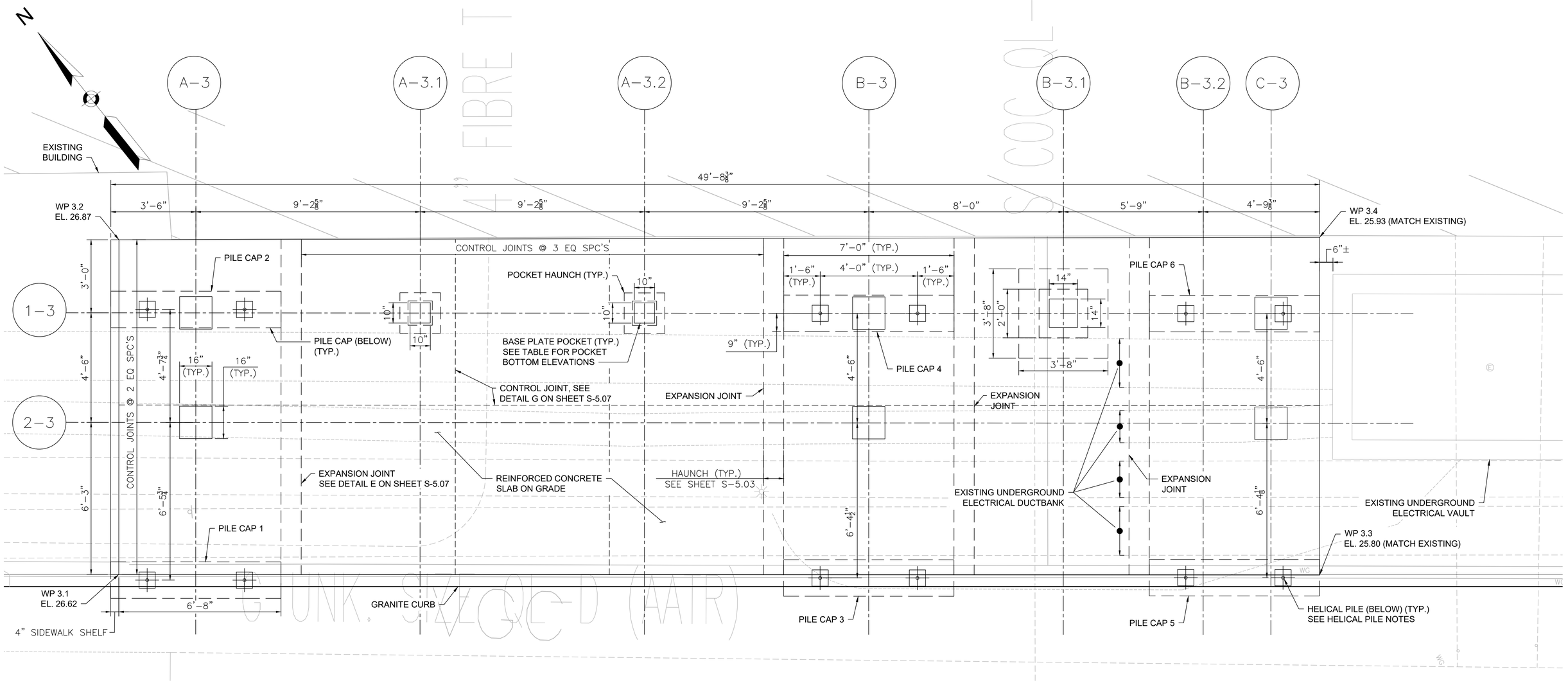

HELICAL PILE NOTES:

1. HELICAL PILES TO BE DESIGNED AND INSTALLED BY A QUALIFIED CONTRACTOR.
2. HELICAL LEAD SECTIONS AND EXTENSION SECTIONS SHALL BE SOLID STEEL, ROUNDED CORNERED SQUARE SHAFT OR ROUND PIPE SHAFT WITH ONE OR MORE HELICAL BEARING PLATES WELDED TO THE SHAFT.
3. ALL HELICAL PILES SHALL BE CORROSION PROTECTED BY HOT DIP GALVANIZATION.
4. INSTALLATION EQUIPMENT SHALL BE CAPABLE OF INSTALLING THE PILE AT THE PROPER INSTALLATION ANGLE.
5. INSTALLATION TORQUE SHALL BE MONITORED THROUGHOUT THE INSTALLATION PROCESS.
6. HELICAL PILES SHALL BE TORQUED TO RESIST A DESIGN ALLOWABLE AXIAL LOAD OF 25 KIPS.
7. PRIOR TO HELICAL PILE INSTALLATION, VACUUM EXCAVATION SHALL BE UTILIZED DOWN TO A MINIMUM OF 8 FOOT BELOW EXISTING GRADE. VACUUM EXCAVATION DIAMETER SHALL BE A MINIMUM DIAMETER EQUAL TO THE LARGEST HELIX DIAMETER. AFTER PILE INSTALLATION, BACKFILL VOID WITH 4,000 PSI TREMIE GROUT. IF ANY OBSTRUCTION IS ENCOUNTERED DURING THE VACUUM EXCAVATION, THE ENGINEER SHALL BE IMMEDIATELY NOTIFIED.
8. HELICAL PILES ARE TO BE DESIGNED TO RESIST THE ECCENTRIC LOADING AT PILEC APS 1, 3 AND 5.

FOUNDATION PLAN - SHELTER 3

SCALE: 1/2" = 1'-0"

ELEVATIONS AT THE BOTTOM OF POCKET			
COLUMN LINE	COLUMN LINE	POCKET DEPTH	POCKET ELEVATION
A3	1-3	4"	26.41'
A3	2-3	4"	26.34'
A3.1	1-3	3"	26.33'
A3.2	1-3	3"	26.16'
B3	1-3	4"	25.91'
B3	2-3	4"	25.85'
B3.1	2-3	4"	25.71'
C3	1-3	4"	25.62'
C3	2-3	4"	25.57'

ELEVATIONS AT TOP OF PILE CAPS	
PILE CAP	TOP OF PILE CAP ELEVATION
1	25.15'
2	25.35'
3	24.66'
4	24.83'
5	24.42'
6	24.55'

NOTES:

1. SEE SHEET S-2.01 FOR WORK POINT AND PILE LOCATION COORDINATES.
2. SEE SHEET S-5.07 FOR FOUNDATION DETAILS

0 2 4 6 8

SCALE: 1/2" = 1'-0"

CONFORMED SET

HDR ENGINEERING, INC.
99 HIGH STREET, SUITE 2300
BOSTON, MASSACHUSETTS 02110–2378
(617) 357–7700

COMMONWEALTH OF MASSACHUSETTS MARIO LOCOCO CIVIL ENGINEER NO. 53117 REGISTERED PROFESSIONAL ENGINEER 8/5/2022

Scale	AS SHOWN			
Date				
Job No.				
Designed by	BF			
Drawn by	BF	0	CONFORMED SET	8/5/2022
Checked by	ML	No.	Description	Date
Approved by	JW	REVISIONS		

THE WORKS — CAMBRIDGE DEPARTMENT OF PUBLIC

Client	CITY OF CAMBRIDGE, MA
Project	RIVER STREET INFRASTRUCTURE AND STREETSCAPE PROJECT
Drawing	**SHELTER 3 GROUND LEVEL PLAN**
Sheet	S-3.03
Total Sheets	381
File No.	CNS

File: C:\PW\WORKING\EAST01\D1817057\S-303 - SHELTER 3 GROUND LEVEL PLAN.DWG Plotted: 8/15/2022 2:39:25 PM

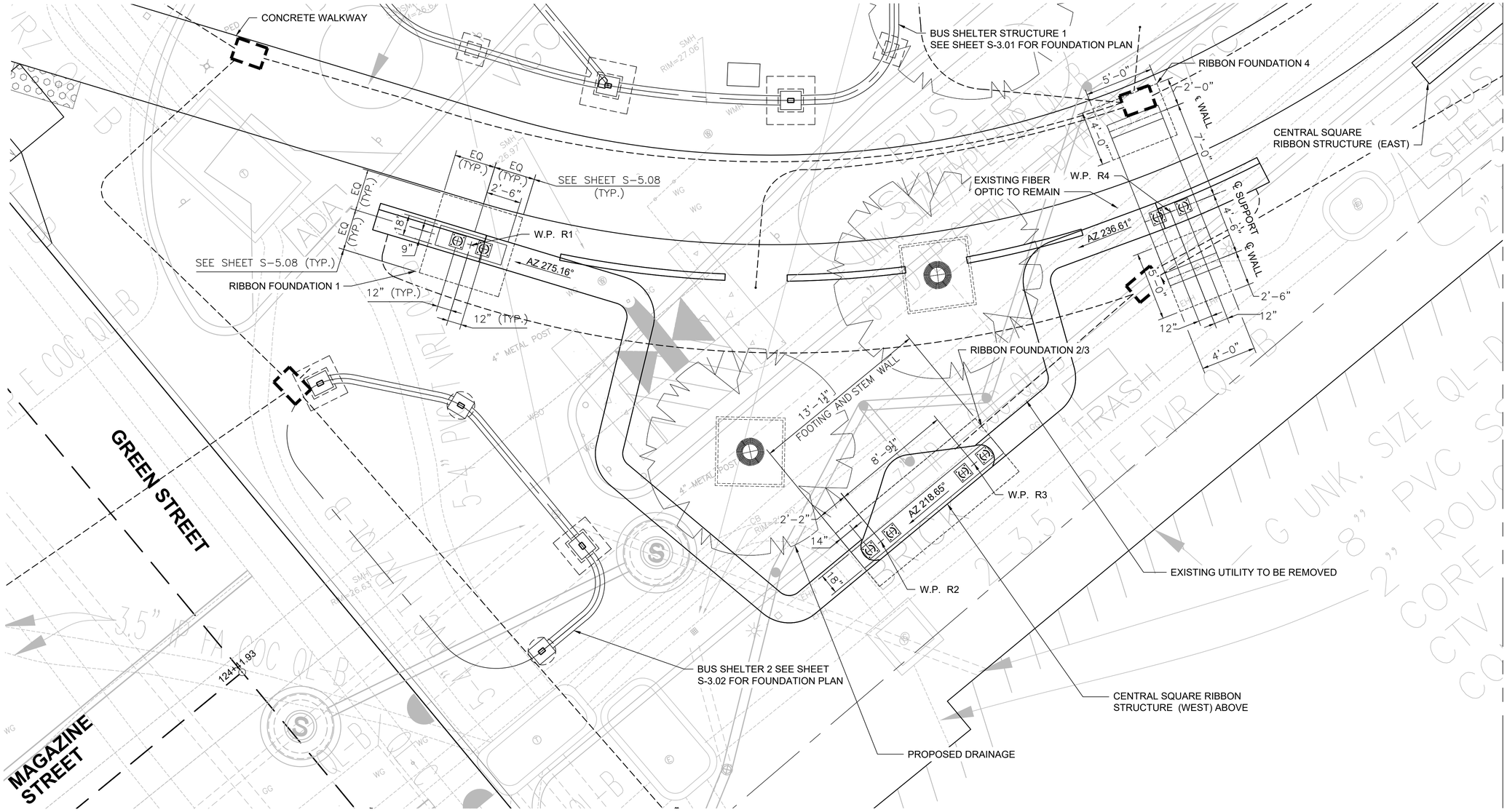

NOTES

1. SEE SHEET S-2.01 FOR WORK POINTS AND COORDINATES.
2. FOR DETAILS OF RIBBON FOUNDATIONS SEE SHEET S-5.08.
3. AZIMUTHS PROVIDED ALONG CENTERLINE OF FOOTING AND FOLLOW LONGITUDINAL DIRECTION OF THE RIBBON STRUCTURE.

FOUNDATION PLAN - RIBBON STRUCTURE (WEST)

SCALE: 1/4" = 1'-0"

0 4 8 12 16

SCALE: 1/4" = 1'-0"

CONFORMED SET

HDR ENGINEERING, INC.
99 HIGH STREET, SUITE 2300
BOSTON, MASSACHUSETTS 02110-2378
(617) 357-7700

MARIO LOCOCO CIVIL ENGINEER NO. 53117 REGISTERED PROFESSIONAL ENGINEER
COMMONWEALTH OF MASSACHUSETTS
8/5/2022

Scale	AS SHOWN			
Date				
Job No.				
Designed by	TW			
Drawn by	TW	0	CONFORMED SET	8/5/2022
Checked by	ML	No.	Description	Date
Approved by	JW	REVISIONS		

THE WORKS — CAMBRIDGE DEPARTMENT OF PUBLIC

Client	CITY OF CAMBRIDGE, MA	Sheet	S-3.04
Project	RIVER STREET INFRASTRUCTURE AND STREETSCAPE PROJECT	Total Sheets	381
Drawing	**RIBBON STRUCTURE GROUND LEVEL PLAN (1 OF 2)**	File No.	CNS

File: C:\PW\WORKING\EAST01\D1817057\S-304 - RIBBON GROUND LEVEL PLAN (1 OF 2).DWG Plotted: 8/15/2022 2:39:59 PM

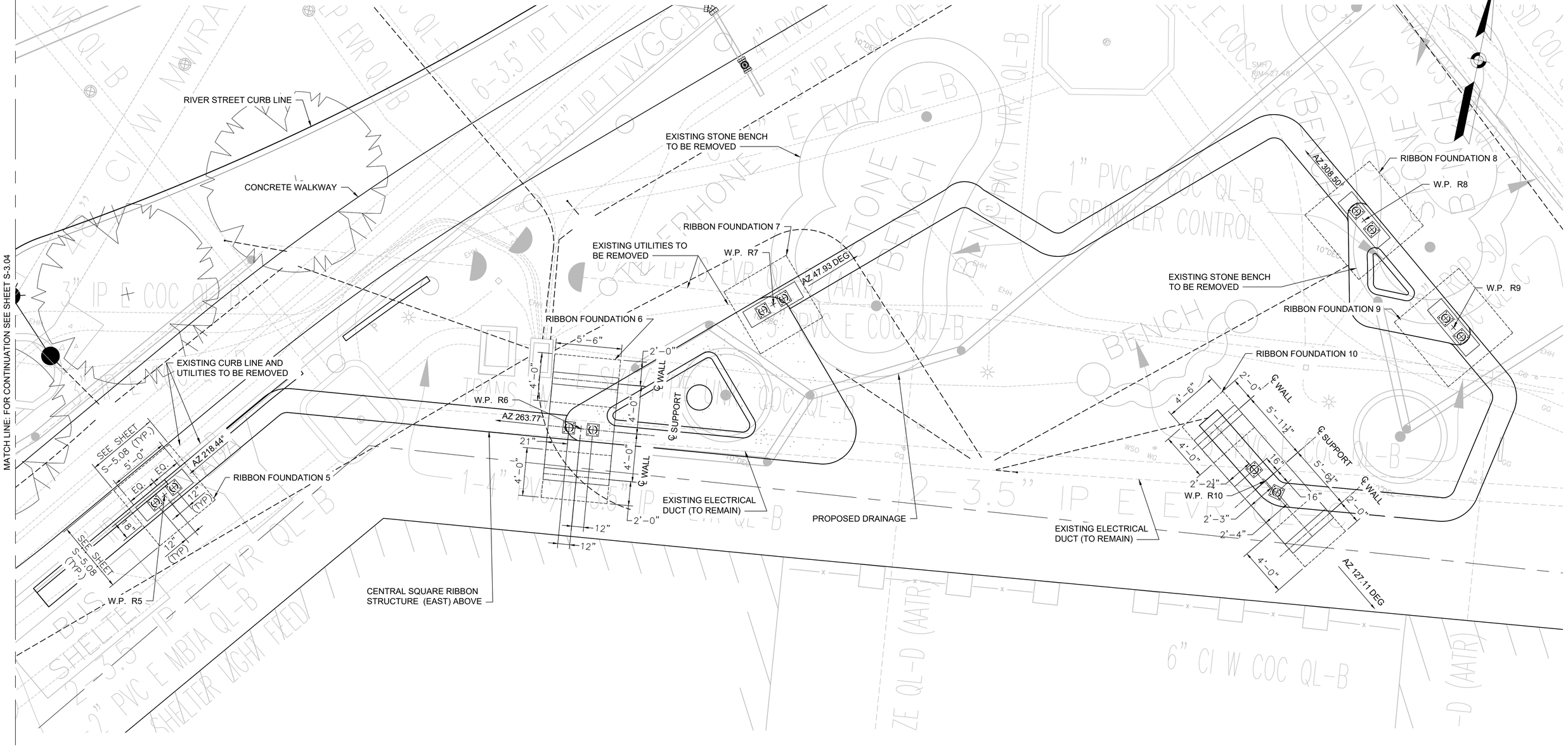

FOUNDATION PLAN - RIBBON STRUCTURE (EAST)

SCALE: 1" = 4'-0"

NOTES

1. SEE SHEET S-1.01 FOR WORK POINTS AND COORDINATES.
2. FOR DETAILS OF RIBBON FOUNDATIONS SEE SHEET S-5.08.

0 4 8 12 16

SCALE: 1" = 4'

CONFORMED SET

HDR ENGINEERING, INC.
99 HIGH STREET, SUITE 2300
BOSTON, MASSACHUSETTS 02110-2378
(617) 357-7700

MARIO LOCOCO CIVIL ENGINEER NO. 52117 REGISTERED PROFESSIONAL ENGINEER
COMMONWEALTH OF MASSACHUSETTS
8/5/2022

Scale	AS SHOWN			
Date				
Job No.				
Designed by	TW			
Drawn by	TW	0	CONFORMED SET	8/5/2022
Checked by	ML	No.	Description	Date
Approved by	JW	REVISIONS		

THE WORKS — CAMBRIDGE DEPARTMENT OF PUBLIC WORKS

Client	CITY OF CAMBRIDGE, MA	Sheet	S-3.05
Project	RIVER STREET INFRASTRUCTURE AND STREETSCAPE PROJECT	Total Sheets	381
Drawing	**RIBBON STRUCTURE GROUND LEVEL PLAN (2 OF 2)**	File No.	CNS

File: C:\PWWORKING\EAST01\D1817057\S-305 - RIBBON GROUND LEVEL PLAN (2 OF 2).DWG Plotted: 8/15/2022 2:40:38 PM

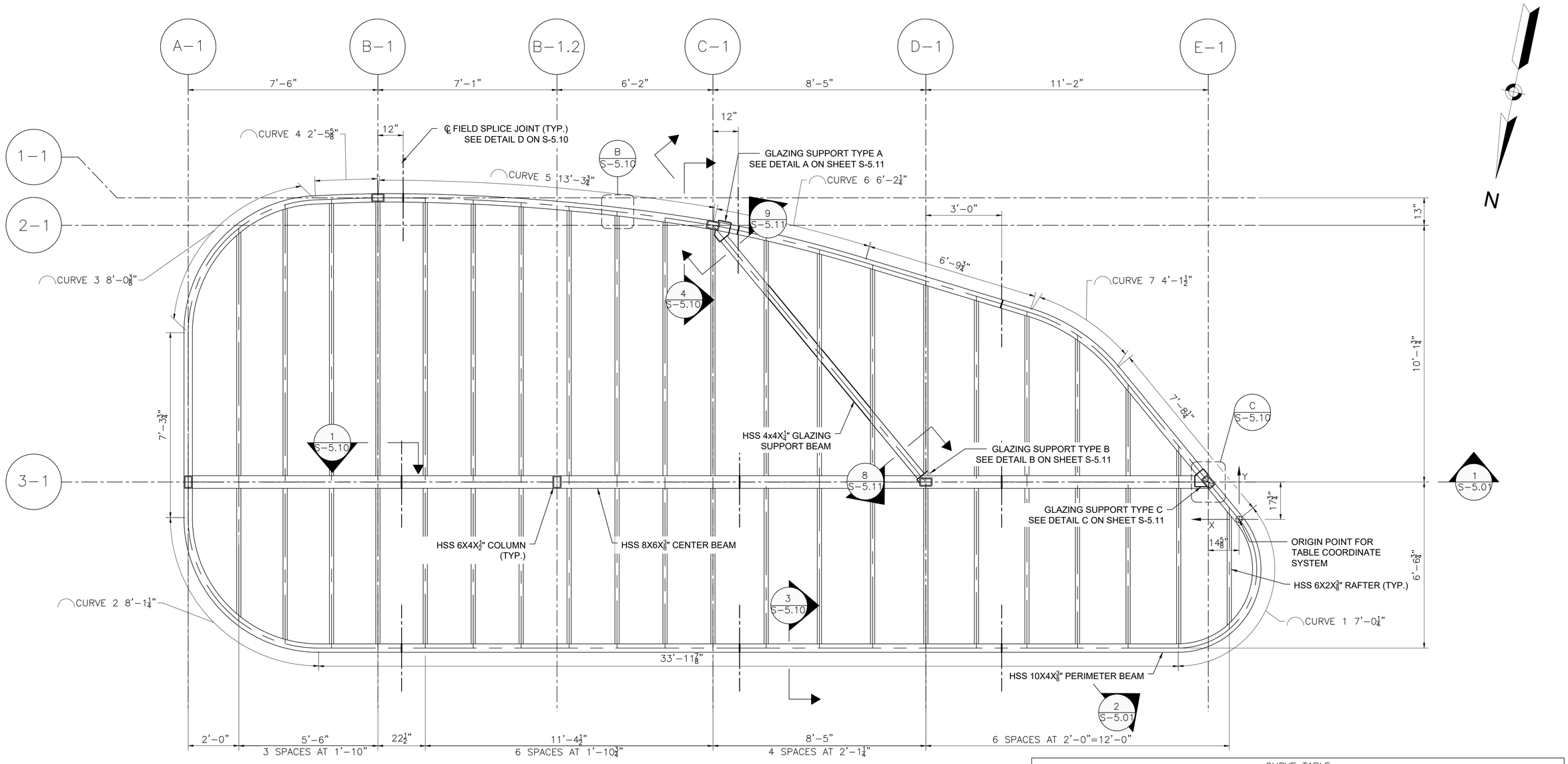

NOTES:

1. ALL ROOF STRUCTURE CONNECTIONS TO BE SHOP WELDED, WITH EXCEPTION OF PERIMETER BEAM AND CENTER BEAM SPLICE CONNECTIONS WHICH ARE TO BE FIELD WELDED. FOR MORE CONNECTION DETAILS, SEE SECTIONS ON SHEET S–5.10.
2. CENTERLINE OF PERIMETER BEAM IS TAKEN AT THE BOTTOM OF THE BOTTOM FLANGE OF HSS, SEE SECTION 4 ON SHEET S–5.10 FOR MORE INFORMATION ON WHERE THE CENTERLINE IS TAKEN.
3. CURVE DIMENSIONS ARE PROVIDED AT THE CENTERLINE OF THE HSS AT THE BOTTOM OF THE BOTTOM FLANGE.
4. FIELD SPLICE LOCATIONS ARE SUGGESTED, CONTRACTOR CAN SUBMIT ALTERNATIVE LOCATIONS FOR FIELD SPLICING WHICH WILL BE SUBJECT TO ENGINEERS APPROVAL.
5. CONTRACTOR MUST SUBMIT AN ERECTION PROCEDURE FOR REVIEW AND APPROVAL.

FRAMING PLAN – SHELTER 1

SCALE: ½" = 1'–0"

CURVE TABLE					
CURVE	PC		PT		CURVE RADIUS
	X	Y	X	Y	
1	0'–0"	0'–0"	2'–4 7/8"	–5'–1 1/16"	3'–1 3/8"
2	36'–4 13/16"	–5'–1 1/16"	41'–6 11/16"	–0'–0 13/16"	5'–1 7/8"
3	41'–6 11/16"	7'–4 9/16"	36'–6 5/16"	12'–7 1/2"	5'–3"
4	36'–6 5/16"	12'–7 1/2"	34'–0 11/16"	12'–8 9/16"	119'–2 3/4"
5	34'–0 11/16"	12'–8 9/16"	20'–9 11/16"	11'–7 1/2"	79'–10"
6	20'–9 11/16"	11'–7 1/2"	14'–9 9/16"	8'–2 1/8"	58'–2 11/16"
7	8'–3 5/16"	8'–2 1/8"	4'–10 5/8"	5'–11 1/4"	7'–2"

CONFORMED SET

HDR ENGINEERING, INC.
99 HIGH STREET, SUITE 2300
BOSTON, MASSACHUSETTS 02110–2378
(617) 357–7700

MARIO LOCOCO CIVIL ENGINEER NO. 53117 REGISTERED PROFESSIONAL ENGINEER
COMMONWEALTH OF MASSACHUSETTS
8/5/2022

Scale	AS SHOWN			
Date				
Job No.				
Designed by	TW			
Drawn by	TW	0	CONFORMED SET	8/5/2022
Checked by	ML	No.	Description	Date
Approved by	JW	REVISIONS		

CAMBRIDGE DEPARTMENT OF PUBLIC WORKS

Client	CITY OF CAMBRIDGE, MA
Project	RIVER STREET INFRASTRUCTURE AND STREETSCAPE PROJECT
Drawing	**SHELTER 1 ROOF FRAMING PLAN**
Sheet	S-4.01
Total Sheets	381
File No.	CNS

File: C:\PW\WORKING\EAST\01D1817057\S-401 - SHELTER 1 ROOF FRAMING PLAN.DWG Plotted: 8/15/2022 2:40:47 PM

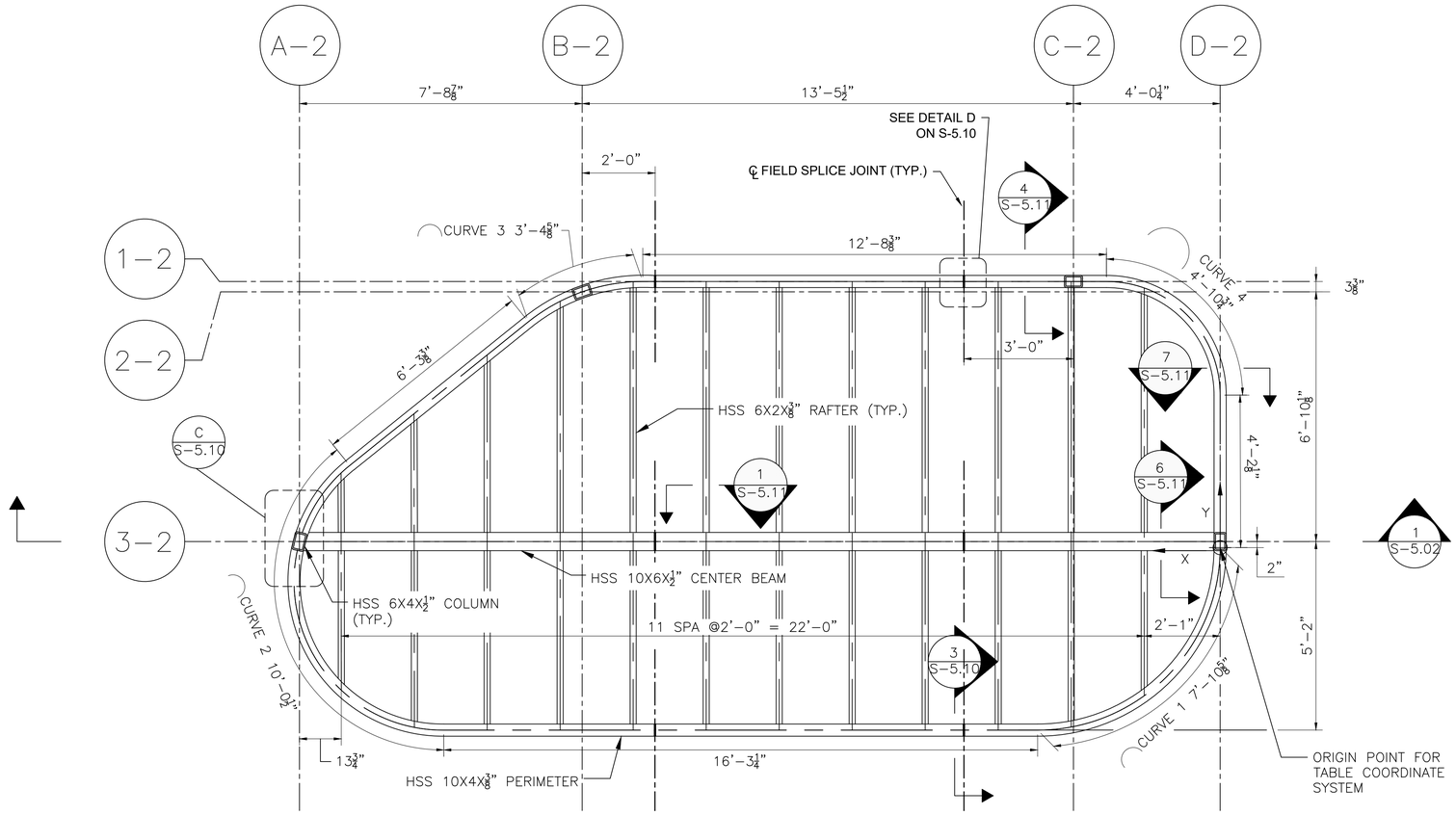

FRAMING PLAN – SHELTER 2

SCALE: 1/2" = 1'–0"

CURVE TABLE					
CURVE	PC		PT		CURVE RADIUS
	X	Y	X	Y	
1	0'–0"	0'–0"	5'–0"	–5'–0"	5'–0"
2	21'–3 1/4"	–5'–0"	23'–9 15/16"	2'–3 3/16"	4'–0 7/8"
3	18'–11 3/8"	6'–2 1/4"	15'–9 13/16"	7'–3 1/2"	5'–0"
4	3'–1 3/8"	7'–3 1/2"	0'–0"	4'–2 1/8"	3'–1 3/8"

NOTES:

1. SEE SHEETS S–4.01 FOR NOTES.

File: C:\PWWORKING\EAST01\D1817057\S-402- SHELTER 2 ROOF FRAMING PLAN.DWG Plotted: 8/15/2022 2:40:52 PM

CONFORMED SET

HDR ENGINEERING, INC.
99 HIGH STREET, SUITE 2300
BOSTON, MASSACHUSETTS 02110–2378
(617) 357–7700

MARIO LOCOCO CIVIL ENGINEER NO. 53117 REGISTERED PROFESSIONAL ENGINEER COMMONWEALTH OF MASSACHUSETTS
8/5/2022

Scale	AS SHOWN			
Date				
Job No.				
Designed by	TW			
Drawn by	TW	0	CONFORMED SET	8/5/2022
Checked by	ML	No.	Description	Date
Approved by	JW	REVISIONS		

THE WORKS CAMBRIDGE DEPARTMENT OF PUBLIC WORKS

Client	CITY OF CAMBRIDGE, MA
Project	RIVER STREET INFRASTRUCTURE AND STREETSCAPE PROJECT
Drawing	**SHELTER 2 ROOF FRAMING PLAN**
Sheet	S-4.02
Total Sheets	381
File No.	CNS

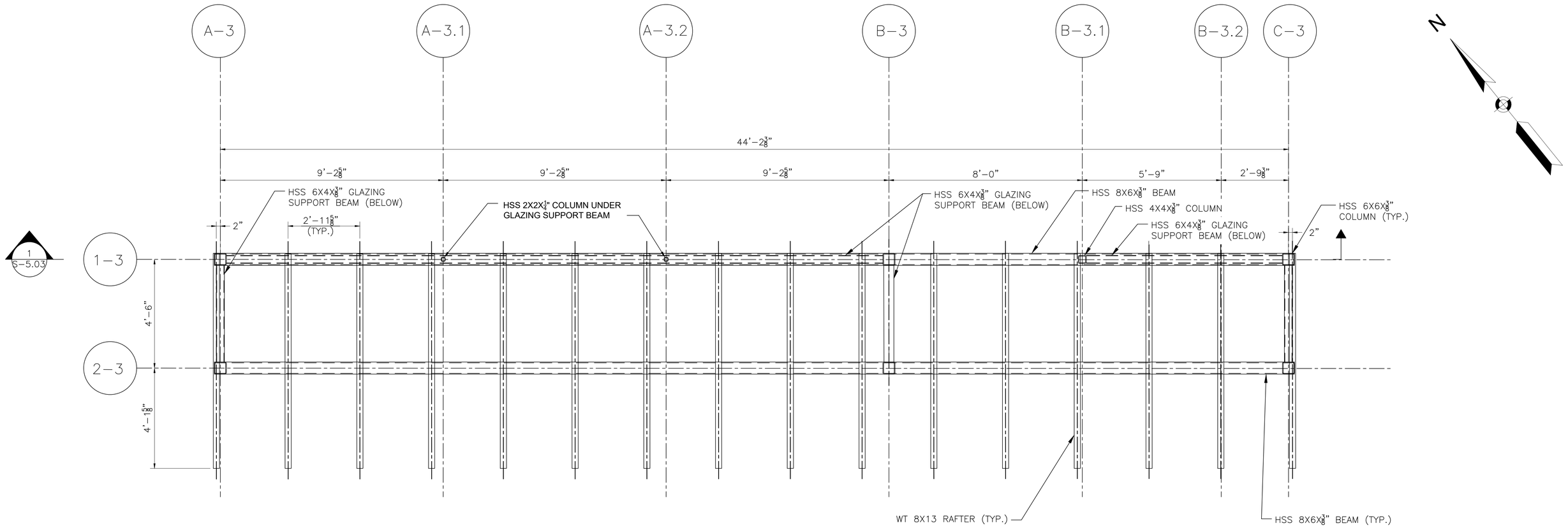

FRAMING PLAN – SHELTER 3

SCALE: 1/2" = 1'–0"

CONFORMED SET

HDR ENGINEERING, INC.
99 HIGH STREET, SUITE 2300
BOSTON, MASSACHUSETTS 02110–2378
(617) 357–7700

MARIO LOCOCO
CIVIL ENGINEER
NO. 52117
COMMONWEALTH OF MASSACHUSETTS
REGISTERED PROFESSIONAL ENGINEER
8/5/2022

Scale	AS SHOWN			
Date				
Job No.				
Designed by	TW			
Drawn by	BF	0	CONFORMED SET	8/5/2022
Checked by	ML	No.	Description	Date
Approved by	JW	REVISIONS		

THE WORKS
CAMBRIDGE DEPARTMENT OF PUBLIC WORKS

Client	CITY OF CAMBRIDGE, MA	Sheet	S-4.03
Project	RIVER STREET INFRASTRUCTURE AND STREETSCAPE PROJECT	Total Sheets	381
Drawing	**SHELTER 3 ROOF FRAMING PLAN**	File No.	CNS

File: C:\PWWORKING\EAST01\D1817057\S-403 - SHELTER 3 ROOF FRAMING PLAN.DWG Plotted: 8/15/2022 2:40:57 PM

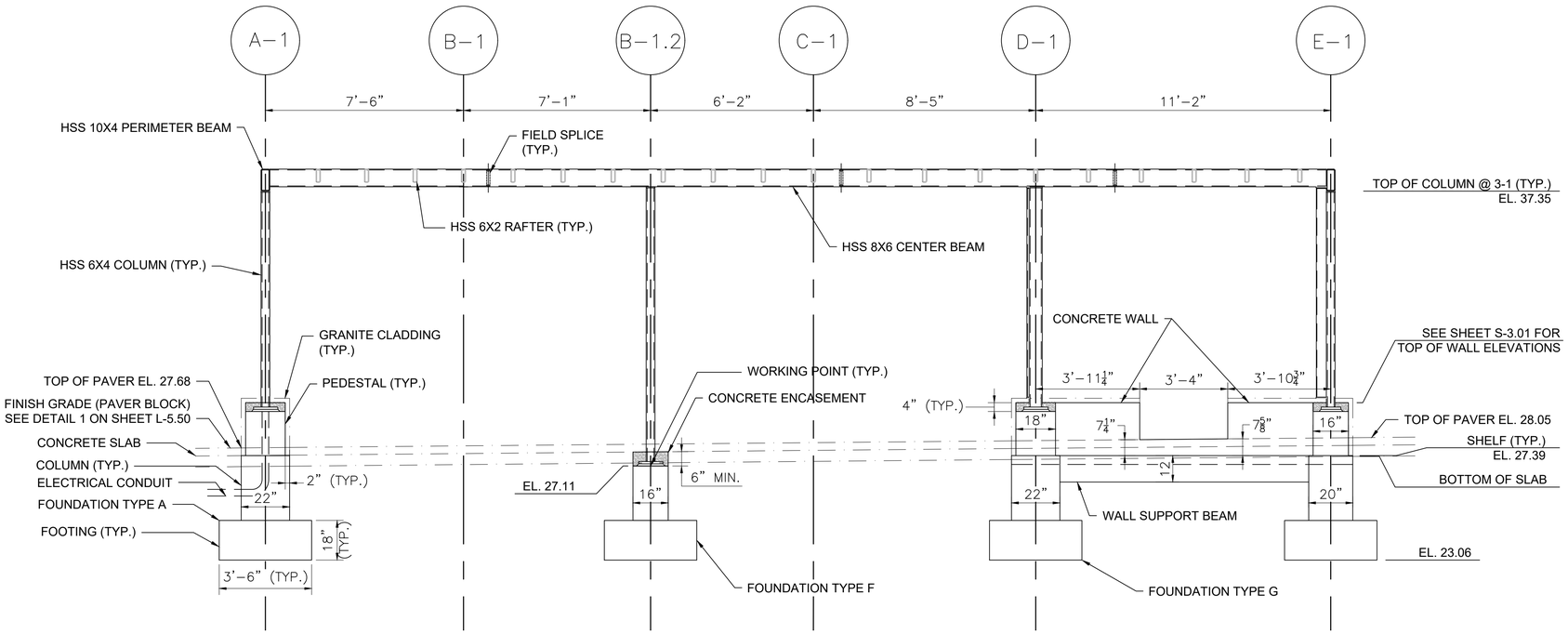

NOTE: COLUMNS AT COLUMN LINES B–1 AND C–1 BEYOND ARE NOT SHOWN FOR CLARITY.

SECTION AT COLUMN LINE 3–1 (1 / S-4.01)
SCALE: 3/8" = 1'–0"

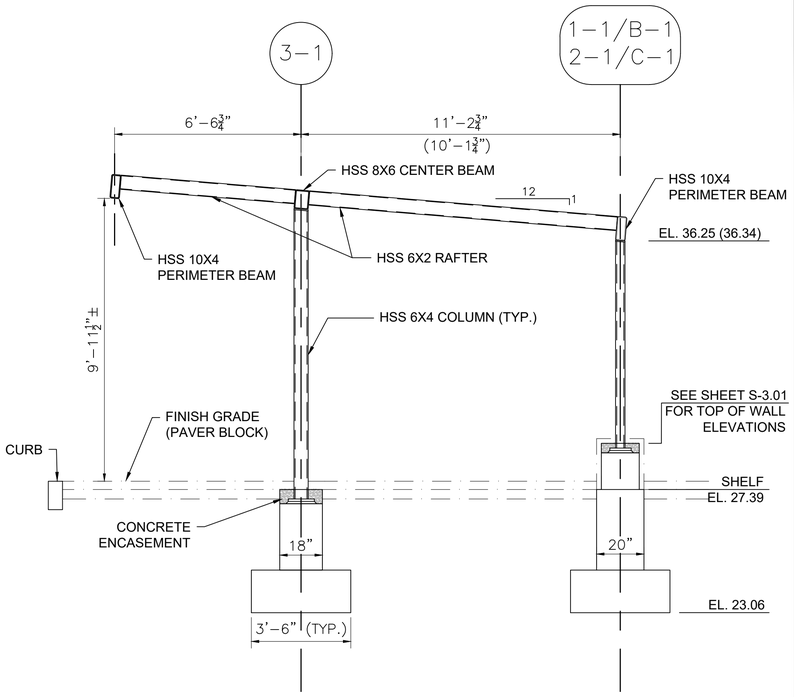

TRANSVERSE SECTIONS AT COLUMN LINES B–1 AND C–1
SCALE: 3/8" = 1'–0"

NOTE: DIMENSIONS IN () REFLECT DIMENSIONS AT COLUMN LINE C–1.

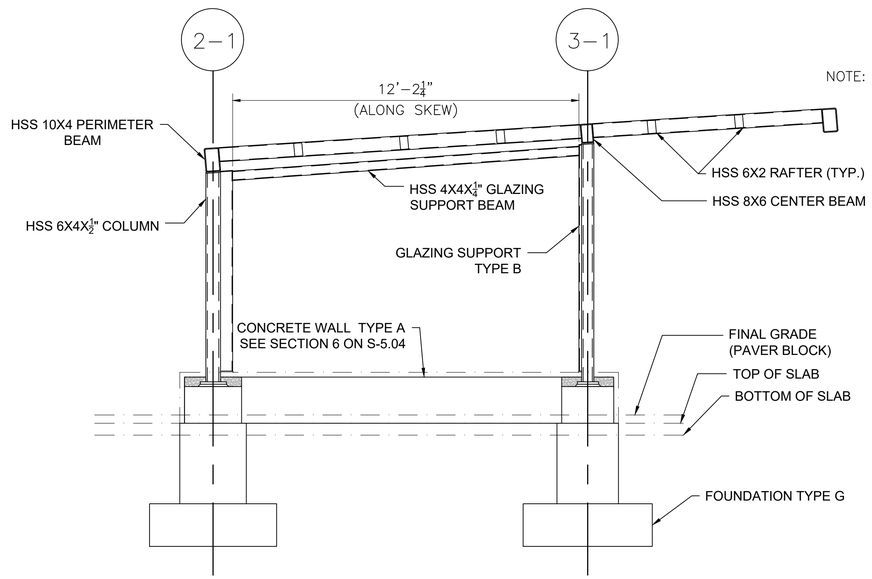

SECTION (2 / S-4.01)
SCALE: 3/8" = 1'–0"

CONFORMED SET

HDR ENGINEERING, INC.
99 HIGH STREET, SUITE 2300
BOSTON, MASSACHUSETTS 02110–2378
(617) 357–7700

COMMONWEALTH OF MASSACHUSETTS — MARIO LOCOCO — CIVIL ENGINEER NO. 53117 — REGISTERED PROFESSIONAL ENGINEER
8/5/2022

Scale	AS SHOWN			
Date				
Job No.				
Designed by	TW			
Drawn by	TW	0	CONFORMED SET	8/5/2022
Checked by	ML	No.	Description	Date
Approved by	JW	REVISIONS		

THE WORKS — CAMBRIDGE DEPARTMENT OF PUBLIC WORKS

Client	CITY OF CAMBRIDGE, MA
Project	RIVER STREET INFRASTRUCTURE AND STREETSCAPE PROJECT
Drawing	**SHELTER 1 SECTIONS**
Sheet	S-5.01
Total Sheets	381
File No.	CNS

PM
File: C:\PWWORKINGEAST01\D1817057\S-501 - SHELTER 1 ELEVATION.DWG Plotted: 8/15/2022 2:41:02

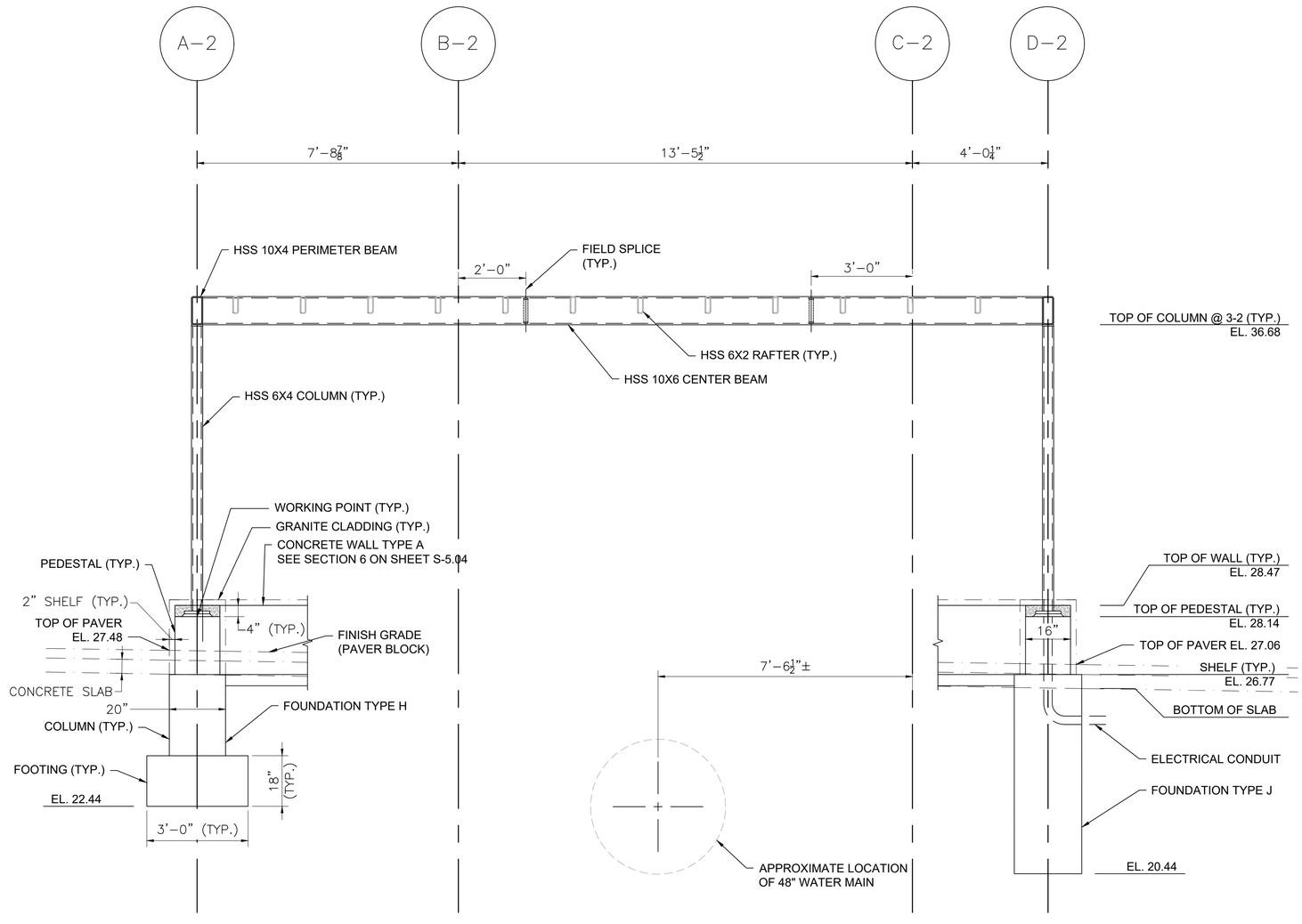

SECTION AT COLUMN LINE 3–2 (1 / S-4.02)
SCALE: 1/2" = 1'–0"

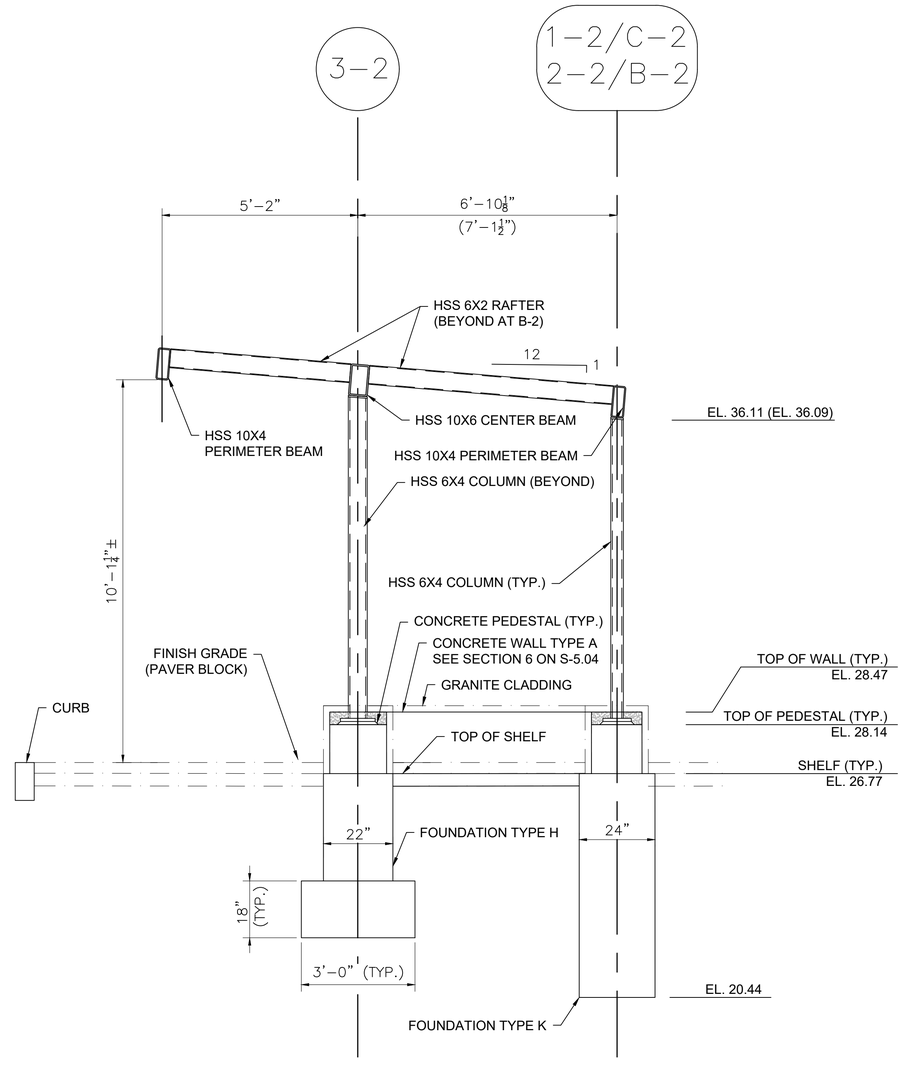

TRANSVERSE SECTION AT COLUMN LINES B–2 & C–2
SCALE: 1/2" = 1'–0"

NOTES:

1. SEE SHEET S–5.06 FOR SHELTER 2 FOUNDATION DETAILS

NOTE: DIMENSIONS IN () REFLECT DIMENSIONS AT COLUMN LINE C–2.

CONFORMED SET

HDR ENGINEERING, INC.
99 HIGH STREET, SUITE 2300
BOSTON, MASSACHUSETTS 02110–2378
(617) 357–7700

MARIO LOCOCO CIVIL ENGINEER NO. 53117 REGISTERED PROFESSIONAL ENGINEER COMMONWEALTH OF MASSACHUSETTS
8/5/2022

Scale	AS SHOWN			
Date				
Job No.				
Designed by	TW			
Drawn by	TW	0	CONFORMED SET	8/5/2022
Checked by	ML	No.	Description	Date
Approved by	JW	REVISIONS		

THE WORKS — CAMBRIDGE DEPARTMENT OF PUBLIC WORKS

Client: CITY OF CAMBRIDGE, MA
Project: RIVER STREET INFRASTRUCTURE AND STREETSCAPE PROJECT
Drawing: **SHELTER 2 SECTIONS**
Sheet: S-5.02
Total Sheets: 381
File No.: CNS

File: C:\PW\WORKINGEAST\01D1817057\S-502 - SHELTER 2 ELEVATION.DWG Plotted: 8/15/2022 2:41:09 PM

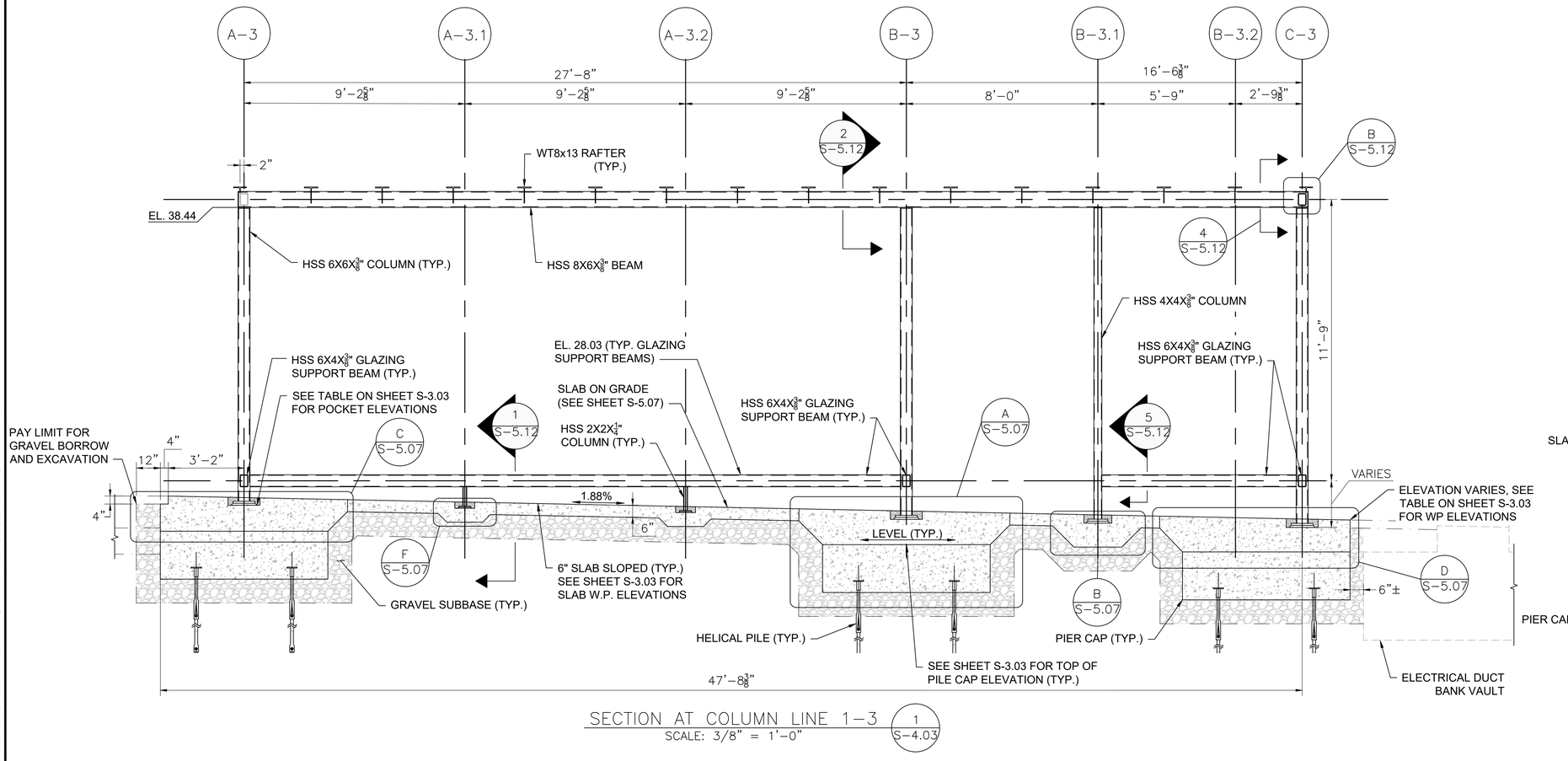

SECTION AT COLUMN LINE 1–3 (1 S-4.03)
SCALE: 3/8" = 1'–0"

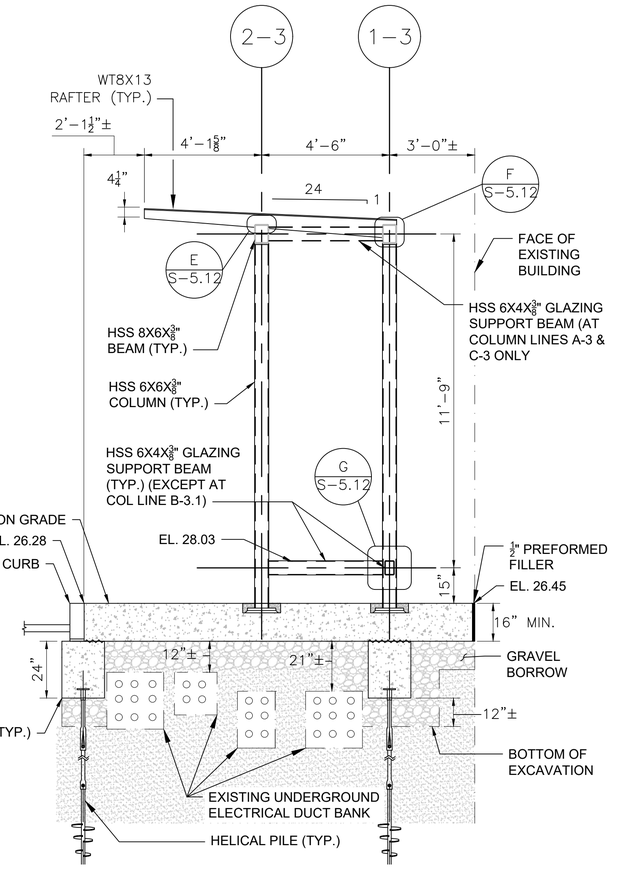

TRANSVERSE SECTION AT COLUMN LINE B–3
SCALE: 3/8" = 1'–0"

NOTE:
TRANSVERSE SECTION AT COLUMN LINES A-3, B-3.1 & C-3 ARE SIMILAR, DIMENSIONS AND ELEVATIONS SHOWN ARE FOR SECTION AT COLUMN LINE B-3 ONLY.

NOTES:

1. SLAB ON GRADE SHALL HAVE A BROOM FINISH.
2. SLAB SHALL BE COATED WITH WATER REPELLENT PER THE SPECIFICATIONS.

CONFORMED SET

HDR ENGINEERING, INC.
99 HIGH STREET, SUITE 2300
BOSTON, MASSACHUSETTS 02110–2378
(617) 357–7700

COMMONWEALTH OF MASSACHUSETTS — MARIO LOCOCO — CIVIL ENGINEER NO. 53117 — REGISTERED PROFESSIONAL ENGINEER — 8/5/2022

Scale	AS SHOWN			
Date				
Job No.				
Designed by	TW			
Drawn by	BF	0	CONFORMED SET	8/5/2022
Checked by	ML	No.	Description	Date
Approved by	JW	REVISIONS		

THE WORKS — CAMBRIDGE DEPARTMENT OF PUBLIC WORKS

Client	CITY OF CAMBRIDGE, MA	Sheet	S-5.03
Project	RIVER STREET INFRASTRUCTURE AND STREETSCAPE PROJECT	Total Sheets	381
Drawing	**SHELTER 3 SECTIONS**	File No.	CNS

File: C:\PW\WORKING\EAST01\D1817057\S-503 - SHELTER 3 ELEVATION.DWG Plotted: 8/15/2022 2:41:15 PM

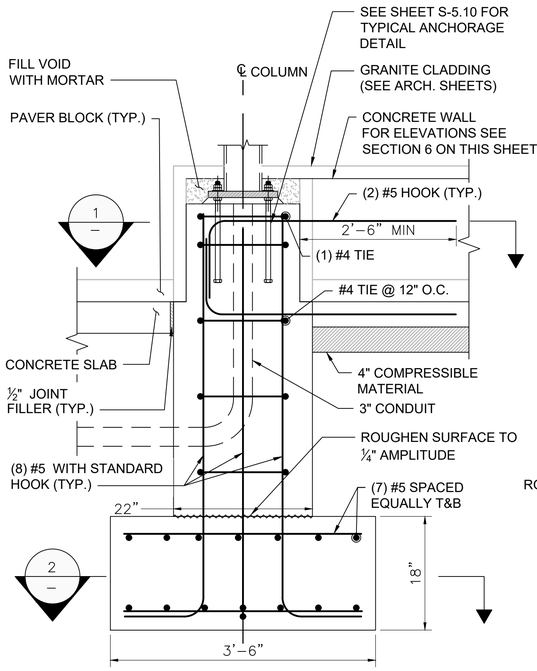

FOUNDATION TYPE A
SCALE: 1" = 1'–0"

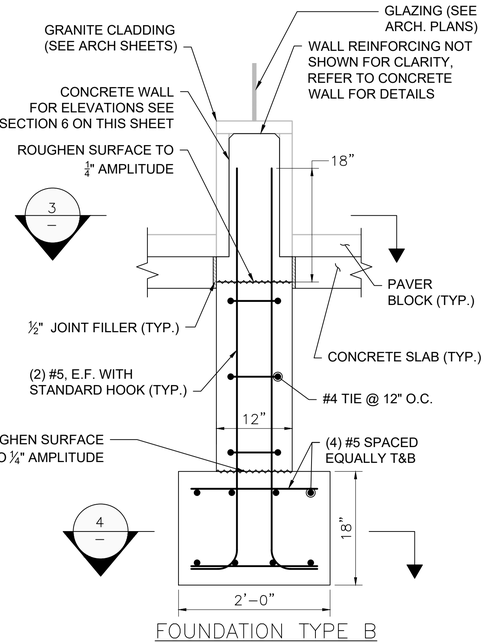

FOUNDATION TYPE B
SCALE: 1" = 1'–0"

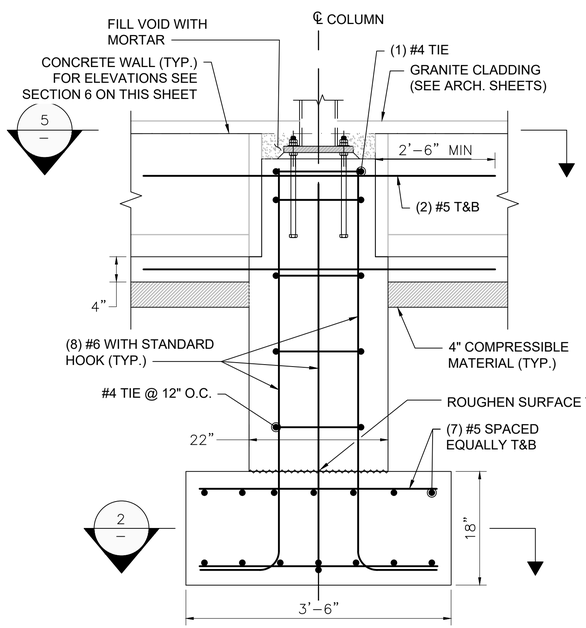

FOUNDATION TYPE C
SCALE: 1" = 1'–0"

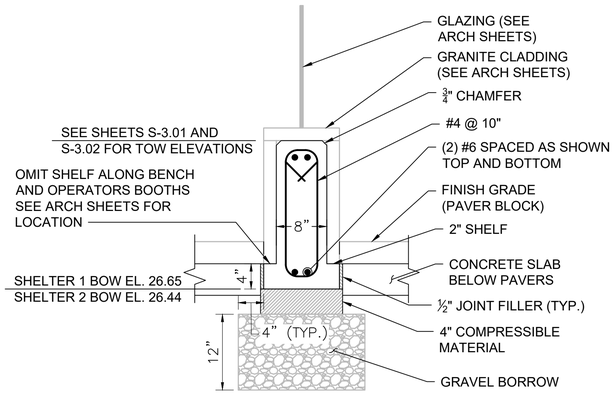

CONCRETE WALL TYPE A – SECTION 6 S-3.01
SCALE: 1" = 1'–0"

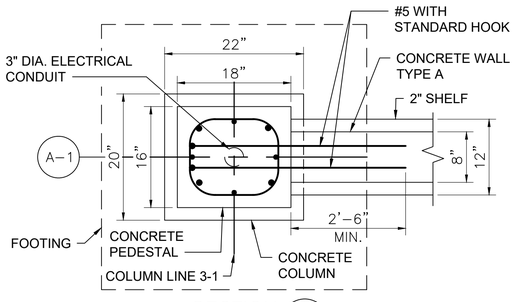

SECTION 1
SCALE: 1" = 1'–0"

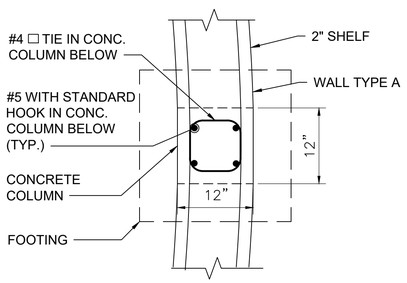

SECTION 3
SCALE: 1" = 1'–0"

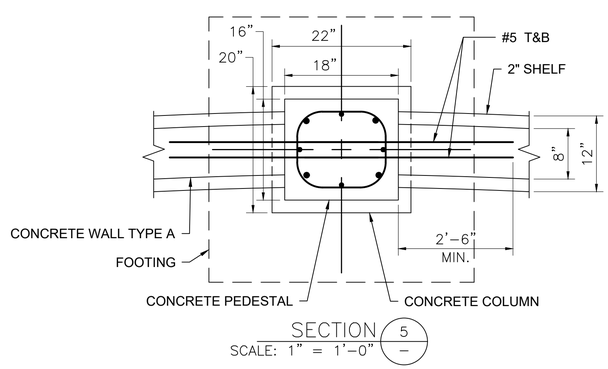

SECTION 5
SCALE: 1" = 1'–0"

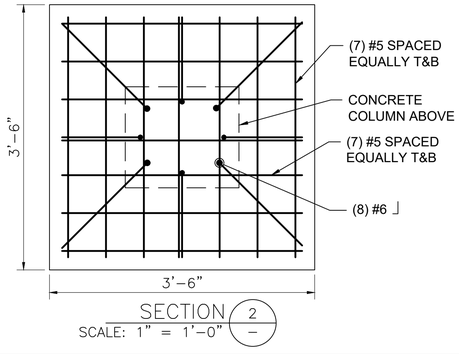

SECTION 2
SCALE: 1" = 1'–0"

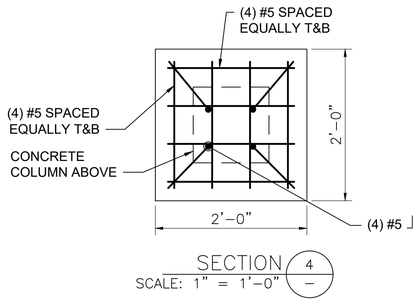

SECTION 4
SCALE: 1" = 1'–0"

CONFORMED SET

HDR ENGINEERING, INC.
99 HIGH STREET, SUITE 2300
BOSTON, MASSACHUSETTS 02110–2378
(617) 357–7700

MARIO LOCOCO CIVIL ENGINEER NO. 53117 REGISTERED PROFESSIONAL ENGINEER
COMMONWEALTH OF MASSACHUSETTS
8/5/2022

Scale	AS SHOWN			
Date				
Job No.	10139379			
Designed by	LQ			
Drawn by	BF	0	CONFORMED SET	8/5/2022
Checked by	ML	No.	Description	Date
Approved by	JW	REVISIONS		

THE WORKS — CAMBRIDGE DEPARTMENT OF PUBLIC WORKS

Client	CITY OF CAMBRIDGE, MA	Sheet	S-5.04
Project	RIVER STREET INFRASTRUCTURE AND STREETSCAPE PROJECT	Total Sheets	381
Drawing	**SHELTER 1 FOUNDATION DETAILS (1 OF 2)**	File No.	CNS

Plotted: 8/15/2022 2:41:47 PM
File: C:\PWWORKING\EAST01\D1817057\S-504 - SHELTER 1 FOUNDATION DETAILS (1 OF 2).DWG

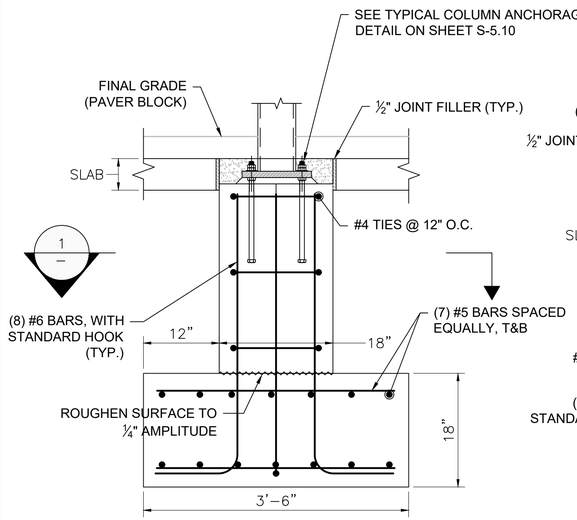

FOUNDATION TYPE F
SCALE: 1" = 1'–0"

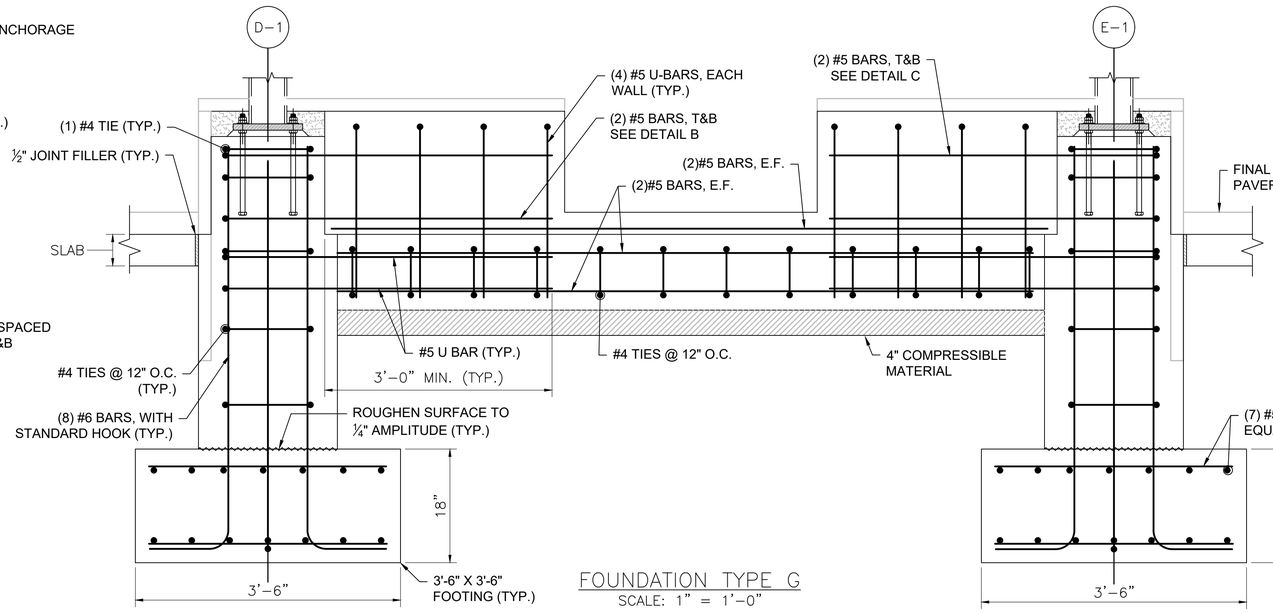

FOUNDATION TYPE G
SCALE: 1" = 1'–0"

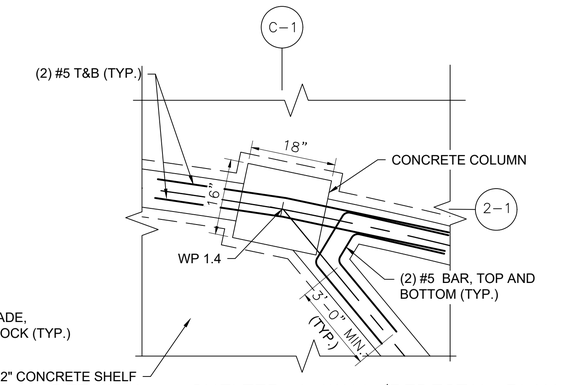

DETAIL A – SHELTER 1 WALL/PEDESTAL PLAN
SCALE: ¾" = 1'–0"

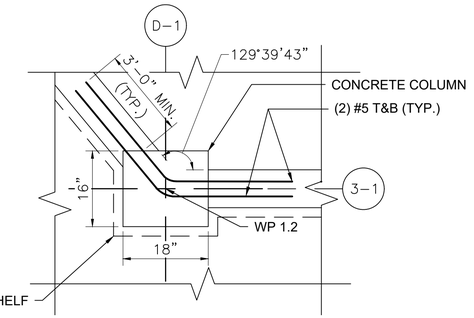

DETAIL B – SHELTER 1 WALL/PEDESTAL PLAN
SCALE: ¾" = 1'–0"

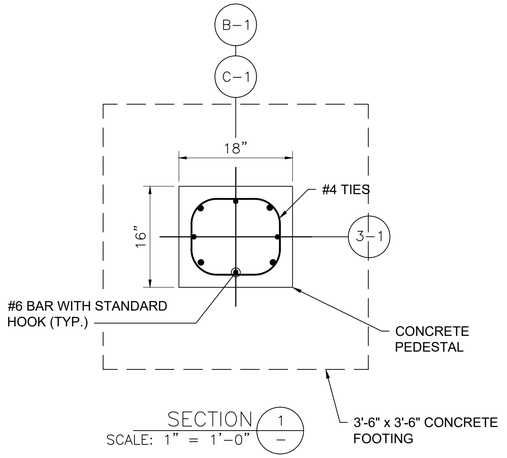

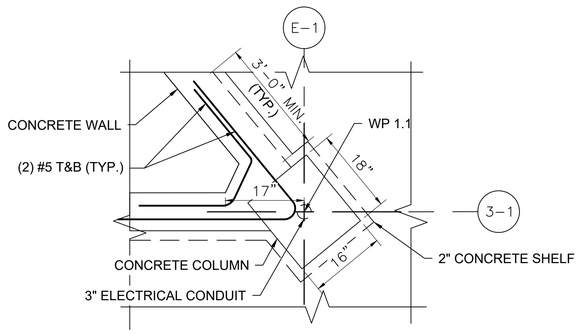

DETAIL C – SHELTER 1 WALL/PEDESTAL PLAN
SCALE: ¾" = 1'–0"

CONFORMED SET

HDR ENGINEERING, INC.
99 HIGH STREET, SUITE 2300
BOSTON, MASSACHUSETTS 02110–2378
(617) 357–7700

MARIO LOCOCO CIVIL ENGINEER NO. 52117 REGISTERED PROFESSIONAL ENGINEER
COMMONWEALTH OF MASSACHUSETTS
8/5/2022

Scale	AS SHOWN			
Date				
Job No.				
Designed by	LQ			
Drawn by	BF	0	CONFORMED SET	8/5/2022
Checked by	ML	No.	Description	Date
Approved by	JW	REVISIONS		

THE CAMBRIDGE DEPARTMENT OF PUBLIC WORKS

Client	CITY OF CAMBRIDGE, MA	Sheet	S-5.05
Project	RIVER STREET INFRASTRUCTURE AND STREETSCAPE PROJECT	Total Sheets	381
Drawing	**SHELTER 1 FOUNDATION DETAILS (2 OF 2)**	File No.	CNS

File: C:\PWWORKING\EAST01\D1817057\S-505 - SHELTER 1 FOUNDATION DETAILS (2 OF 2).DWG
Plotted: 8/15/2022 2:42:10 PM

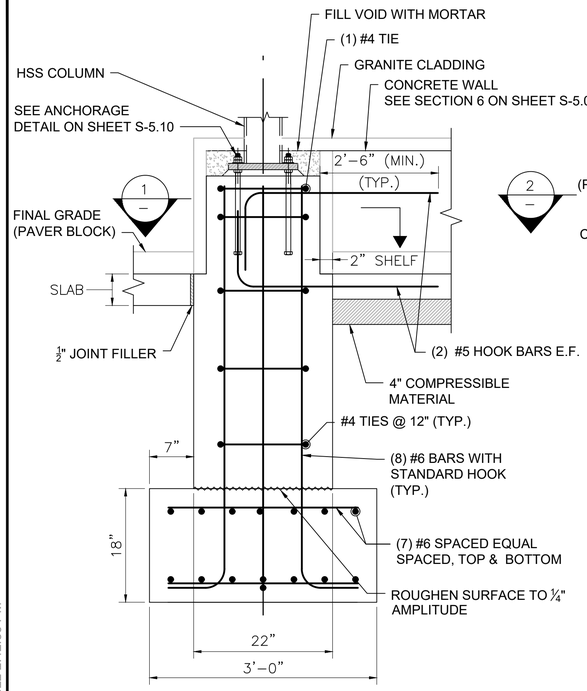

FOUNDATION TYPE H
SCALE: 1" = 1'-0"

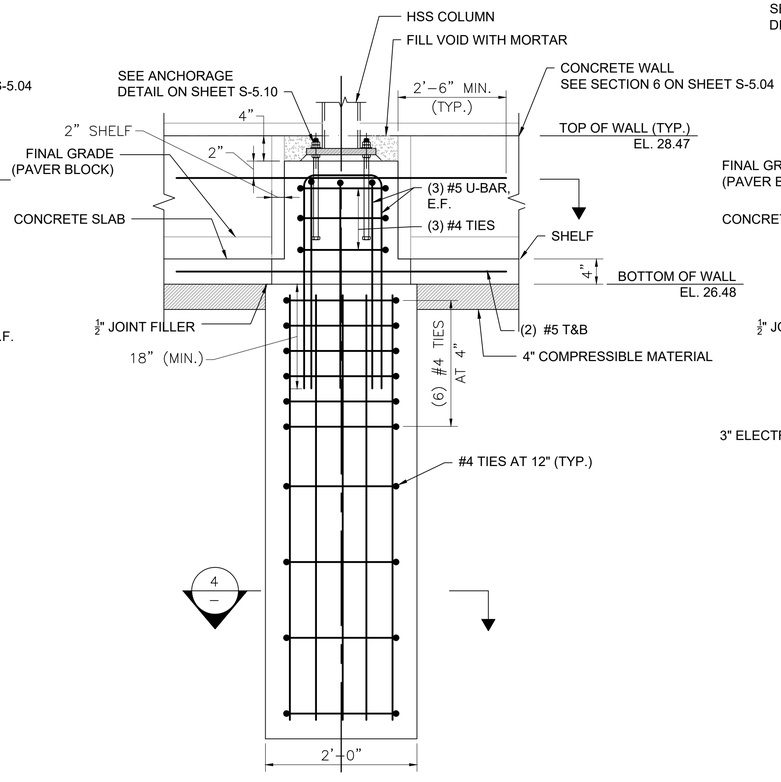

FOUNDATION TYPE K
SCALE: 1" = 1'-0"

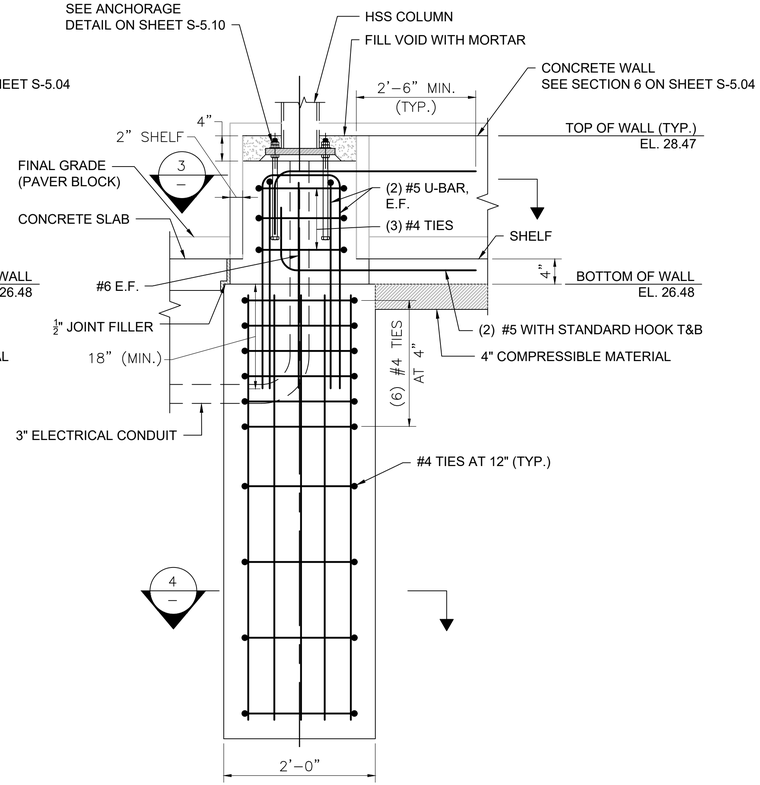

FOUNDATION TYPE J
SCALE: 1" = 1'-0"

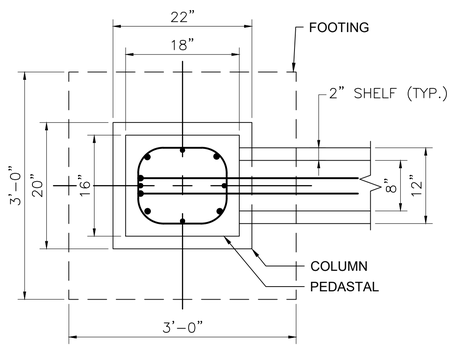

SECTION 1
SCALE: 1" = 1'-0"

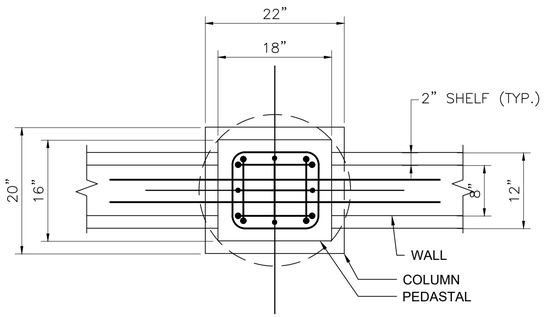

SECTION 2
SCALE: 1" = 1'-0"

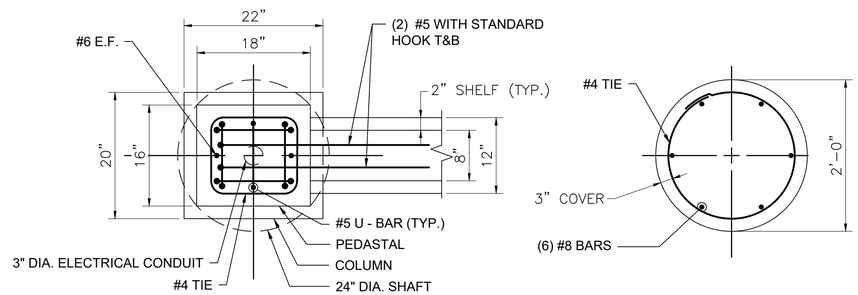

SECTION 3
SCALE: 1" = 1'-0"

SECTION 4
SCALE: 1" = 1'-0"

CONFORMED SET

HDR ENGINEERING, INC.
99 HIGH STREET, SUITE 2300
BOSTON, MASSACHUSETTS 02110-2378
(617) 357-7700

COMMONWEALTH OF MASSACHUSETTS
MARIO LOCOCO
CIVIL ENGINEER
NO. 53117
REGISTERED
PROFESSIONAL ENGINEER
8/5/2022

Scale	AS SHOWN			
Date				
Job No.				
Designed by	LQ			
Drawn by	BF	0	CONFORMED SET	8/5/2022
Checked by	ML	No.	Description	Date
Approved by	JW	REVISIONS		

THE CAMBRIDGE DEPARTMENT OF PUBLIC WORKS

Client	CITY OF CAMBRIDGE, MA	Sheet	S-5.06
Project	RIVER STREET INFRASTRUCTURE AND STREETSCAPE PROJECT	Total Sheets	381
Drawing	**SHELTER 2 FOUNDATION DETAILS**	File No.	CNS

File: C:\PWWORKINGEAST01\D1817057\S-506 - SHELTER 2 FOUNDATION DETAILS.DWG Plotted: 8/15/2022 2:42:36 PM

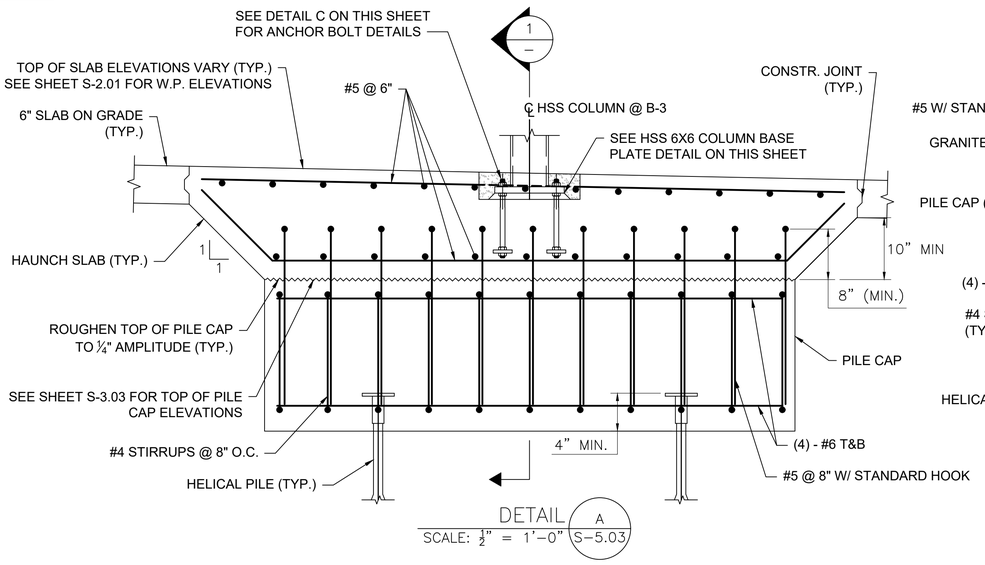

DETAIL A
SCALE: 1½" = 1'–0" S–5.03

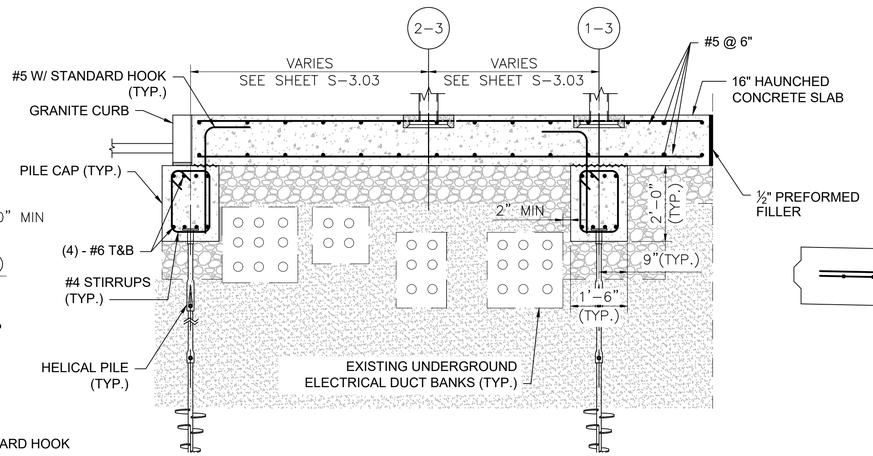

SECTION 1
SCALE: ½" = 1'–0"

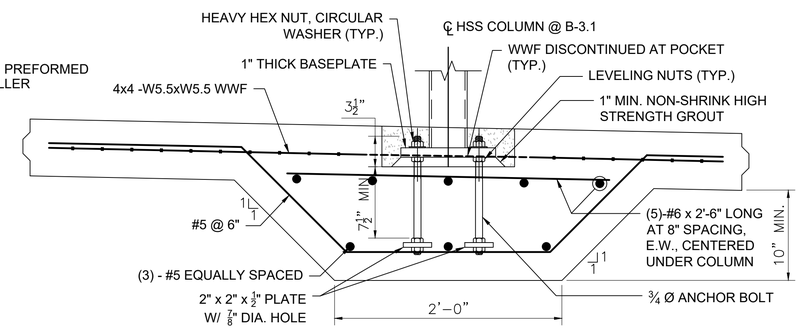

DETAIL B
SCALE: 1½" = 1'–0" S–5.03

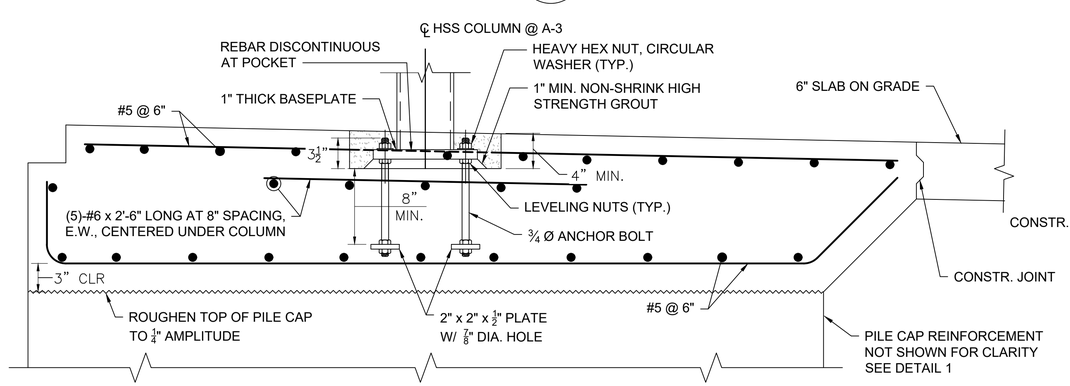

DETAIL C
SCALE: 1½" = 1'–0" S–5.03

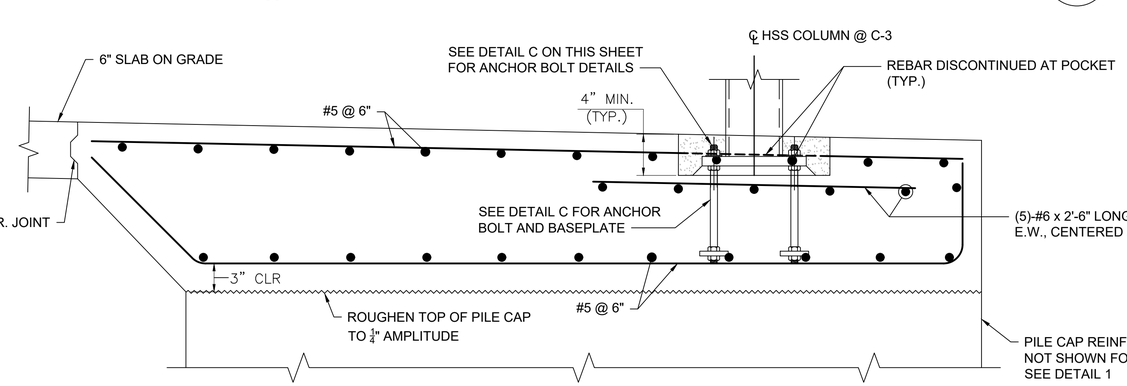

DETAIL D
SCALE: 1½" = 1'–0" S–5.03

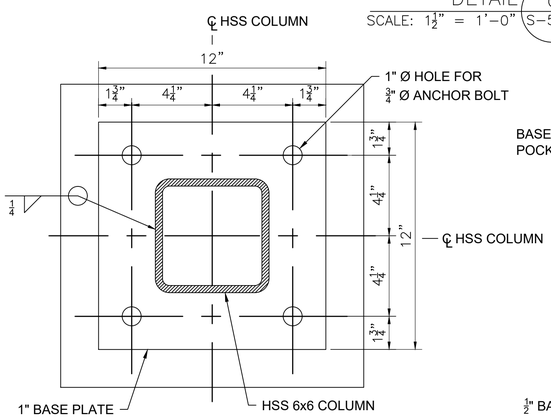

HSS 6x6 COLUMN BASE PLATE
SCALE: 3" = 1'–0"

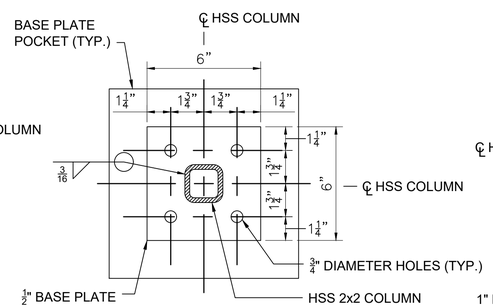

HSS 2x2 COLUMN BASE PLATE
SCALE: 3" = 1'–0"

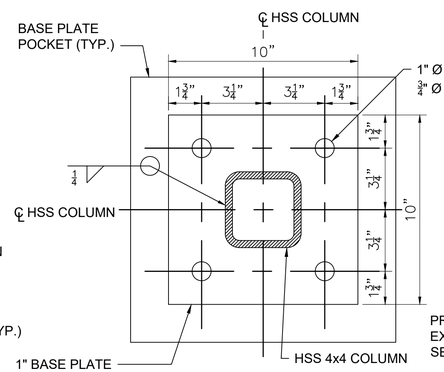

HSS 4x4 COLUMN BASE PLATE
SCALE: 3" = 1'–0"

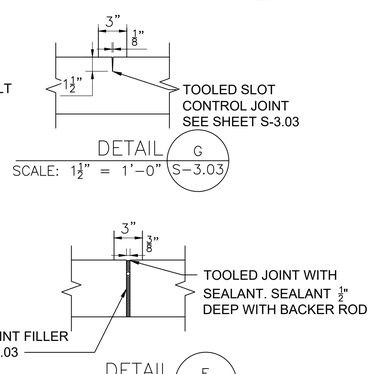

DETAIL G
SCALE: 1½" = 1'–0" S–3.03

DETAIL E
SCALE: 1½" = 1'–0" S–3.03

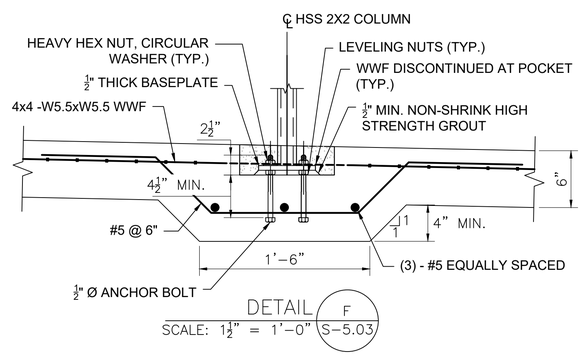

DETAIL F
SCALE: 1½" = 1'–0" S–5.03

NOTE: REINFORCEMENT TO BE DISCONTINUOUS THROUGH JOINT

CONFORMED SET

HDR ENGINEERING, INC.
99 HIGH STREET, SUITE 2300
BOSTON, MASSACHUSETTS 02110–2378
(617) 357–7700

COMMONWEALTH OF MASSACHUSETTS
MARIO LOCONTO
CIVIL ENGINEER
NO. 53117
REGISTERED PROFESSIONAL ENGINEER
8/5/2022

Scale	AS SHOWN			
Date				
Job No.				
Designed by	LQ			
Drawn by	BF	0	CONFORMED SET	8/5/2022
Checked by	ML	No.	Description	Date
Approved by	JW	REVISIONS		

THE WORKS — CAMBRIDGE DEPARTMENT OF PUBLIC WORKS

Client	CITY OF CAMBRIDGE, MA	Sheet	S-5.07
Project	RIVER STREET INFRASTRUCTURE AND STREETSCAPE PROJECT	Total Sheets	381
Drawing	**SHELTER 3 FOUNDATION DETAILS**	File No.	CNS

File: C:\P\WORKING\EAST01\D1817057\S-507 - SHELTER 3 FOUNDATION DETAILS.DWG Plotted: 8/15/2022 2:43:14 PM

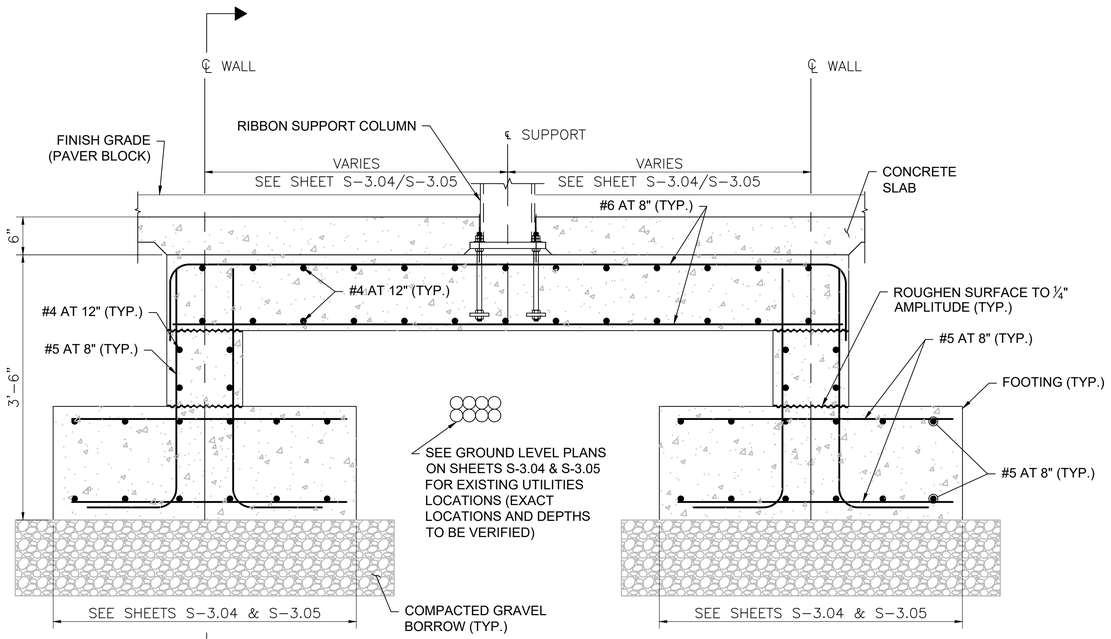

1 –

TYPICAL SECTION FOR RIBBON STRUCTURE FOUNDATIONS 4, 6 & 10

SCALE: 1" = 1'-0"

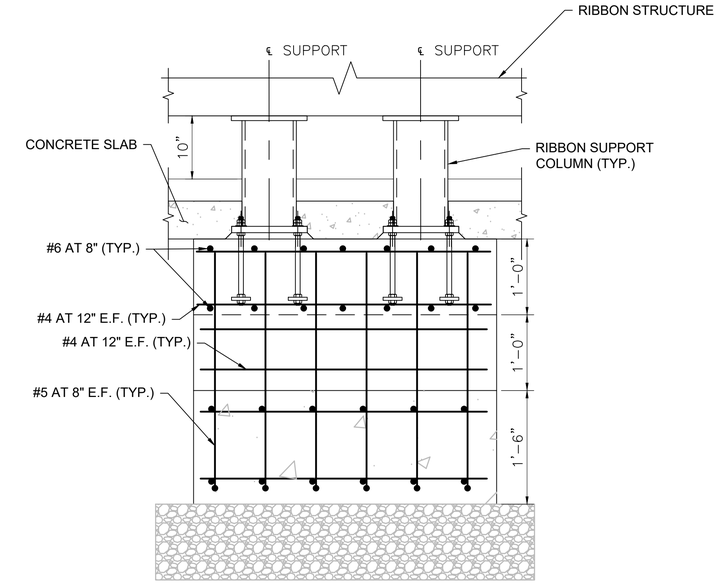

SECTION

SCALE: 1" = 1'-0"

1 –

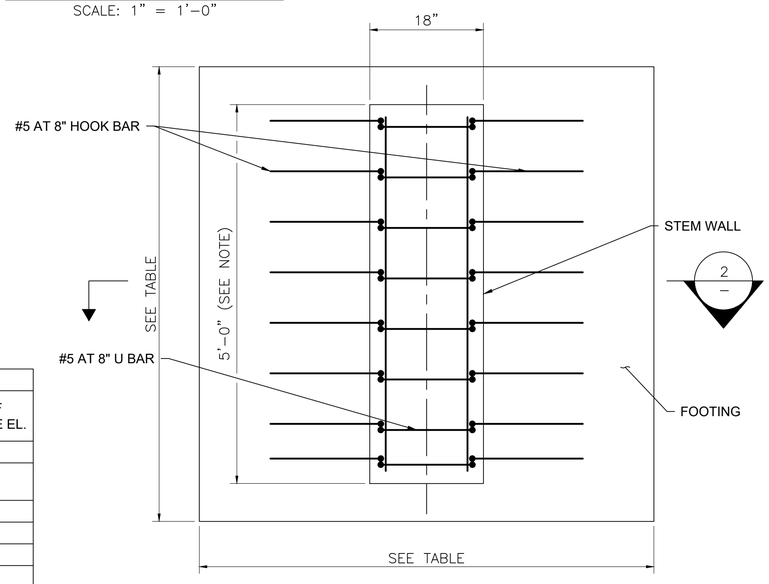

TYPICAL RIBBON SPREAD FOOTING

SCALE: 1" = 1'-0"

RIBBON FOUNDATION SCHEDULE		
FOUNDATION	FOOTING SIZE	TOP OF CONCRETE EL.
1	6'-0" X 6'-0"	26.93
2/3	13'-1" X 5'-0" (SEE NOTE BELOW)	26.57
4	SEE SHEET S-3.04	26.57
5	6'-0" X 6'-0"	26.57
6	SEE SHEET S-3.05	26.61
7	6'-0" X 6'-0"	26.58
8	7'-0" X 7'-0"	26.58
9	6'-0" X 6'-0"	26.58
10	SEE SHEET S-3.05	26.58

NOTE: SEE SHEET S-3.04 FOR FOUNDATION 2/3 STEM WALL CONFIGURATION

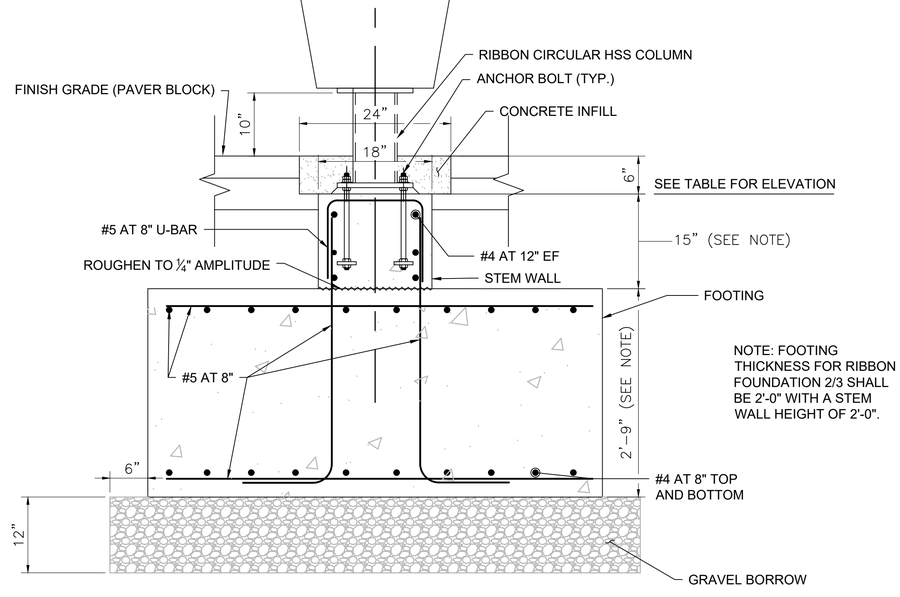

SECTION

SCALE: 1" = 1'-0"

2 –

CONFORMED SET

HDR ENGINEERING, INC.
99 HIGH STREET, SUITE 2300
BOSTON, MASSACHUSETTS 02110-2378
(617) 357-7700

MARIO LOCOCO CIVIL ENGINEER NO. 53117 REGISTERED PROFESSIONAL ENGINEER COMMONWEALTH OF MASSACHUSETTS
8/5/2022

Scale	AS SHOWN			
Date				
Job No.				
Designed by	TW			
Drawn by	TW	0	CONFORMED SET	8/5/2022
Checked by	ML	No.	Description	Date
Approved by	JW	REVISIONS		

THE WORKS — CAMBRIDGE DEPARTMENT OF PUBLIC

Client	CITY OF CAMBRIDGE, MA	Sheet	S-5.08
Project	RIVER STREET INFRASTRUCTURE AND STREETSCAPE PROJECT	Total Sheets	381
Drawing	**RIBBON STRUCTURE FOUNDATION DETAILS**	File No.	CNS

Plotted: 8/15/2022 2:43:34 PM
File: C:\PW\WORKINGEAST01\D1817057\S-508 - RIBBON STRUCTURE FOUNDATION DETAILS.DWG

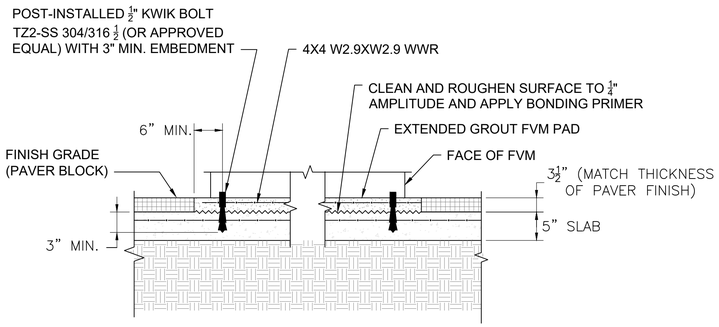

FVM FOUNDATION DETAIL

SCALE: ¾" = 1'–0"

NOTES:

1. CONTRACTOR TO COORDINATE TOTAL LENGTH OF ANCHOR AND PROJECTION OF ANCHOR ABOVE STRUCTURAL CONCRETE SURFACE.
2. POST–INSTALLED ANCHORS MUST CONFORM WITH ALL REQUIREMENTS OF ACI 318–14–BUILDING CODE REQUIREMENTS OF STRUCTURAL CONCRETE.
3. THE CONTRACTOR IS RESPONSIBLE FOR COORDINATING ANCHOR LOCATIONS, AS REQUIRED.
4. SUBSTITUTION REQUESTS FOR ALTERNATE PRODUCTS MUST BE APPROVED IN WRITING BY THE STRUCTURAL ENGINEER OF RECORD.
5. INSTALL ANCHORS PER THE MANUFACTURERS INSTRUCTIONS, AS INCLUDED IN THE ANCHOR PACKAGING.
6. PIPES, CONDUITS, ETC MUST NOT BE EMBEDDED IN CAST IN PLACE CONCRETE UNLESS SPECIFICALLY NOTED ON THE STRUCTURAL DRAWINGS.
7. EXTENDED GROUT MUST BE SIKATOP 122 PLUS (POLYMER–MODIFIED CEMENTITIOUS MORTAR) WITH ⅜" AGGREGATE. SUBSTITUTIONS FOR PRODUCTS DEEMED TO BE OF EQUAL QUALITY MAY BE CONSIDERED UPON WRITTEN APPROVAL BY THE STRUCTURAL ENGINEER OF RECORD.

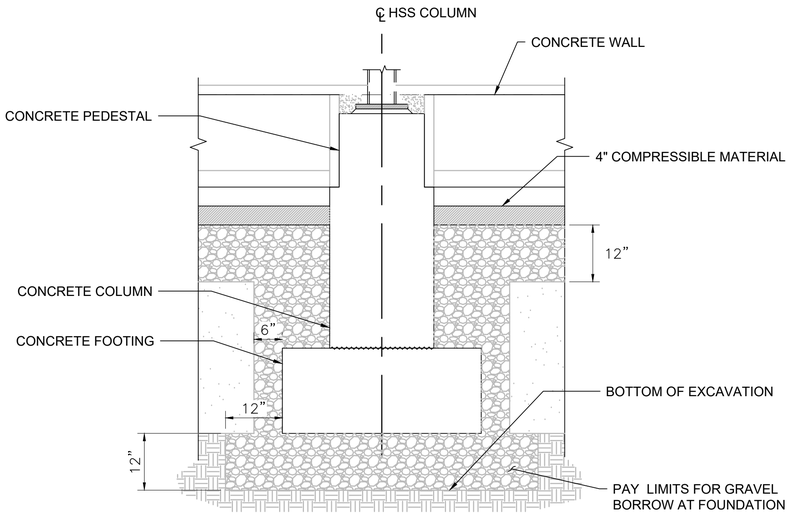

LIMIT OF STRUCTURAL BACKFILL FOR FOOTINGS

SCALE: ¾" = 1'–0"

CONFORMED SET

HDR ENGINEERING, INC.
99 HIGH STREET, SUITE 2300
BOSTON, MASSACHUSETTS 02110–2378
(617) 357–7700

MARIO LOCOCO CIVIL ENGINEER NO. 53117 COMMONWEALTH OF MASSACHUSETTS REGISTERED PROFESSIONAL ENGINEER
6/5/2022

Scale	AS SHOWN			
Date				
Job No.				
Designed by	LQ			
Drawn by	BF	0	CONFORMED SET	8/5/2022
Checked by	ML	No.	Description	Date
Approved by	JW	REVISIONS		

THE CAMBRIDGE DEPARTMENT OF PUBLIC WORKS

Client: CITY OF CAMBRIDGE, MA

Project: RIVER STREET INFRASTRUCTURE AND STREETSCAPE PROJECT

Drawing: **MISCELLANEOUS FOUNDATION DETAILS**

Sheet: S-5.09

Total Sheets: 381

File No.: CNS

File: C:\PW\WORKING\EAST01\D1817057\S-509 - MISCELLANEOUS FOUNDATION DETAILS.DWG Plotted: 8/15/2022 2:43:48 PM

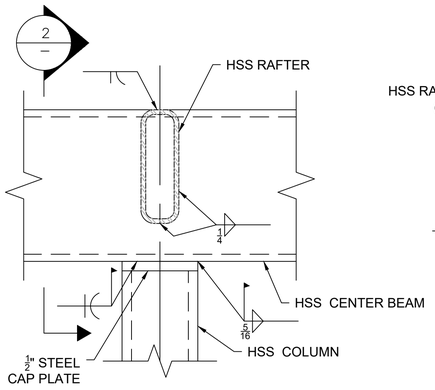

SECTION 1 — SCALE: 3" = 1'-0" — S-4.01

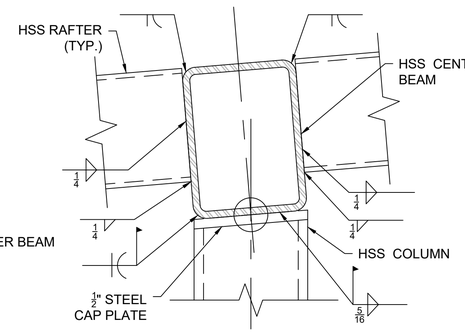

SECTION 2 — SCALE: 3" = 1'-0" — –

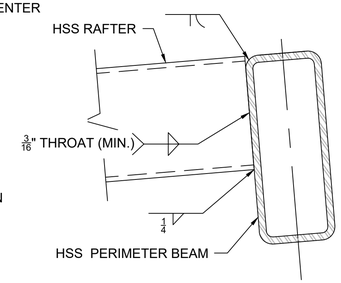

SECTION 3 — SCALE: 3" = 1'-0" — S-4.01

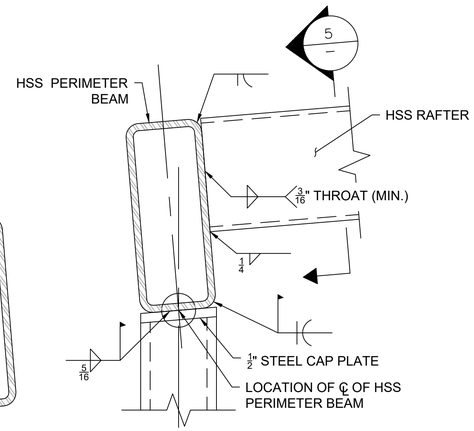

SECTION 4 — SCALE: 3" = 1'-0" — S-4.01

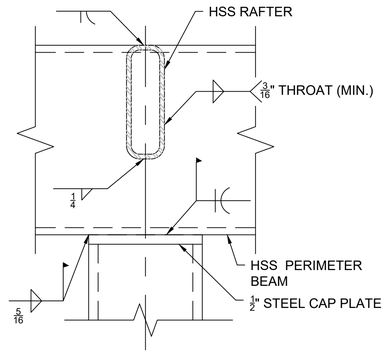

SECTION 5 — SCALE: 3" = 1'-0" — –

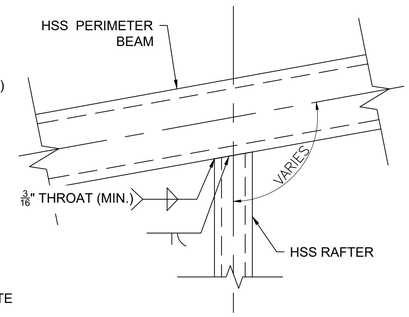

DETAIL B — SCALE: 3" = 1'-0" — S-4.01

DETAIL C — SCALE: 3" = 1'-0" — S-4.02

SECTION 6 — SALE: 3" = 1'-0" — –

SECTION 7 — SCALE: 3" = 1'-0" — –

DETAIL D — SCALE: 3" = 1'-0" — S-4.01

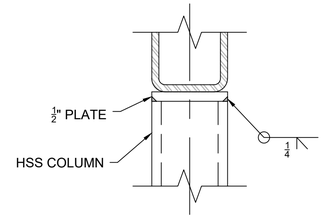

TYP. COLUMN CAP PLATE DETAIL — SCALE: 3" = 1'-0"

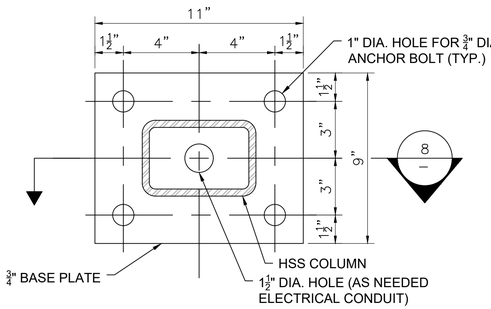

TYP. BASE PLATE — SCALE: 3" = 1'-0"

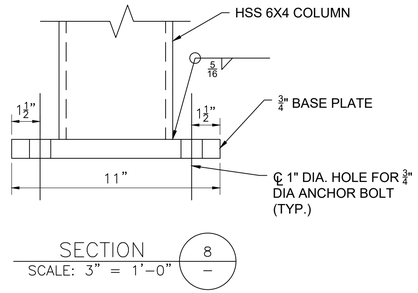

SECTION 8 — SCALE: 3" = 1'-0" — –

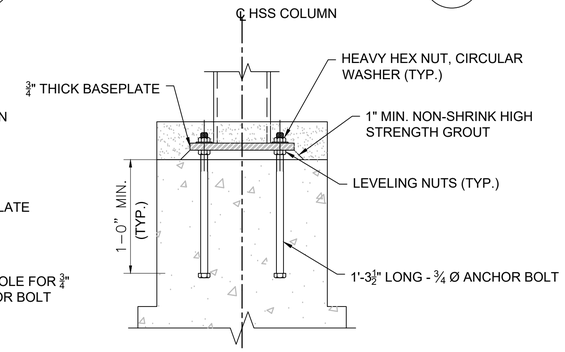

TYP. COLUMN ANCHORAGE — SCALE: 3" = 1'-0"

NOTES:

1. SEE FRAMING PLAN FOR SPLICE LOCATIONS.

CONFORMED SET

HDR ENGINEERING, INC.
99 HIGH STREET, SUITE 2300
BOSTON, MASSACHUSETTS 02110-2378
(617) 357-7700

COMMONWEALTH OF MASSACHUSETTS — MARIO LOCOCO — CIVIL ENGINEER — NO. 53117 — REGISTERED PROFESSIONAL ENGINEER — 8/5/2022

Scale	AS SHOWN			
Date				
Job No.				
Designed by	TW			
Drawn by	TW	0	CONFORMED SET	8/5/2022
Checked by	ML	No.	Description	Date
Approved by	JW	REVISIONS		

THE WORKS — CAMBRIDGE DEPARTMENT OF PUBLIC WORKS

Client	CITY OF CAMBRIDGE, MA	Sheet	S-5.10
Project	RIVER STREET INFRASTRUCTURE AND STREETSCAPE PROJECT	Total Sheets	381
Drawing	**STRUCTURAL STEEL DETAILS (1 OF 3)**	File No.	CNS

File: C:\PW\WORKINGEAST01\D1817057\S-510 - STRUCTURAL DETAILS.DWG Plotted: 8/15/2022 2:43:55 PM

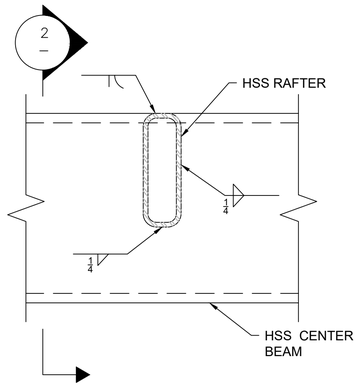

SECTION 1 — SCALE: 3" = 1'-0" — S-4.02

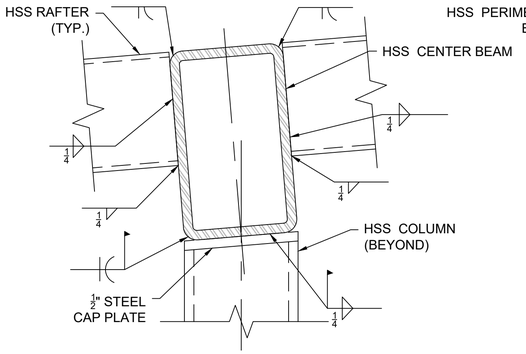

SECTION 2 — SCALE: 3" = 1'-0" — –

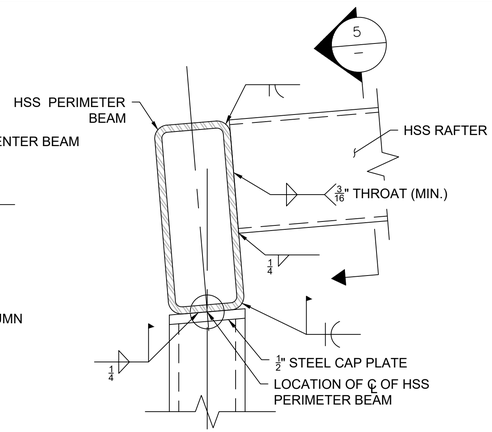

SECTION 4 — SCALE: 3" = 1'-0" — S-4.02

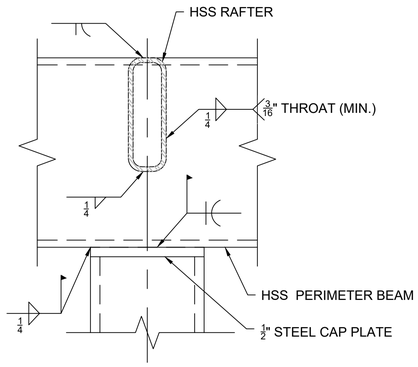

SECTION 5 — SCALE: 3" = 1'-0" — –

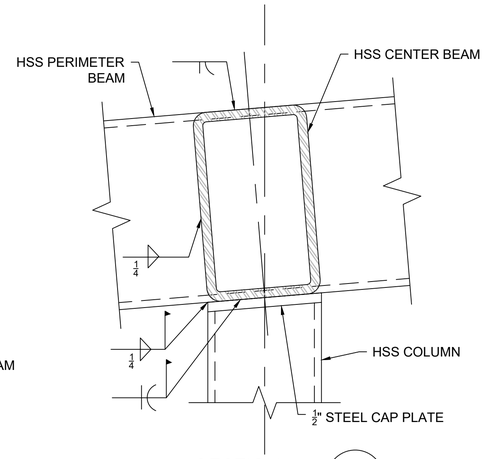

SECTION 6 — SALE: 3" = 1'-0" — S-4.02

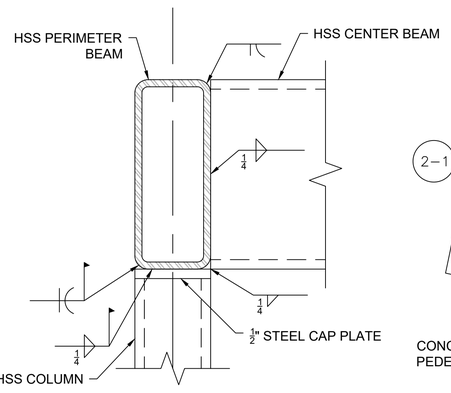

SECTION 7 — SCALE: 3" = 1'-0" — S-4.02

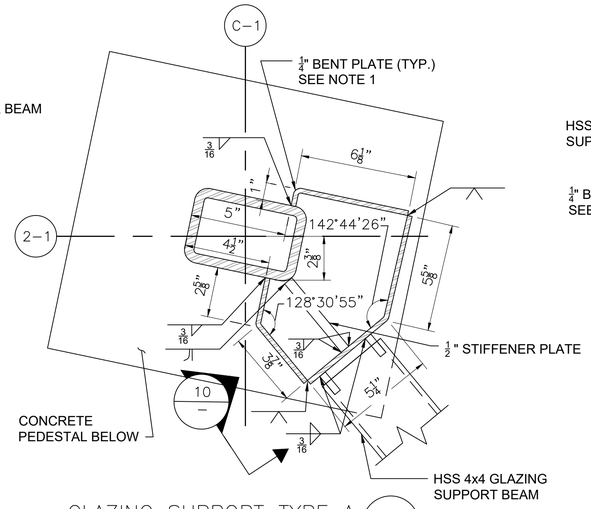

GLAZING SUPPORT TYPE A — SCALE: 3" = 1'-0" — A — S-4.01

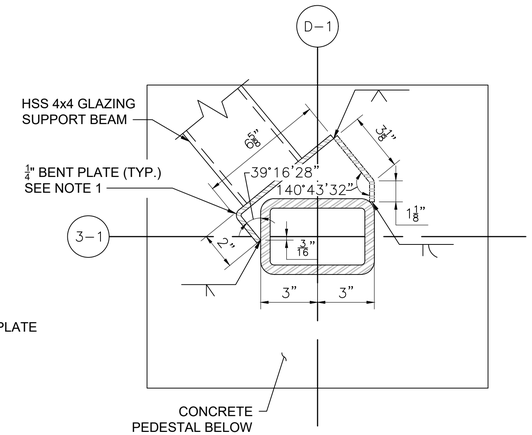

GLAZING SUPPORT TYPE B — SCALE: 3" = 1'-0" — B — S-4.01

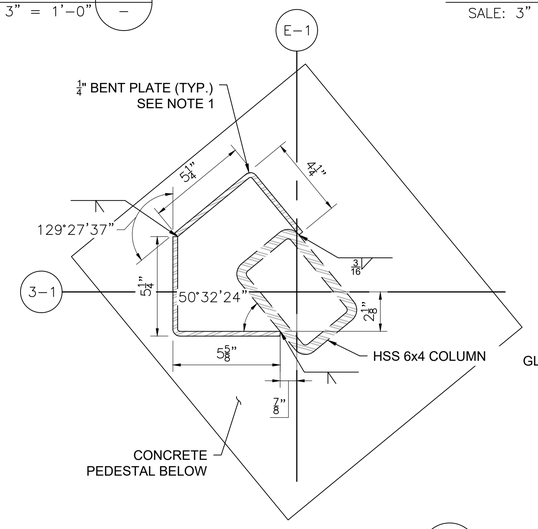

GLAZING SUPPORT TYPE C — SCALE: 3" = 1'-0" — C — S-4.01

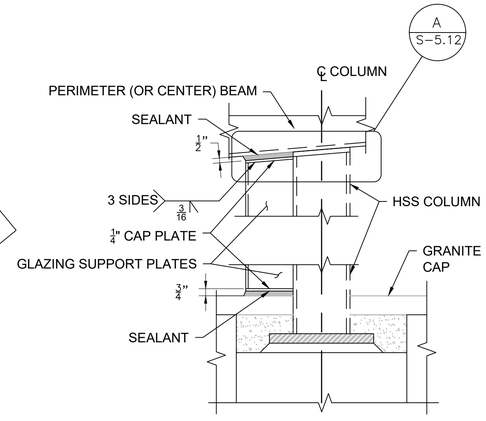

TYPICAL GLAZING SUPPORT SYSTEM TERMINATION DETAIL — SCALE: 1½" = 1'-0"

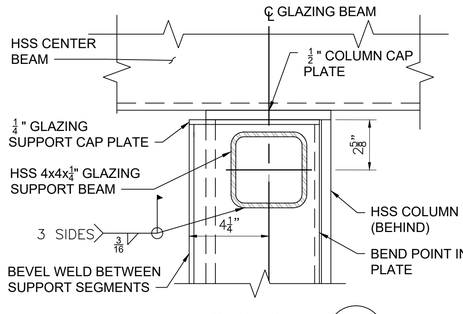

SECTION 8 — SCALE: 3" = 1'-0" — S-4.01

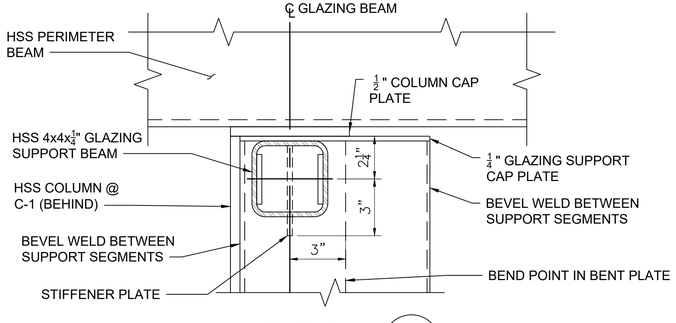

SECTION 9 — SCALE: 3" = 1'-0" — S-4.01

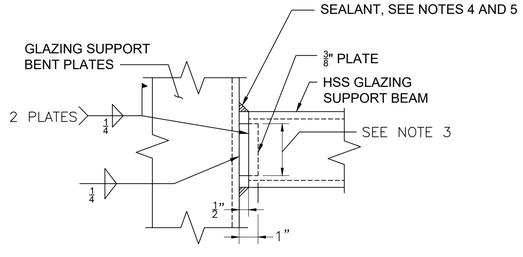

SECTION 10 — SCALE: 3" = 1'-0" — –

NOTES:
1. ALL BENDS ARE 90° UNLESS OTHERWISE SPECIFIED.
2. HSS 4X4X¼" GLAZING SUPPORT BEAM TO BE ERECTED AND TEMPORARILY SUPPORTED PRIOR TO INSTALLATION OF COLUMNS.
3. PLATE DIMENSION TO MATCH INSIDE FLAT OF GLAZING SUPPORT BEAM
4. SEALANT APPLIED AFTER WELDS HAVE RETURNED TO AMBIENT TEMPERATURE.
5. SEALANT COLOR TO MATCH FINISH COLOR OF SHELTER.

CONFORMED SET

HDR ENGINEERING, INC.
99 HIGH STREET, SUITE 2300
BOSTON, MASSACHUSETTS 02110-2378
(617) 357-7700

MARIO LOCOCO — COMMONWEALTH OF MASSACHUSETTS — CIVIL ENGINEER NO. 53117 — REGISTERED PROFESSIONAL ENGINEER
8/5/2022

Scale	AS SHOWN			
Date				
Job No.				
Designed by	TW			
Drawn by	TW	0	CONFORMED SET	8/5/2022
Checked by	ML	No.	Description	Date
Approved by	JW	REVISIONS		

THE WORKS — CAMBRIDGE DEPARTMENT OF PUBLIC WORKS

Client	CITY OF CAMBRIDGE, MA
Project	RIVER STREET INFRASTRUCTURE AND STREETSCAPE PROJECT
Drawing	**STRUCTURAL STEEL DETAILS (2 OF 3)**
Sheet	S-5.11
Total Sheets	381
File No.	CNS

File: C:\PW\WORKING\EAST01\D1817057\S-510 - STRUCTURAL DETAILS.DWG Plotted: 8/15/2022 2:43:58 PM

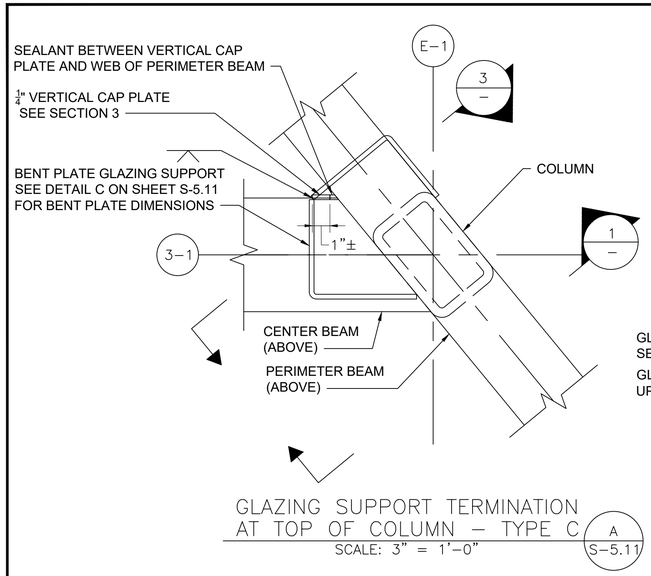

GLAZING SUPPORT TERMINATION AT TOP OF COLUMN – TYPE C (A / S–5.11)
SCALE: 3" = 1'–0"

NOTE: TYPE C SHOWN, TYPES A & B ARE SIMILAR

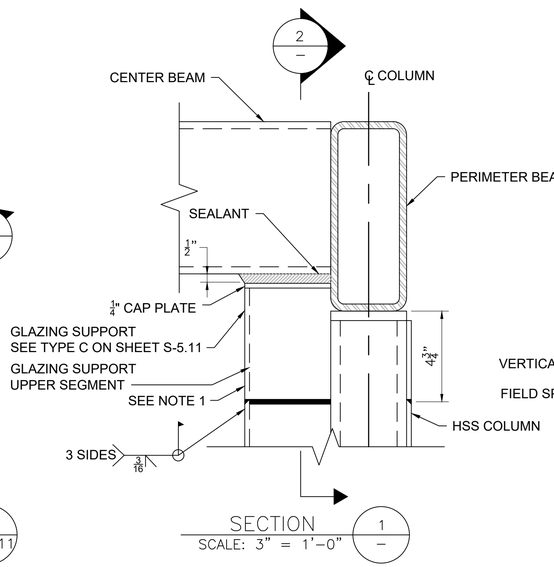

SECTION 1 / SCALE: 3" = 1'–0"

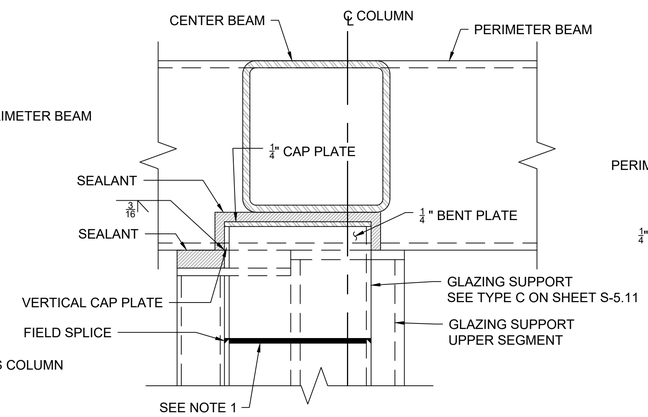

SECTION 2 / SCALE: 3" = 1'–0"

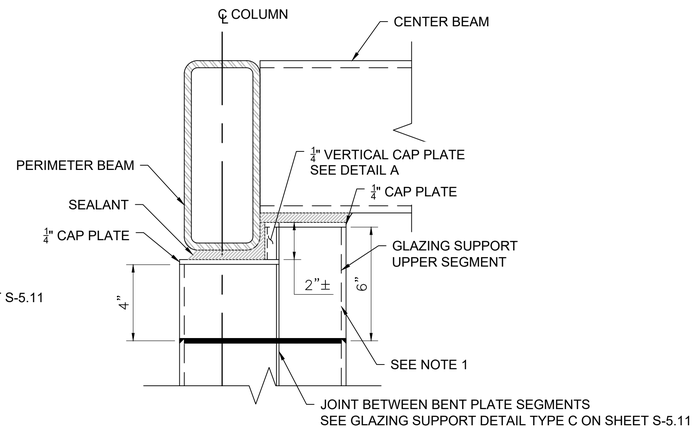

SECTION 3 / SCALE: 3" = 1'–0"

NOTE:
1. GLAZING SUPORT UPPER SEGMENT TO BE WELDED AFTER COLUMN TO BEAM FIELD WELD

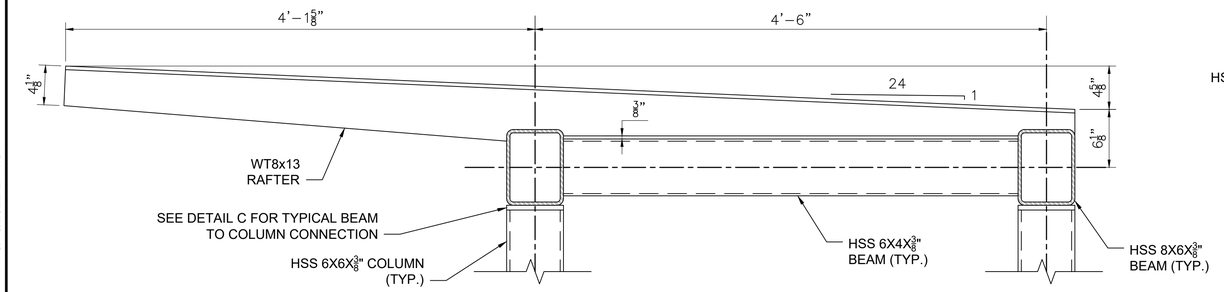

RAFTER AT COLUMN LINE A–3/C–3 (4 / S–5.03)
SCALE: 1½" = 1'–0"

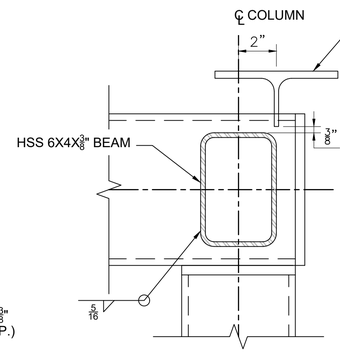

DETAIL B / SCALE: 3" = 1'–0" (S–5.03)

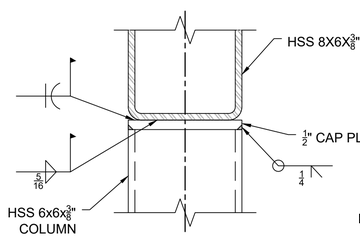

DETAIL C / SCALE: 3" = 1'–0"

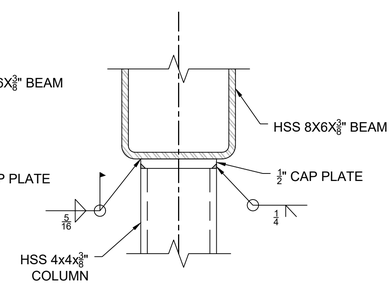

DETAIL X2 / SCALE: 3" = 1'–0" (S–5.03)

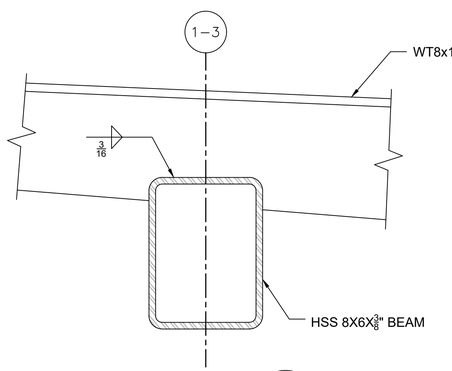

DETAIL E / SCALE: 3" = 1'–0" (S–5.03)

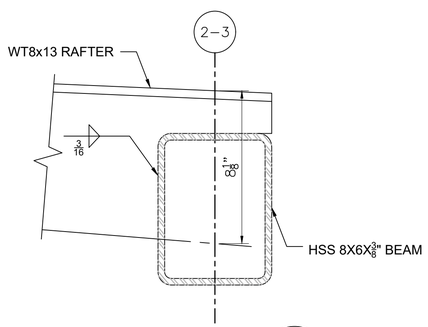

DETAIL F / SCALE: 3" = 1'–0" (S–5.03)

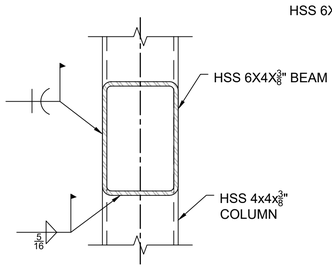

SECTION 5 / SCALE: 3" = 1'–0" (S–5.03)

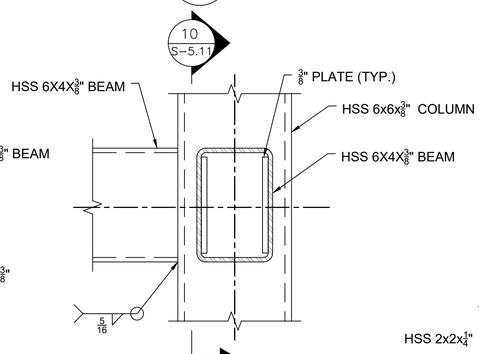

DETAIL G / SCALE: 3" = 1'–0" (S–5.03)

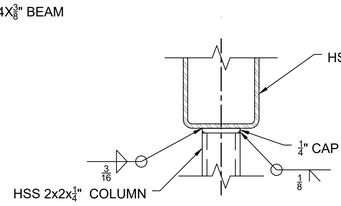

DETAIL X1 / SCALE: 3" = 1'–0" (S–5.03)

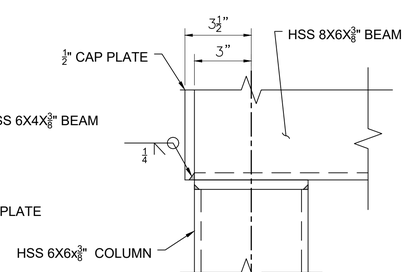

BEAM END CAP DETAIL
SCALE: 3" = 1'–0"

CONFORMED SET

HDR ENGINEERING, INC.
99 HIGH STREET, SUITE 2300
BOSTON, MASSACHUSETTS 02110–2378
(617) 357–7700

COMMONWEALTH OF MASSACHUSETTS — MARIO LOCOCO — CIVIL ENGINEER — NO. 53117 — REGISTERED PROFESSIONAL ENGINEER
8/5/2022

Scale	AS SHOWN			
Date				
Job No.				
Designed by	TW			
Drawn by	TW	0	CONFORMED SET	8/5/2022
Checked by	ML	No.	Description	Date
Approved by	JW	REVISIONS		

THE WORKS — CAMBRIDGE DEPARTMENT OF PUBLIC WORKS

Client	CITY OF CAMBRIDGE, MA	Sheet	S-5.12
Project	RIVER STREET INFRASTRUCTURE AND STREETSCAPE PROJECT	Total Sheets	381
Drawing	**STRUCTURAL STEEL DETAILS (3 OF 3)**	File No.	CNS

File: C:\PW\WORKING\EAST01\D1817057\S-510 - STRUCTURAL DETAILS.DWG Plotted: 8/15/2022 2:44:01 PM

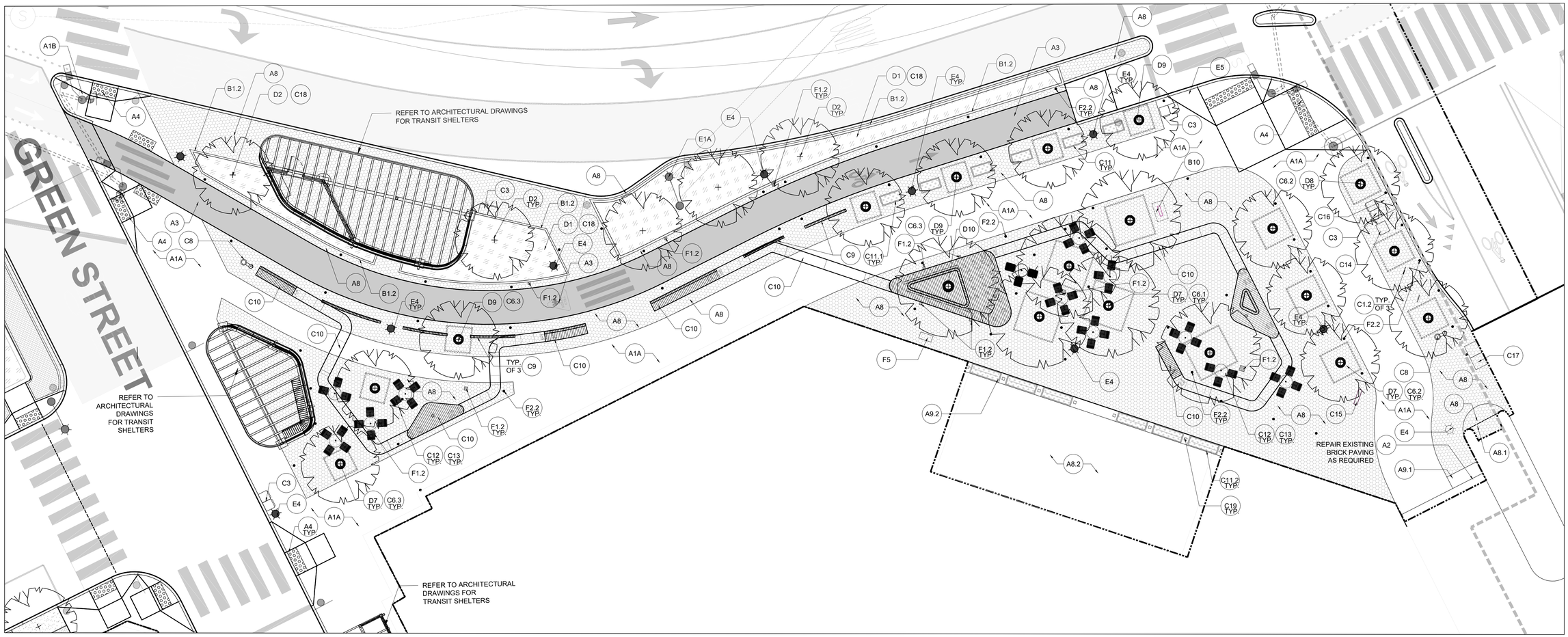

MATERIALS LEGEND

SYM	TAG	DESCRIPTION	DETAIL
		PAVING	
	A1	A. 4-INCH CEMENT CONCRETE SIDEWALKS: SEE CIVIL DRAWINGS FOR DETAILS B. 6-INCH CEMENT CONCRETE SIDEWALKS : SEE CIVIL DRAWINGS FOR DETAILS	1/L3.01
	A2	BRICK PAVING ON ASPHALT BASE	2/L3.01
	A3	CYCLE TRACK- PERVIOUS OR NON-PERVIOUS - REFER TO CIVIL DRAWINGS FOR LOCATIONS AND DETAILS	
	A4	ACCESSIBLE CURB RAMP W/ DETECTABLE WARNING STRIP- REFER TO CIVIL DRAWINGS	
	A8	PRECAST UNIT PAVERS ON CONCRETE BASE	6-9/L5.50, 1/L5.50
	A8.1	PRECAST UNIT PAVERS ON EXISTING CONCRETE BASE	2/L5.50
	A8.2	PRECAST UNIT PAVERS - ON STRUCTURE	4/L5.50
	A9.1	FLUSH GRANITE PAVING BAND -CB PLAZA	3/L5.50
	A9.2	FLUSH GRANITE PAVING BAND -CB PLAZA - ON STRUCTURE	5/L5.50
		CURBING AND WALLS	
	B1.2	GRANITE PLANTER CURB - PLAZA	9/L3.01
	B10	CARL BARRON MEMORIAL SIGN	1/L5.51, 2/L5.51
		SITE FURNISHINGS	
	C1.2	BIKE RACK - TYPE 2	1/L3.03
	C3	TRASH AND RECYCLING RECEPTACLE	3/L3.03
	C6.1	PAVER TREE GRATE - 8'	1/L3.04
	C6.2	PAVER TREE GRATE - 6'	2/L3.04
	C6.3	PAVER TREE GRATE - 5'	3/L3.04
	C8	WATER FILL STATION	4/L3.03
	C9	SEPARATOR - REFER TO CIVIL/STRUCTURAL DWGS	4/L5.51
	C10	SCULPTURAL RIBBON - REFER TO STRUCTURAL AND ELECTRICAL DRAWINGS	
	C11.1	PLANTER - FREE STANDING- TYPE 1	4/L5.53
	C11.2	PLANTER - FREE STANDING- TYPE 2	4/L5.53
	C12	CHAIRS	6/L5.51
	C13	TABLES	5/L5.51
	C14	NEEDLE BIN - FURNISHED AND INSTALLED BY OTHERS	
	C15	FUTURE KIOSK - FURNISHED AND INSTALLED BY CITY. PROVIDE FOUNDATION AND ELEC CONNECTIONS ONLY - REFER TO STRUCTURAL AND ELEC DRAWINGS	
	C16	SAND BIN - FURNISHED AND INSTALLED BY OTHERS	
	C17	MAIL BOX	
	C18	RODENT CONTROL GEOTEXTILE	1,2,3-L3.05, 5,8-L3.05
	C19	BOLLARD OVER STRUCTURE	9/L5.51
		PLANTING	
	D1	PLANTING BED	2/L3.05, 9/L3.05
	D5	TREE PLANTING	7/L3.05, 3/L5.53
	D7	TREE PLANTING - IN PRECAST UNIT PAVERS	1/L5.52
	D8	TREE PLANTING - IN PRECAST UNIT PAVERS - CURB CONDITION	1/L5.53
	D9	TREE PLANTING - IN PRECAST UNIT PAVERS - AT SEPERATED BIKE LANE	2/L5.53, 3/L5.53
	D10	TREE PLANTING IN PLATFORM SEATING	2/L5.53
		LIGHTING - REFER TO ELECTRICAL AND STRUCTURAL DRAWINGS	
	E1A	LIGHT POLE - TYPE 1A - DECORATIVE PENDANT LIGHTING FIXTURE SINGLE POLE MOUNTED- REFER TO ELEC DRAWINGS	
	E4	LIGHT POLE TYPE 2B.1 OR 2B.2 - LED SELUX PEDESTRIAN LIGHT FIXTURE -REFER TO ELEC DRAWINGS	
	E5	LIGHT POLE TYPE 1M - HIGH MASTEXISTING LUMINAIRE	
		DRAINAGE AND UTILITIES	
	F1.2	DRAIN INLET - REFER TO CIVIL DWGS	
	F2.2	AERATION GRATE TYPE 2	7/L5.51
	F5	LIGHTING LOAD CENTER- REFER TO ELECTRICAL DRAWINGS	

ISSUED FOR BID

HDR ENGINEERING, INC.
99 HIGH STREET, SUITE 2300
BOSTON, MASSACHUSETTS 02110–2378
(617) 357–7700

HALVORSON Tighe&Bond STUDIO
25 KINGSTON ST, BOSTON MA 02111-2200
(PHONE) 617.536.0380
WWW.HALVORSONDESIGN.COM

MASSACHUSETTS ROBERT URLIG No. 984 REGISTERED LANDSCAPE ARCHITECT
04/18/2022

Scale			
Date			
Job No.			
Designed by			
Drawn by			
Checked by	No.	Description	Date
Approved by		REVISIONS	

CAMBRIDGE DEPARTMENT OF PUBLIC WORKS

Client: CITY OF CAMBRIDGE, MA	Sheet: L-5.00
Project: RIVER STREET INFRASTRUCTURE AND STREETSCAPE PROJECT	Total Sheets: 381
Drawing: **CARL BARRON PLAZA MATERIALS PLAN**	File No.

File: C:\PWWORKING\EAST\D1\D1174456\T113XXX_LA(DESIGN)_L-5.00 CARL BARRON MATERIALS PLAN.DWG Plotted: 4/17/2022 8:18:02 AM

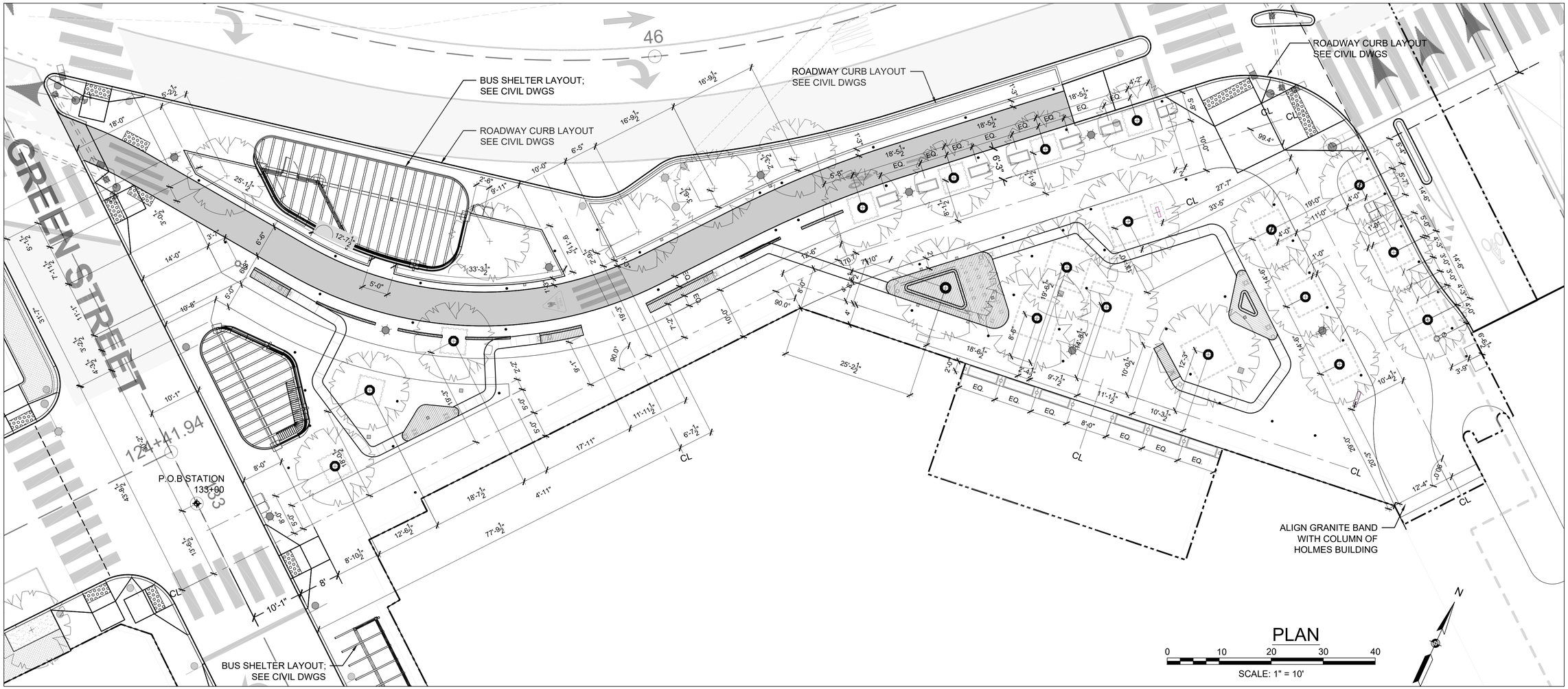

ORIGIN POINT
CP CENTER POINT
CL CENTER LINE
PT POINT OF TANGENCY
ALIGN
LAYOUT LINE

1. EXISTING CONDITIONS BASED UPON FIELD SURVEY PROVIDED BY FELDMAN LAND SURVEYORS, BOSTON, MASSACHUSETTS.
2. EMPLOY LICENSED SURVEYOR OR REGISTERED CIVIL ENGINEER TO VERIFY AND LAYOUT GRADES, LINES AND DIMENSIONS. REPORT DISCREPANCIES TO OWNER'S REPRESENTATIVE PRIOR TO COMMENCING WORK.
2. LINES ARE PARALLEL OR PERPENDICULAR TO LINES FROM WHICH THEY ARE MEASURED, UNLESS OTHERWISE NOTED.
3. DIMENSIONS ARE TO WALL FACE, CURB FACE, PAVEMENT EDGE, EDGE OR CENTERLINE OF IMPROVEMENT OR AS OTHERWISE NOTED.
4. SET TOP SURFACE OF TREE GRATES FLUSH WITH FINISH GRADE OF ADJACENT PAVING. PROVIDE A SMOOTH TRANSITION AND POSITIVE DRAINAGE BETWEEN GRATE AND PAVING. NOTIFY LANDSCAPE ARCHITECT WHERE GRADE DIFFERENCE IS GREATER THAN 1/4" BETWEEN ELEMENTS AND WHERE SLOPE IS GREATER THAN 2%.
5. TREE GRATES SHALL BE BE PARALLEL WITH CURB FACE
6. CONTRACTOR TO NOTIFY LANDSCAPE ARCHITECT OF ANY CONFLICTS WITH EXISTING SITE AMENITIES, FURNISHINGS, UTILITIES, OR ANY OTHER SITE ELEMENT NOT RECORDED ON THESE PLANS.
8. PROVIDE CONTINUOUS CONSTRUCTION JOINT WHEREVER EXTERIOR CONCRETE PAVING ABUTS BUILDING, CURBS, WALLS AND OTHER SITE IMPROVEMENTS.
9. REFER TO PLANTING AND SUBSURFACE CONDITIONS PLAN FOR DRAIN BASIN AND AERATION LAYOUT INFORMATION.
10. SEE PAVING PLAN FOR PAVING LAYOUT INFORMATION.
11. LOCATIONS/ORIENTATION OF ALL DRAINS, ELECTRICAL BOXES, AND IRRIGATION BOXES MUST BE REVIEW AND APPROVED IN THE FIELD.
12. CONTRACTOR TO STATE LOCATIONS OF SEATING STONES IN THE FIELD FOR LANDSCAPE ARCHITECT TO REVIEW AND APPROVE FINAL LOCATIONS.
13. SEE CIVIL DWGS FOR ROADWAY CURB AND SEPARATED BIKE LANE LAYOUT.

ISSUED FOR BID

HDR ENGINEERING, INC.
99 HIGH STREET, SUITE 2300
BOSTON, MASSACHUSETTS 02110-2378
(617) 357-7700

MASSACHUSETTS ROBERT URLIG No. 981 REGISTERED LANDSCAPE ARCHITECT
04/18/2022

Scale			
Date			
Job No.			
Designed by			
Drawn by			
Checked by	No.	Description	Date
Approved by	REVISIONS		

CAMBRIDGE DEPARTMENT OF PUBLIC WORKS

Client: CITY OF CAMBRIDGE, MA	Sheet: L-5.10
Project: RIVER STREET INFRASTRUCTURE AND STREETSCAPE PROJECT	Total Sheets: 381
Drawing: **CARL BARRON PLAZA LAYOUT PLAN**	File No.

File: C:\PWWORKING\EAST01\D1174456\7113XXX_LA(DESIGN)_L-5.10 CARL BARRON LAYOUT PLAN.DWG Plotted: 4/17/2022 7:59:20 AM

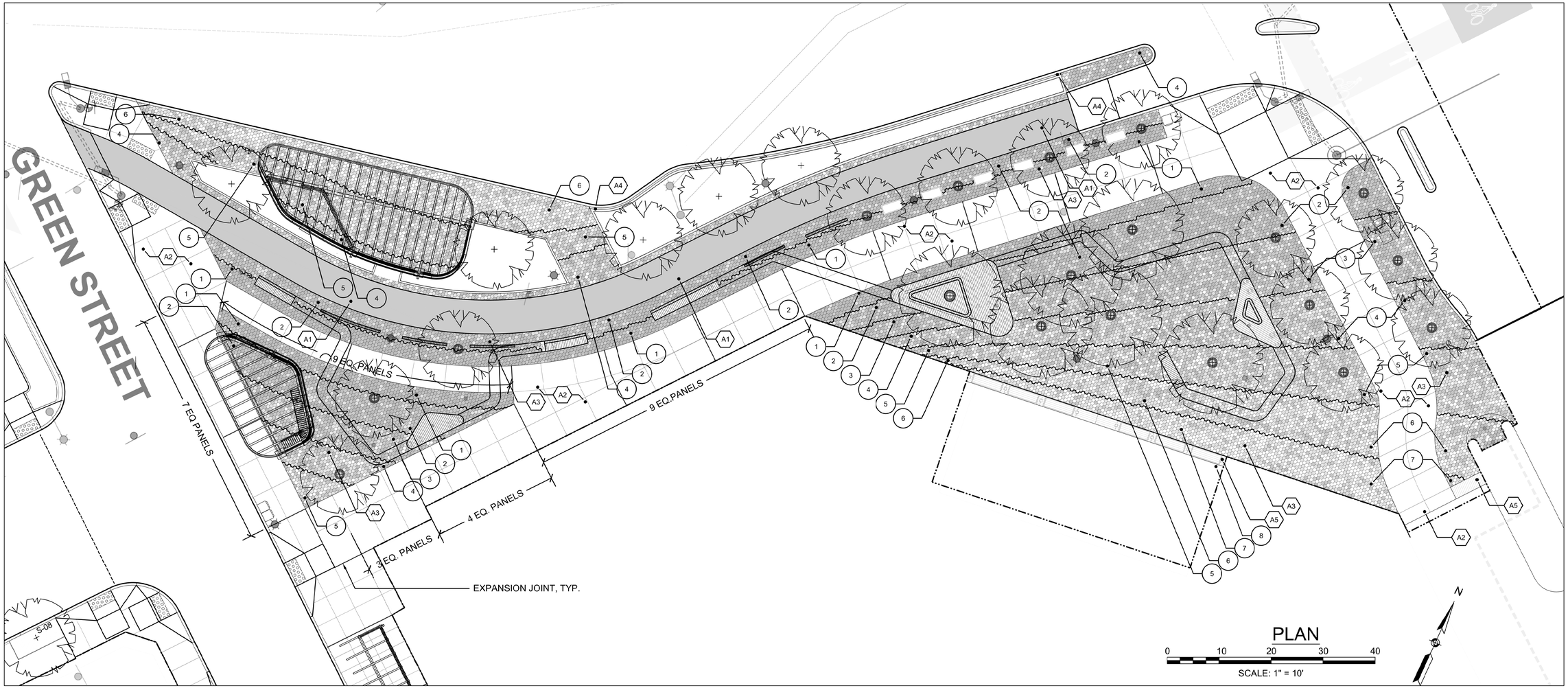

PLAN

0 10 20 30 40

SCALE: 1" = 10'

PAVING LEGEND

SYM.	DET.	DESCRIPTION
A1		PERVIOUS ASPHALT BIKE PATH - REFER TO CIVIL DRAWINGS
A2		CONCRETE PAVING - REFER TO CIVIL DRAWINGS
A3	1-8 L/L6.21	PRECAST UNIT PAVERS - HEXAGONAL PAVING FIELD
A4		PRECAST UNIT PAVERS, TYPE E - AINGLE PAVER COURSE, END TO END
A5		FLUSH GRANITE PAVING BAND

NOTES:

1. ⬡ SYM REFERS TO PAVING PATTERN ONLY. REFER TO MATERIALS LEGEND AND DETAILS FOR SUBGRADE AND BASE CONDITION
2. ⯁ SYM REFERS TO POINT OF BEGINNING FOR PAVING PATTERN LAYOUT. ALIGN PAVING WITH SITE IMPROVEMENT AT THAT LOCATION. CUT PAVERS AS REQUIRED BETWEEN POINTS OF BEGINNING TO ACCOMODATE INCONSISTENCIES IN FINAL LAYOUT.
3. DIMENSIONS ARE TO WALL FACE, CURB FACE, PAVEMENT EDGE, EDGE OR CENTERLINE OF IMPROVEMENT OR AS OTHERWISE NOTED.
4. PAVING LAYOUT CONSTANTS:
   a. UNLESS OTHERWISE NOTED, PAVING PATTERN REPEATS ITSELF IN BOTH DIRECTIONS.
   b. PAVING JOINTS SHALL REMAIN PERPENDICULAR AND PARALLEL.
   c. ALIGN PAVING JOINTS TO OTHER OBJECTS AS INDICATED.
   d. DRAIN GRATES AND RIMS SHALL TIGHTLY ABUT ADJACENT CURBS, WALLS, BENCHES, EDGES, ETC.

PAVING LEGEND

TAG	BLEND			
	PAVER A	PAVER B	PAVER C	PAVER D
1	70%	25%	5%	0%
2	50%	35%	15%	0%
3	30%	40%	25%	5%
4	15%	35%	40%	10%

PAVING LEGEND

5	5%	40%	40%	15%
6	0%	25%	45%	30%
7	0%	15%	40%	45%
8	0%	10%	30%	60%

NOTES:

1) ◯ SYM REFERS TO PAVING PATTERN ONLY. REFER TO MATERIALS LEGEND FOR SUBGRADE AND BASE CONDITION.

ISSUED FOR BID

HDR ENGINEERING, INC.
99 HIGH STREET, SUITE 2300
BOSTON, MASSACHUSETTS 02110-2378
(617) 357-7700

MASSACHUSETTS ROBERT UHLIG REGISTERED LANDSCAPE ARCHITECT No. 981
04/18/2022

Scale			
Date			
Job No.			
Designed by			
Drawn by			
Checked by	No.	Description	Date
Approved by	REVISIONS		

THE WORKS — CAMBRIDGE DEPARTMENT OF PUBLIC WORKS

Client	CITY OF CAMBRIDGE, MA	Sheet	L-5.20
Project	RIVER STREET INFRASTRUCTURE AND STREETSCAPE PROJECT	Total Sheets	381
Drawing	**CARL BARRON PLAZA PAVING PLAN**	File No.	

File: C:\PWWORKINGIEAST01\D1174456\7113XXX_LA(DESIGN)_L-5.20 CARL BARRON PAVING PLAN.DWG Plotted: 4/17/2022 8:05:38 AM

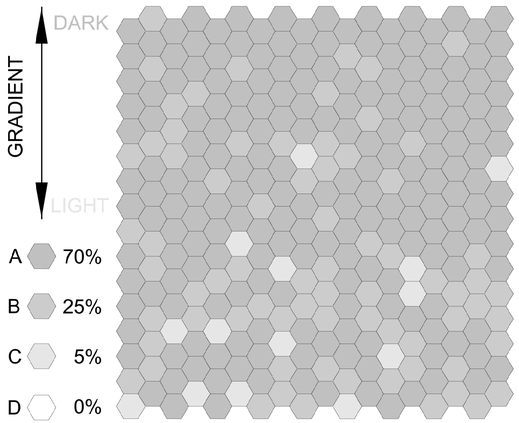

1 **PAVING MODULE -1**
SCALE 1/2"=1'-0"

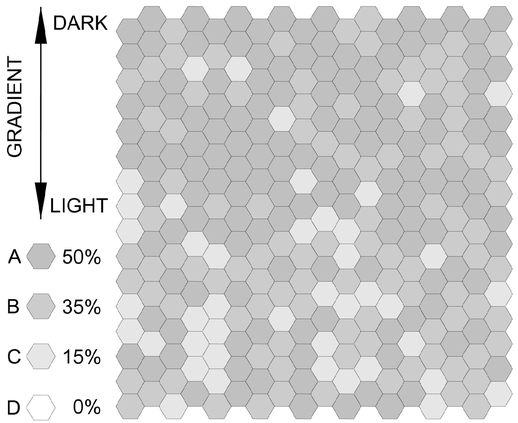

2 **PAVING MODULE -2**
SCALE 1/2"=1'-0"

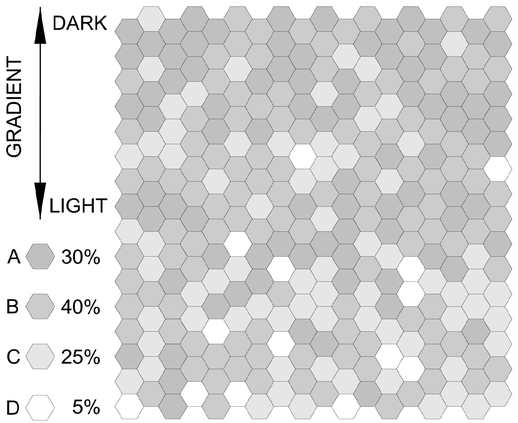

3 **PAVING MODULE -3**
SCALE 1/2"=1'-0"

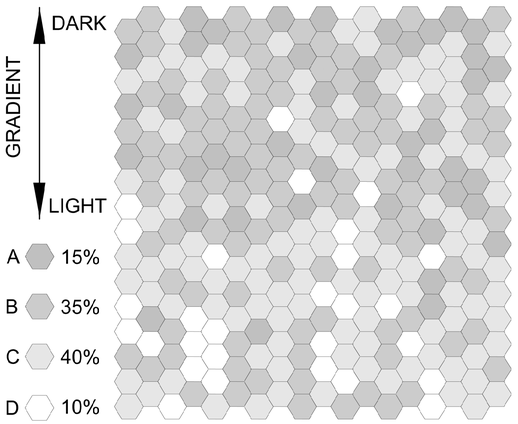

4 **PAVING MODULE -4**
SCALE 1/2"=1'-0"

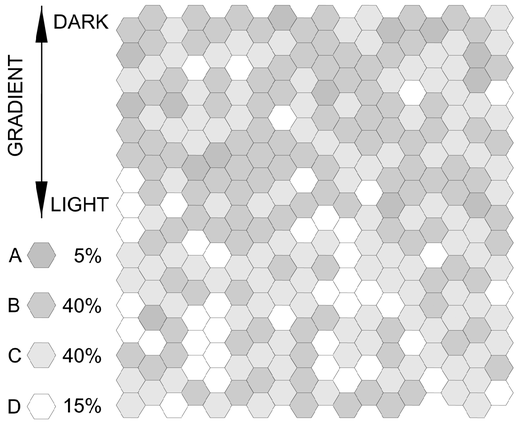

5 **PAVING MODULE -5**
SCALE 1/2"=1'-0"

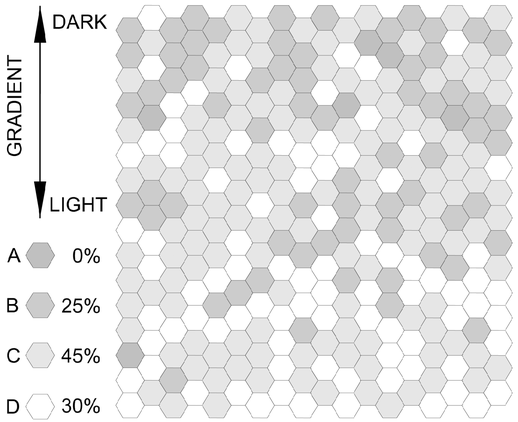

6 **PAVING MODULE -6**
SCALE 1/2"=1'-0"

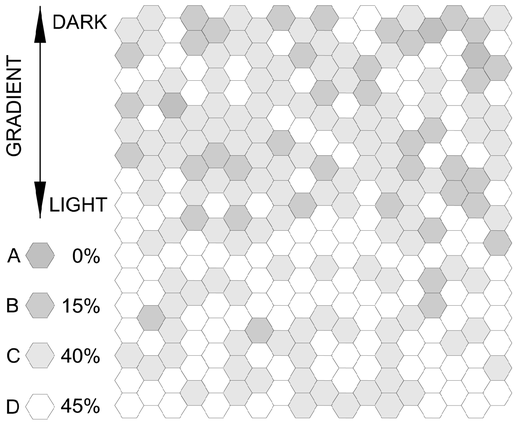

7 **PAVING MODULE -7**
SCALE 1/2"=1'-0"

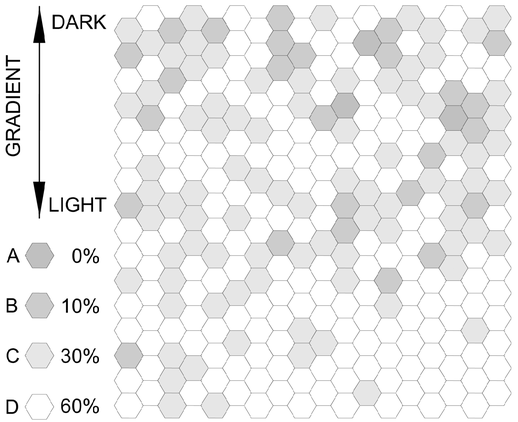

8 **PAVING MODULE -8**
SCALE 1/2"=1'-0"

File: C:\PWWORKING\EAST01\D1174456\7113XXX_LA(DESIGN)_L-5.20 CARL BARRON PAVING PLAN.DWG Plotted: 5/3/2022 8:36:09 AM

ISSUED FOR BID

HDR ENGINEERING, INC.
99 HIGH STREET, SUITE 2300
BOSTON, MASSACHUSETTS 02110–2378
(617) 357–7700

MASSACHUSETTS ROBERT UHLIG No. 881 REGISTERED LANDSCAPE ARCHITECT
05/02/2022

Scale			
Date			
Job No.			
Designed by			
Drawn by			
Checked by	No.	Description	Date
Approved by	REVISIONS		

THE CAMBRIDGE DEPARTMENT OF PUBLIC WORKS

Client: CITY OF CAMBRIDGE, MA
Project: RIVER STREET
INFRASTRUCTURE AND STREETSCAPE PROJECT
Drawing: **CARL BARRON PLAZA PAVING PLAN ENLARGEMENTS**
Sheet: L-5.21
Total Sheets: 381
File No.

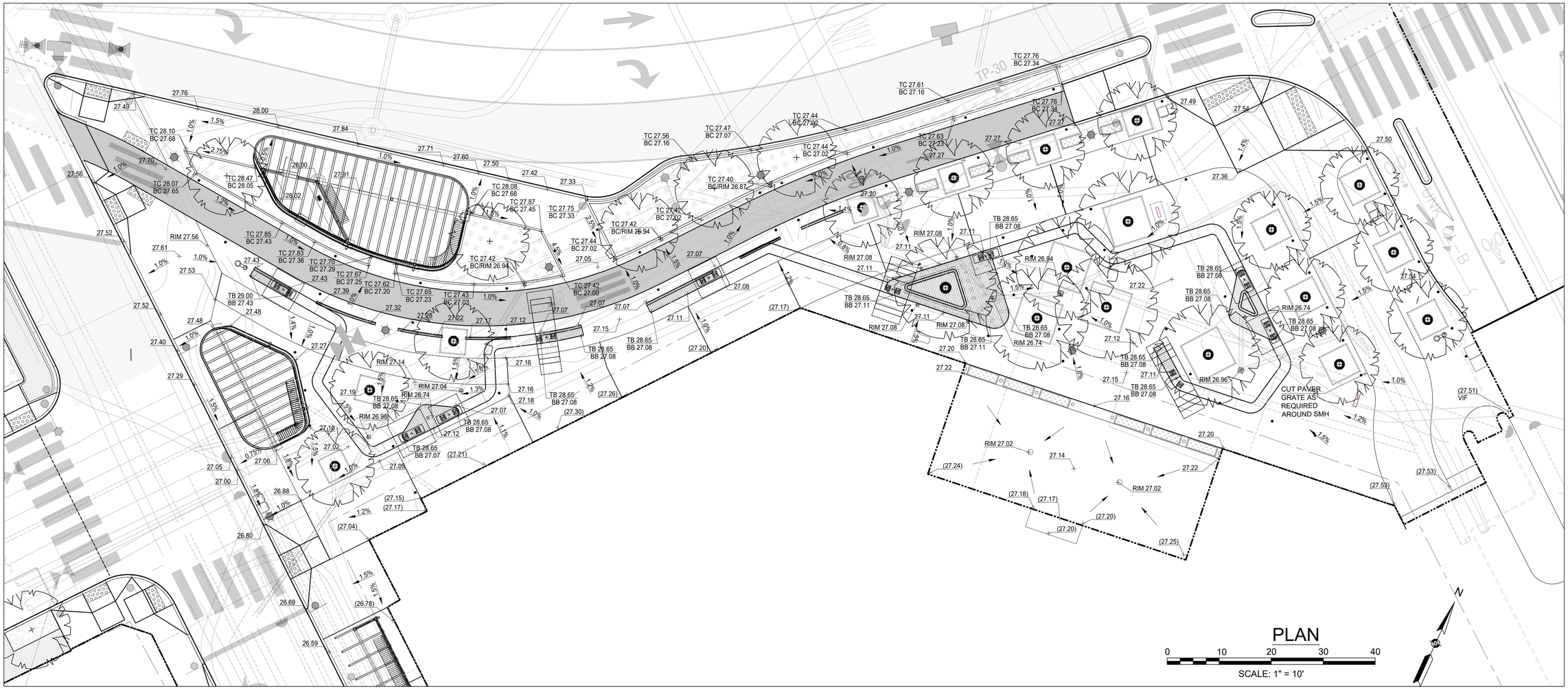

GRADING NOTES

1. EMPLOY A LICENSED SURVEYOR TO VERIFY AND LAYOUT GRADES, LINES AND DIMENSIONS SHOWN ON DRAWINGS. VERIFY EXISTING GRADES AND ELEVATIONS OF ADJACENT SITE CONDITIONS WITH ELEVATIONS ON DRAWINGS PRIOR TO BEGINNING WORK. IT IS THE RESPONSIBILITY OF THE CONTRACTOR TO REPORT DISCREPANCIES TO THE OWNER'S REPRESENTATIVE IMMEDIATELY AND RECEIVE WRITTEN INSTRUCTIONS PRIOR TO PROCEEDING WITH CONSTRUCTION.
2. SEE CIVIL DRAWINGS FOR GRADING OF ROADWAY TO BACK OF BIKE LANE, INCLUDING ALL ACCESSIBLE CURB RAMPS.
3. SEE CIVIL DRAWINGS FOR ROUTING, INVERTS, SIZING, CONNECTIONS, ETC. RELATED TO STORM SEWER DRAINS AND UNDERDRAINS BELOW PLANTING.
4. THE CONTRACTOR SHALL VERIFY EXISTING UTILITY LOCATIONS PRIOR TO EXCAVATION OF ANY TYPE.
5. EXCAVATE BY HAND IN CLOSE PROXIMITY TO EXISTING UTILITIES, STRUCTURES AND ITEMS TO REMAIN.
6. PLACE AND MAINTAIN WATER QUALITY AND EROSION CONTROL MEASURES AS REQUIRED TO COMPLY WITH REGULATING AUTHORITIES.
7. GRADE EVENLY BETWEEN SPOT GRADES AND CONTOURS AS NOTED.
8. RIM ELEVATIONS OF ANY NEW / EXISTING DRAINAGE AND UTILITY STRUCTURES SHALL BE FLUSH WITH SURROUNDING GRADES.
9. PITCH PAVEMENT TO PROVIDE POSITIVE DRAINAGE. PAVEMENT CROSS PITCH SHALL NOT BE GREATER THAN 1.9% OR LESS THAN 0.50%. NOTIFY LANDSCAPE ARCHITECT BEFORE PLACING: PAVEMENT OR BASE WITH PITCH 5% OR GREATER, OR 1% AND LESS; OR PAVEMENT WITH CROSS SLOPES GREATER THAN 2% OR LESS THAN 1%.
10. MATCH ALL EXISTING GRADES AT PROJECT LIMITS TO CREATE FLUSH SURFACE.

GRADING LEGEND

SYMBOL	DESCRIPTION		
--15'--	EXISTING CONTOUR	BW	BOTTOM OF WALL ELEVATION
—15—	PROPOSED CONTOUR	TC	TOP OF CURB ELEVATION
(XX.XX)	MATCH EXISTING SPOT ELEVATION	BC	BOTTOM OF CURB ELEVATION
+	PROPOSED SPOT ELEVATION	TB	TOP OF BENCH ELEVATION
RIM	TOP OF DRAINAGE INLET	BB	BOTTOM OF BENCH ELEVATION
HP	HIGH POINT		SUBDRAIN LINE - REFER TO CIVIL DRAWINGS FOR INVERTS AND PIPE CONNECTIONS
EX	EXISTING GRADE TO REMAIN		
TW	TOP OF WALL ELEVATION		

ISSUED FOR BID

HDR ENGINEERING, INC.
99 HIGH STREET, SUITE 2300
BOSTON, MASSACHUSETTS 02110–2378
(617) 357–7700

HALVORSON Tighe&Bond STUDIO
25 KINGSTON ST, BOSTON MA 02111-2200
(PHONE) 617.536.0380
WWW.HALVORSONDESIGN.COM

MASSACHUSETTS ROBERT URLIG No. 981 REGISTERED LANDSCAPE ARCHITECT
04/18/2022

Scale			
Date			
Job No.			
Designed by			
Drawn by			
Checked by	No.	Description	Date
Approved by	REVISIONS		

THE WORKS — CAMBRIDGE DEPARTMENT OF PUBLIC WORKS

Client: CITY OF CAMBRIDGE, MA	Sheet: L-5.30
Project: RIVER STREET INFRASTRUCTURE AND STREETSCAPE PROJECT	Total Sheets: 381
Drawing: **CARL BARRON PLAZA GRADING PLAN**	File No.

File: C:\PWWORKING\EAST\D1\D1174456\7113XXX_LA(DESIGN)_L-5.30 CARL BARRON GRADING PLAN.DWG Plotted: 4/17/2022 8:14:19 AM

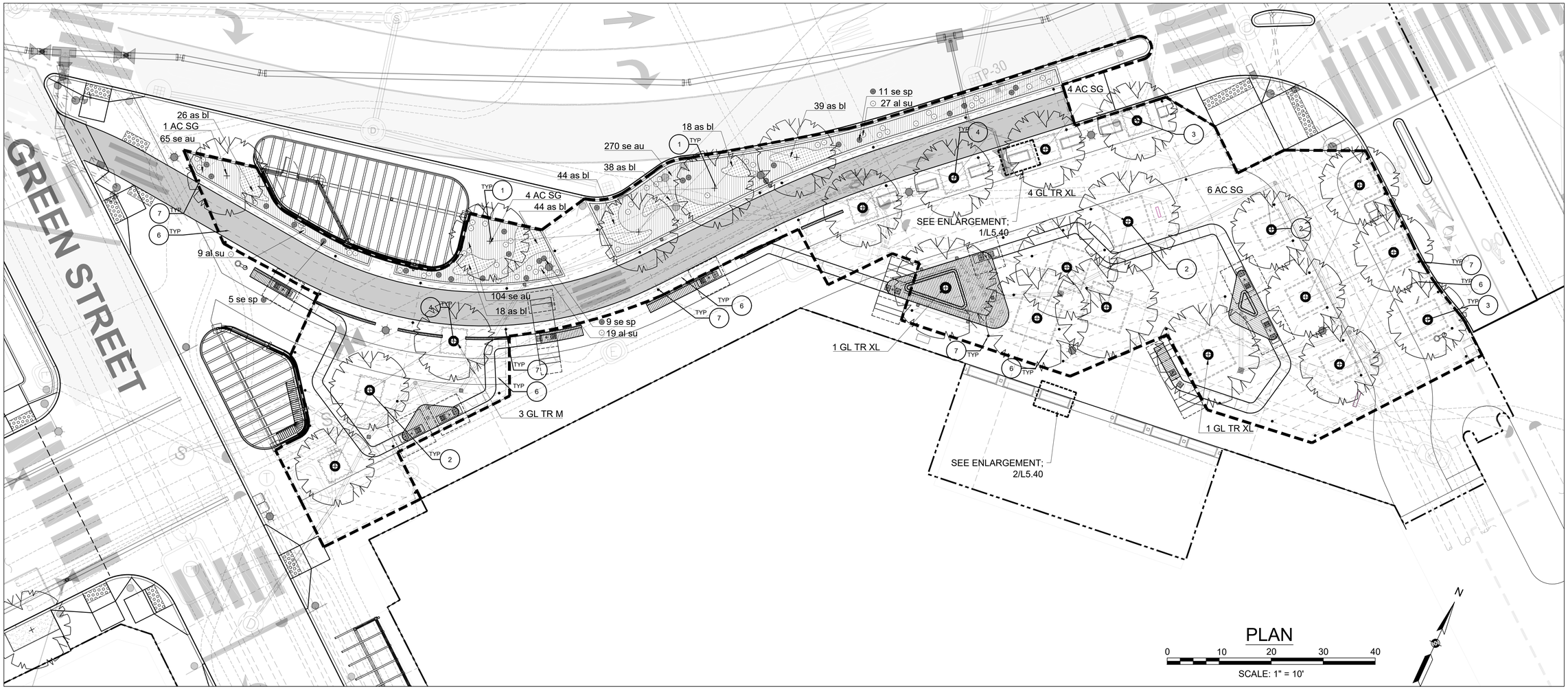

PLANTING NOTES

1. LANDSCAPE ARCHITECT TO APPROVE PLANT MATERIAL AT THE NURSERY AND AGAIN AT SITE PRIOR TO PLANTING.
2. PLANT MATERIAL SHALL CONFORM TO "THE AMERICAN STANDARD FOR NURSERY STOCK", PUBLISHED BY AMERICANHORT (WWW.AMERICANHORT.ORG).
3. NO SUBSTITUTIONS OF PLANT SPECIES WITHOUT LANDSCAPE ARCHITECT'S WRITTEN APPROVAL.
4. LOCATE AND VERIFY UTILITY LINE LOCATIONS PRIOR TO STAKING AND REPORT CONFLICT TO LANDSCAPE ARCHITECT.
5. PLANTING DEMOLITION DEBRIS, GARBAGE, LUMPS OF CONCRETE, STEEL AND OTHER MATERIALS DELETERIOUS TO PLANT'S HEALTH AS DETERMINED BY LANDSCAPE ARCHITECT SHALL BE REMOVED FROM ALL PLANTING AREAS.
6. NO PLANTING TO BE INSTALLED BEFORE ACCEPTANCE OF ROUGH GRADING.
7. ALL PROPOSED TREE LOCATIONS SHALL BE STAKED OR LAID OUT IN THEIR APPROXIMATE LOCATION BY THE CONTRACTOR. REFER TO LAYOUT AND PLANTING SHEETS FOR LAYOUT INFORMATION. THE CONTRACTOR SHALL ADJUST THE LOCATIONS AS REQUESTED BY THE LANDSCAPE ARCHITECT TO ACCOUNT FOR SUBSURFACE UTILITIES AND OTHER FIELD CONDITIONS. FINAL LOCATIONS OF ALL PLANTS MUST BE APPROVED BY THE LANDSCAPE ARCHITECT PRIOR TO PLANTING.
8. TOTAL QUANTITY OF PLANTS FOR EACH AREA TO BE AVAILABLE ON SITE AT THE TIME OF PLANTING FOR FIELD LAYOUT BY ENGINEER. NO PARTIAL LAYOUT AND PLANTING OF AREAS WILL BE ACCEPTABLE.
9. INSTALL PLANTS WITH ROOT FLARES FLUSH WITH FINISHED GRADE OR TOP OF STRUCTURAL SOIL. IMMEDIATELY REPLANT PLANTS THAT SETTLE OUT OF PLUMB OR BELOW FINISHED GRADE.
10. PLANT UNDER FULL TIME SUPERVISION OF CERTIFIED ARBORIST, NURSERYMAN, OR LICENSED LANDSCAPE ARCHITECT. PROVIDE WRITTEN VERIFICATION OF CERTIFICATION AND/OR LICENSE FOR LANDSCAPE ARCHITECT'S APPROVAL.
11. LOOSE OR CRACKED ROOT BALLS ARE UNACCEPTABLE.
12. DO NOT USE TREE WRAP.
13. REMOVE TOP 2/3 OF WIRE BASKETS. REMOVE TOP 1/3 OF BURLAP. SYNTHETIC BURLAP WILL NOT BE ACCEPTED. FOR CONTAINER PLANTS, REMOVE CONTAINER AND SCARIFY EDGES OF ROOT BALL 1/2" DEEP IN A MINIMUM OF FOUR LOCATIONS.
14. WATER PLANTS THOROUGHLY AFTER INSTALLATION, A MINIMUM OF TWICE WITHIN THE FIRST 24 HOURS.
15. RAISE AND REPLANT PLANTS THAT SETTLE AFTER PLANTING AND WATERING.
16. PRUNE TREES IN CLOSE PROXIMITY TO EACH OTHER AS REQUIRED AT TIME OF INSTALLATION.PRUNING TO BE DONE BY CERTIFIED ARBORIST.

PLANTING LEGEND

TAG	DESCRIPTION	DETAIL
1	TREE PLANTING	7 L3.05
2	TREE PLANTING - IN PRECAST UNIT PAVERS	1 L5.52
3	TREE PLANTING - IN PRECAST UNIT PAVERS - CURB CONDITION	1 L5.53
4	TREE PLANTING - IN PRECAST UNIT PAVERS - AT SEPARATED BIKE LANE	2 L5.53
5	TREE PLANTING - IN PLATFORM SEATING	6 L5.51
6	AERATION PIPE	X L4.50
7	AERATION GRATE -TYPE 2	6 L5.51

PLANTING KEY

SYMBOL	DESCRIPTION
	EXISTING TREE TO REMAIN
	PROPOSED TREE
	LIMIT OF SAND BASED STRUCTURAL SOIL - SEE PAVING AND PLANTING DETAILS
	AERATION PIPE WITH DRIP IRRIGATION- REFER TO IRRIGATION DRAWINGS
	AERATION GRATE - TYPE 2

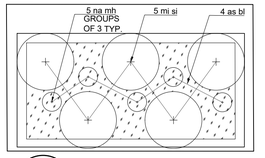

1 PLANTER TYPE-1
SCALE 3/4"=1'-0"

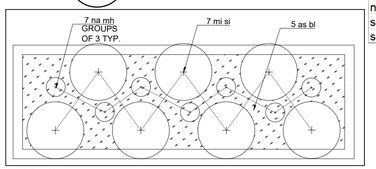

2 PLANTER TYPE-2
SCALE 3/4"=1'-0"

PLANT SCHEDULE

Symbol	Quantity	Botanical Name	Common Name	Size	Spacing
STREET TREES					
AC SG	15	*Acer freemanii 'Sienna Glenn'*	Sienna Glen Maple	4.5-5"caliper, B&B	See Plan
GL TR M	3	*Gleditsia triacanthos inermis 'Shademaster'*	Shademaster Honey Locust	4.5-5" caliper, B&B	See Plan
GL TR XL	6	*Gleditsia triacanthos inermis 'Shademaster'*	Shademaster Honey Locust	6-6.5" caliper, B&B	See Plan
GRASSES,GROUNDCOVER AND PERENNIALS					
al su	67	Allium 'Summer Beauty'	Summer Beauty Allium	2 gal	18" O.C
as bl	285	*Amsonia x 'Blue Ice'*	Blue Star Flower	2 gal	12" O.C.
mi si	192	*Miscanthus sinensis 'Gracillimus'*	Maiden Hair Grass	2 gal	18" O.C.
na mh	900	*Narcissus' Mount Hood'*	Mount Hood daffodil	bulbs	18" O.C.
se au	457	*Sesleria autumnalis*	Autumn moor grass	2 gal	15" O.C.
se sp	25	*Sedum spectabile ' Brillant'*	Showy Stonecrop	2 gal	18" O.C.

ISSUED FOR BID

HDR ENGINEERING, INC.
99 HIGH STREET, SUITE 2300
BOSTON, MASSACHUSETTS 02110–2378
(617) 357–7700

HALVORSON Tighe&Bond STUDIO
25 KINGSTON ST, BOSTON MA 02111-2200
(PHONE) 617.536.0380
WWW.HALVORSONDESIGN.COM

MASSACHUSETTS ROBERT UHLIG No. 981 REGISTERED LANDSCAPE ARCHITECT
04/18/2022

Scale			
Date			
Job No.			
Designed by			
Drawn by			
Checked by	No.	Description	Date
Approved by	REVISIONS		

THE WORKS CAMBRIDGE DEPARTMENT OF PUBLIC WORKS

Client: CITY OF CAMBRIDGE, MA	Sheet: L-5.40
Project: RIVER STREET INFRASTRUCTURE AND STREETSCAPE PROJECT	Total Sheets: 381
Drawing: **CARL BARRON PLAZA PLANTING PLAN**	File No.

File: C:\PWWORKING\EAST01\D1174456\7113XXX_LA(DESIGN)_L-5.40 CARL BARRON PLANTING
PLAN.DWG Plotted: 4/17/2022 7:55:58 AM

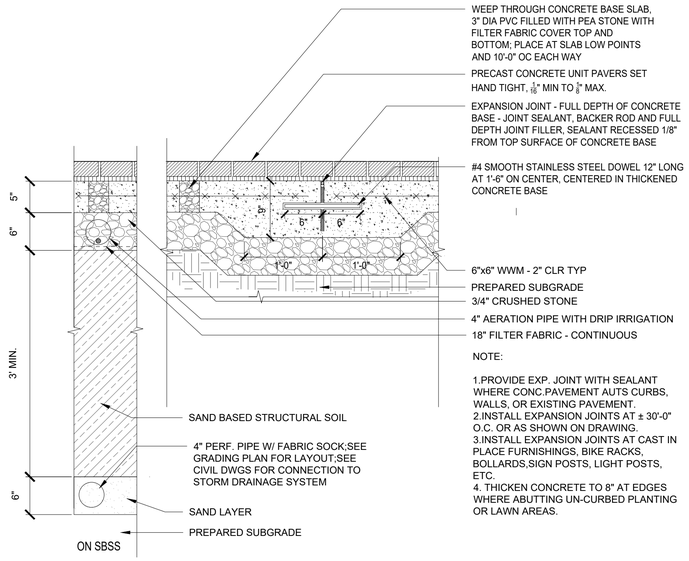

1 **PRECAST UNIT PAVERS ON CONCRETE BASE**
SCALE 1"=1'-0"

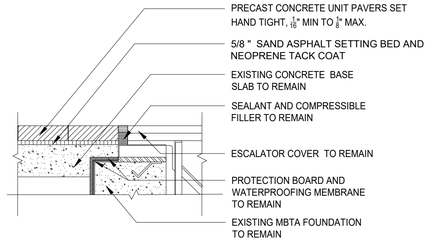

2 **PRECAST UNIT PAVERS ON EXISTING CONCRETE BASE**
SCALE 1"=1'-0"

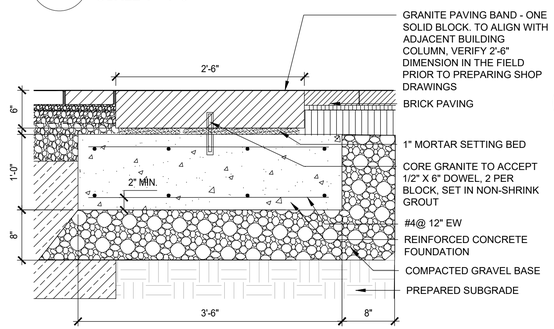

3 **FLUSH GRANITE PAVING BAND- CB PLAZA**
SCALE 1"=1'-0"

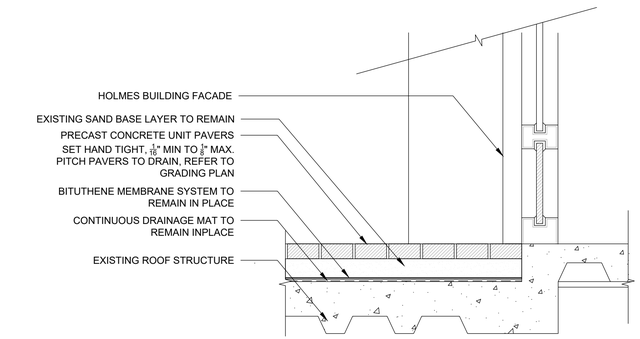

4 **PRECAST UNIT PAVERS - ON STRUCTURE**
SCALE 1"=1'-0"

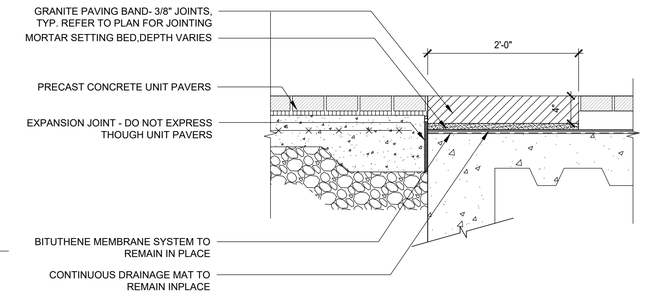

5 **FLUSH GRANITE PAVING BAND - CB PLAZA- OVER STRUCTURE**
SCALE 1"=1'-0"

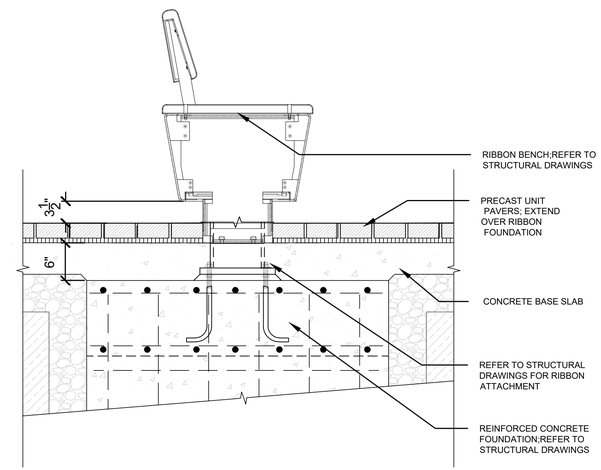

6 **PAVER INTERFACE AT SCULPTURAL RIBBON**
SCALE 1"=1'-0"

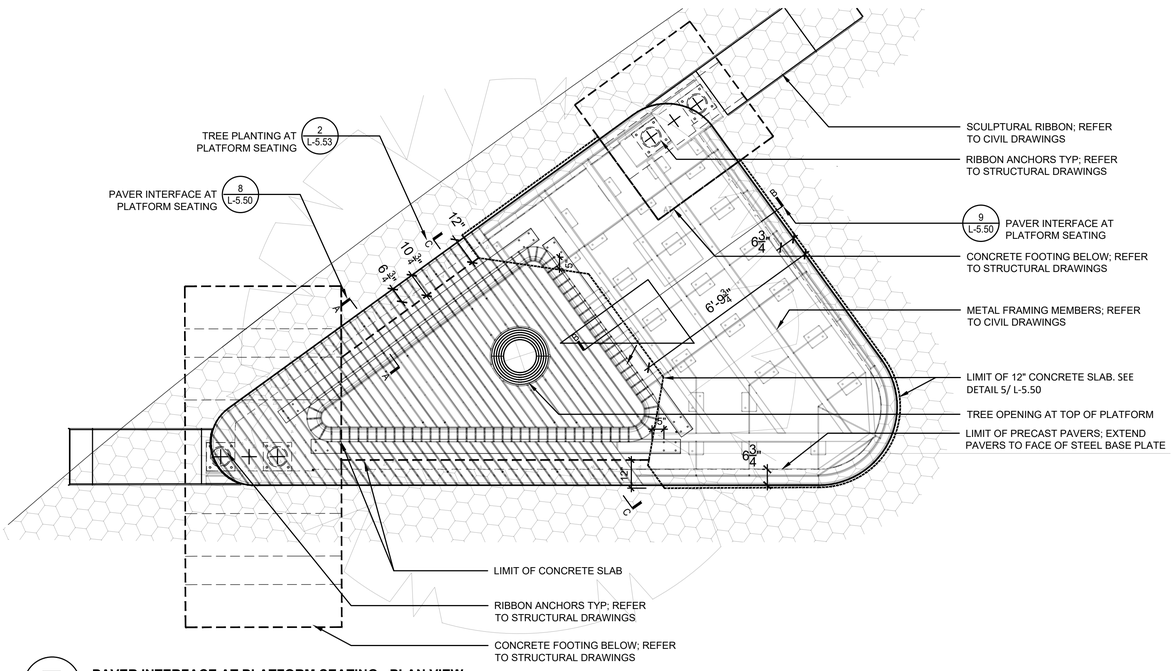

7 **PAVER INTERFACE AT PLATFORM SEATING - PLAN VIEW**
SCALE 3/8"=1'-0"

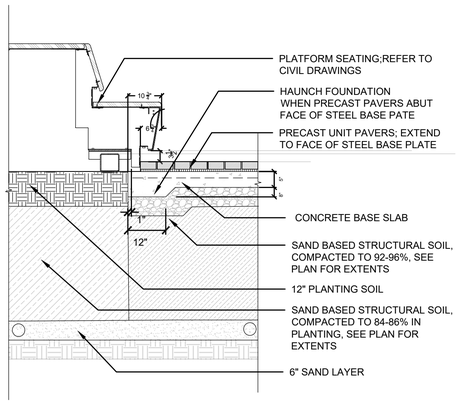

8 **PAVER INTERFACE AT PLATFORM SEATING - SECTION A-A**
SCALE 1/2"=1'-0"

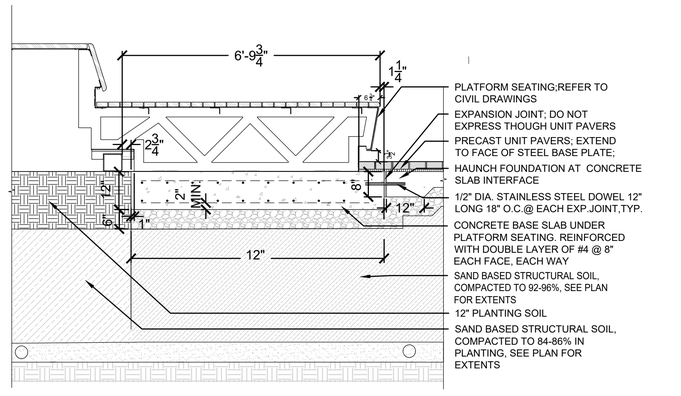

9 **PAVER INTERFACE AT PLATFORM SEATING - SECTION B-B**
SCALE 1/2"=1'-0"

ISSUED FOR BID

HDR ENGINEERING, INC.
99 HIGH STREET, SUITE 2300
BOSTON, MASSACHUSETTS 02110–2378
(617) 357–7700

HALVORSON Tighe&Bond STUDIO
25 KINGSTON ST. BOSTON MA 02111-2200
(PHONE) 617.536.0380
WWW.HALVORSONDESIGN.COM

MASSACHUSETTS ROBERT UHLIG No. 981 REGISTERED LANDSCAPE ARCHITECT
04/18/2022

Scale			
Date			
Job No.			
Designed by			
Drawn by			
Checked by	No.	Description	Date
Approved by	REVISIONS		

THE WORKS — CAMBRIDGE DEPARTMENT OF PUBLIC WORKS

Client: CITY OF CAMBRIDGE, MA	Sheet: L-5.50
Project: RIVER STREET INFRASTRUCTURE AND STREETSCAPE PROJECT	Total Sheets: 381
Drawing: **CARL BARRON PLAZA DETAILS**	File No.

Plotted: 4/14/2022 1:03:27 PM
File: C:\PWWORKING\EAST01\D1174456\7113XXX_LA(DESIGN)_L-5.50 CARL BARRON DETAILS.DWG

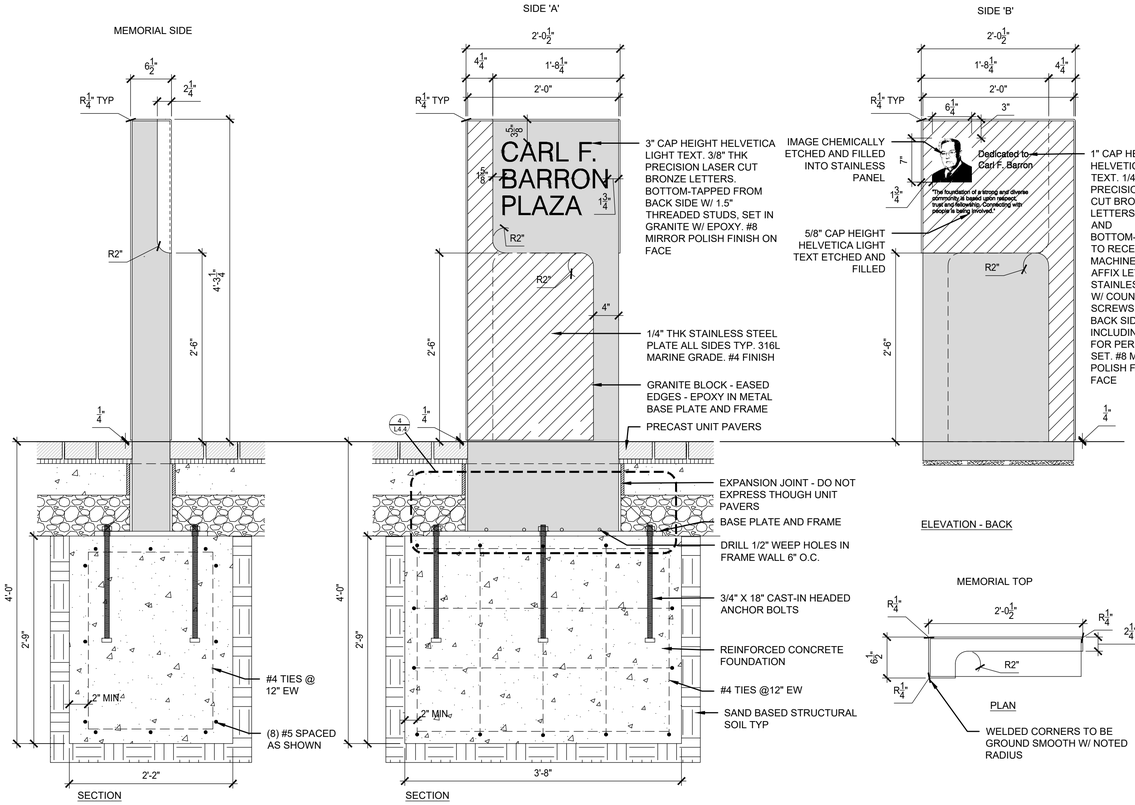

1 CARL BARRON MEMORIAL SIGN

SCALE 1"=1'-0"

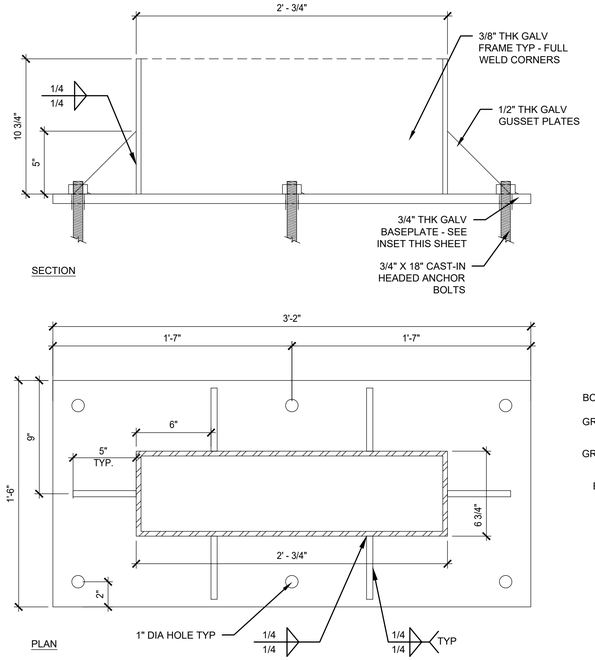

2 CARL BARRON MEMORIAL SIGN - ATTACHMENT

SCALE 2"=1'-0"

NOTES:

1) ANY DAMAGE TO THE EXISTING STRUCTURE AND THE WATERPROOFING SYSTEM SHALL BE REPAIRED AT NO EXPENSE TO THE CITY AND PRIVATE PROPERTY OWNER

2) REFER TO SHEET S-1.01 FOR GENERAL NOTES.

3) EXISTING CONDITIONS SHOWN ARE BASED OFF AVAILABLE RECORD INFORMATION, IF EXISTING CONDITIONS DIFFER FROM WHATS SHOWN, CONTRACTOR SHALL NOTIFY THE ENGINEER FOR DIRECTION

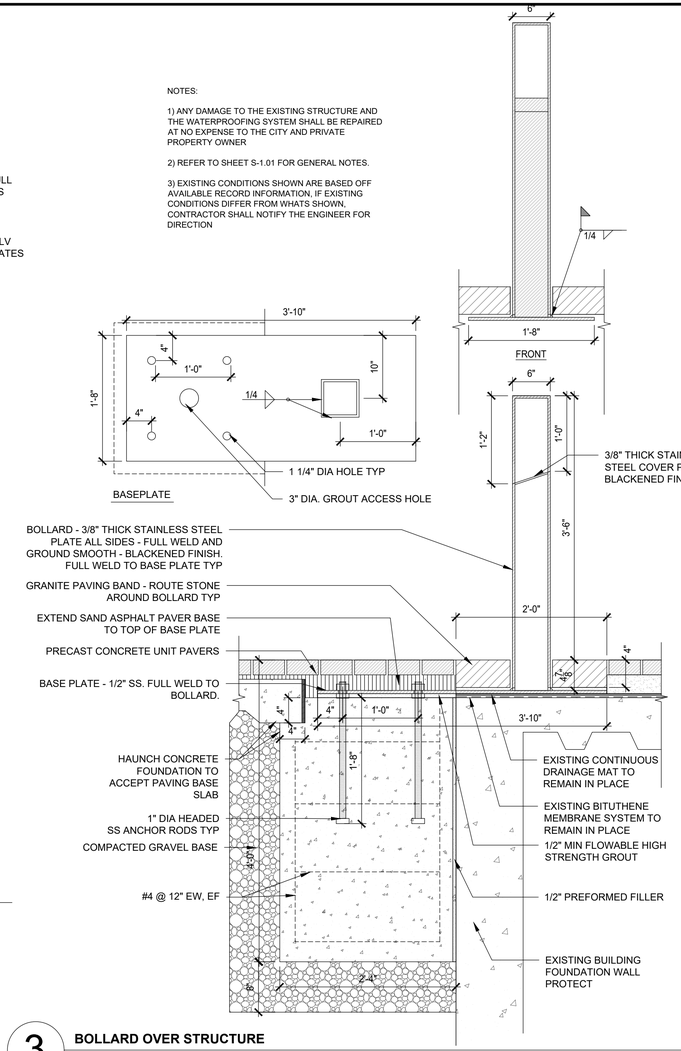

3 BOLLARD OVER STRUCTURE

SCALE 1"=1'-0"

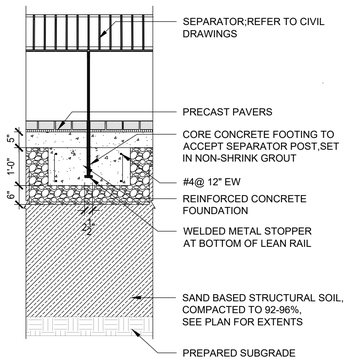

4 SEPARATOR

SCALE 1/2"=1'-0"

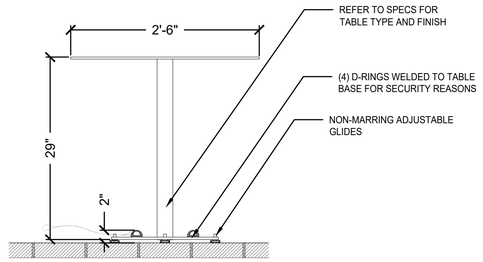

5 TABLE

SCALE 1"=1'-0"

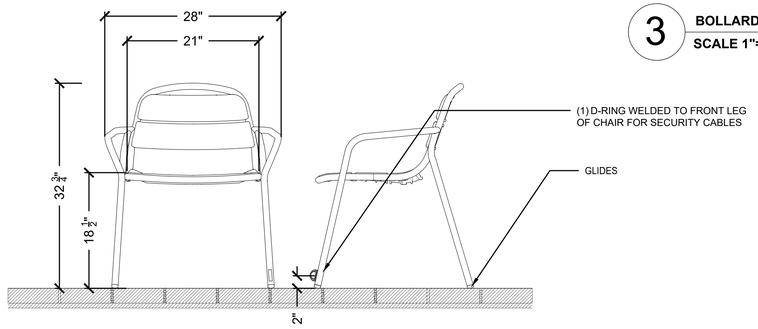

6 CHAIR

SCALE 1"=1'-0"

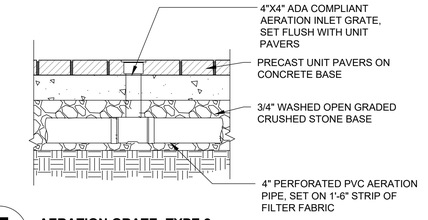

7 AERATION GRATE -TYPE 2

SCALE 1"=1'-0"

ISSUED FOR BID

HDR ENGINEERING, INC.
99 HIGH STREET, SUITE 2300
BOSTON, MASSACHUSETTS 02110–2378
(617) 357–7700

HALVORSON Tighe&Bond STUDIO
25 KINGSTON ST, BOSTON MA 02111-2200
(PHONE) 617.536.0380
WWW.HALVORSONDESIGN.COM

MASSACHUSETTS ROBERT URLEB No. 981 REGISTERED LANDSCAPE ARCHITECT
04/18/2022

Scale			
Date			
Job No.			
Designed by			
Drawn by			
Checked by	No.	Description	Date
Approved by	REVISIONS		

THE WORKS — CAMBRIDGE DEPARTMENT OF PUBLIC WORKS

Client: CITY OF CAMBRIDGE, MA	Sheet: L-5.51
Project: RIVER STREET INFRASTRUCTURE AND STREETSCAPE PROJECT	Total Sheets: 381
Drawing: **CARL BARRON PLAZA DETAILS**	File No.

Plotted: 4/14/2022 1:03:49 PM
File: C:\PWWORKING\EAST01\D1174456\7113XXX_LA(DESIGN)_L-5.50 CARL BARRON DETAILS.DWG

Plotted: 4/14/2022 1:04:08 PM
File: C:\PWWORKING\EAST01\D1174456\7113XXX_LA(DESIGN)_L-5.50 CARL BARRON DETAILS.DWG

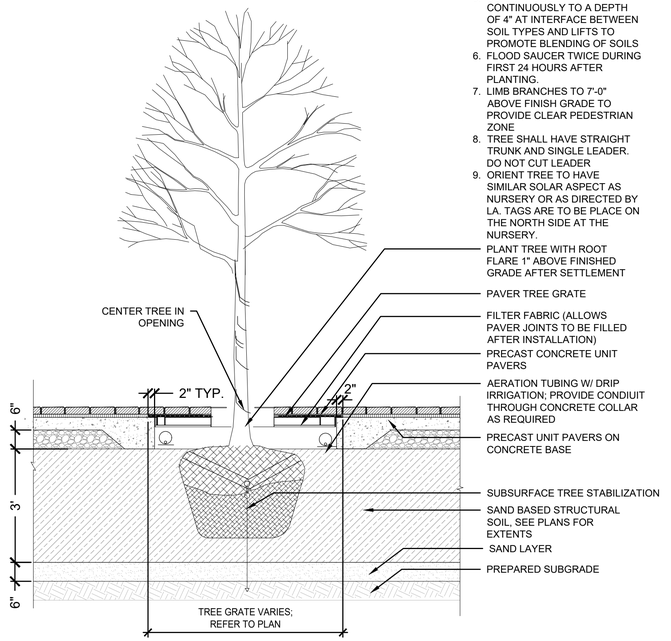

PLANTING NOTES:
1. REMOVE TOP 2/3 OF WIRE BASKETS AND BURLAP
2. LOOSE OR CRACKED ROOT BALLS WILL NOT BE ACCEPTED FOR PLANTING
3. SYNTHETIC BURLAP IS UNACCEPTABLE.
4. ROOT BALL SHALL SIT ON PREPARED SUBGRADE
5. SCARIFY SOILS CONTINUOUSLY TO A DEPTH OF 4" AT INTERFACE BETWEEN SOIL TYPES AND LIFTS TO PROMOTE BLENDING OF SOILS
6. FLOOD SAUCER TWICE DURING FIRST 24 HOURS AFTER PLANTING.
7. LIMB BRANCHES TO 7'-0" ABOVE FINISH GRADE TO PROVIDE CLEAR PEDESTRIAN ZONE
8. TREE SHALL HAVE STRAIGHT TRUNK AND SINGLE LEADER. DO NOT CUT LEADER
9. ORIENT TREE TO HAVE SIMILAR SOLAR ASPECT AS NURSERY OR AS DIRECTED BY LA. TAGS ARE TO BE PLACE ON THE NORTH SIDE AT THE NURSERY.

1 TREE PLANTING IN PAVERS
SCALE 1/2"=1'-0"

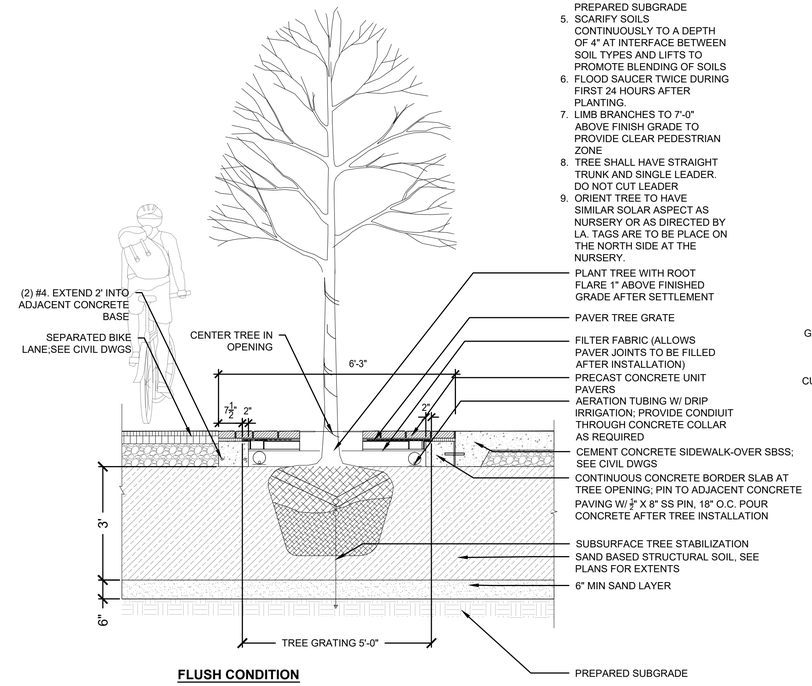

FLUSH CONDITION

PLANTING NOTES:
1. REMOVE TOP 2/3 OF WIRE BASKETS AND BURLAP
2. LOOSE OR CRACKED ROOT BALLS WILL NOT BE ACCEPTED FOR PLANTING
3. SYNTHETIC BURLAP IS UNACCEPTABLE.
4. ROOT BALL SHALL SIT ON PREPARED SUBGRADE
5. SCARIFY SOILS CONTINUOUSLY TO A DEPTH OF 4" AT INTERFACE BETWEEN SOIL TYPES AND LIFTS TO PROMOTE BLENDING OF SOILS
6. FLOOD SAUCER TWICE DURING FIRST 24 HOURS AFTER PLANTING.
7. LIMB BRANCHES TO 7'-0" ABOVE FINISH GRADE TO PROVIDE CLEAR PEDESTRIAN ZONE
8. TREE SHALL HAVE STRAIGHT TRUNK AND SINGLE LEADER. DO NOT CUT LEADER
9. ORIENT TREE TO HAVE SIMILAR SOLAR ASPECT AS NURSERY OR AS DIRECTED BY LA. TAGS ARE TO BE PLACE ON THE NORTH SIDE AT THE NURSERY.

2 TREE PLANTING IN PAVERS AT SEPARATED BIKE LANE
SCALE 1/2"=1'-0"

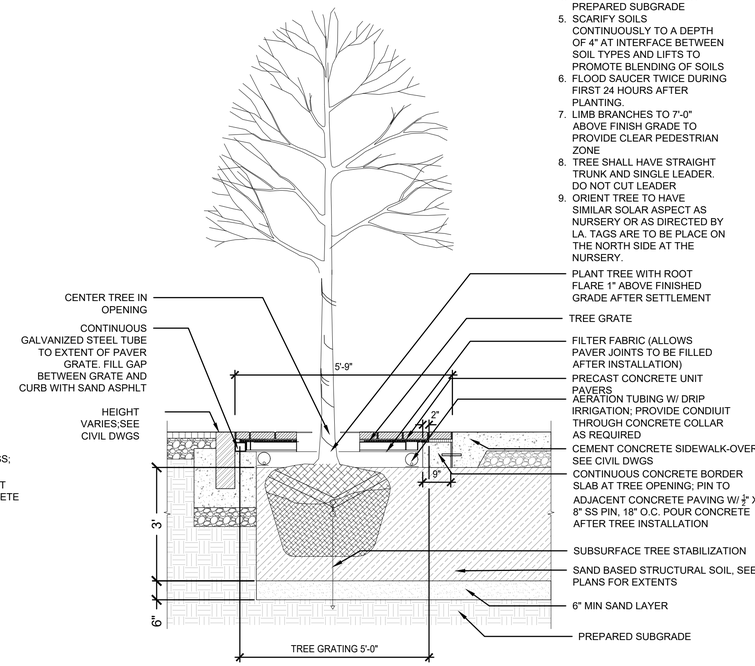

CURB CONDITION

PLANTING NOTES:
1. REMOVE TOP 2/3 OF WIRE BASKETS AND BURLAP
2. LOOSE OR CRACKED ROOT BALLS WILL NOT BE ACCEPTED FOR PLANTING
3. SYNTHETIC BURLAP IS UNACCEPTABLE.
4. ROOT BALL SHALL SIT ON PREPARED SUBGRADE
5. SCARIFY SOILS CONTINUOUSLY TO A DEPTH OF 4" AT INTERFACE BETWEEN SOIL TYPES AND LIFTS TO PROMOTE BLENDING OF SOILS
6. FLOOD SAUCER TWICE DURING FIRST 24 HOURS AFTER PLANTING.
7. LIMB BRANCHES TO 7'-0" ABOVE FINISH GRADE TO PROVIDE CLEAR PEDESTRIAN ZONE
8. TREE SHALL HAVE STRAIGHT TRUNK AND SINGLE LEADER. DO NOT CUT LEADER
9. ORIENT TREE TO HAVE SIMILAR SOLAR ASPECT AS NURSERY OR AS DIRECTED BY LA. TAGS ARE TO BE PLACE ON THE NORTH SIDE AT THE NURSERY.

ISSUED FOR BID

HDR ENGINEERING, INC.
99 HIGH STREET, SUITE 2300
BOSTON, MASSACHUSETTS 02110–2378
(617) 357–7700

HALVORSON Tighe&Bond STUDIO
25 KINGSTON ST. BOSTON MA 02111-2200
(PHONE) 617.536.0380
WWW.HALVORSONDESIGN.COM

MASSACHUSETTS ROBERT URLIG No. 981 REGISTERED LANDSCAPE ARCHITECT
04/18/2022

Scale			
Date			
Job No.			
Designed by			
Drawn by			
Checked by	No.	Description	Date
Approved by	REVISIONS		

THE WORKS — CAMBRIDGE DEPARTMENT OF PUBLIC WORKS

Client	CITY OF CAMBRIDGE, MA	Sheet	L-5.52
Project	RIVER STREET INFRASTRUCTURE AND STREETSCAPE PROJECT	Total Sheets	381
Drawing	**CARL BARRON PLAZA DETAILS**	File No.	

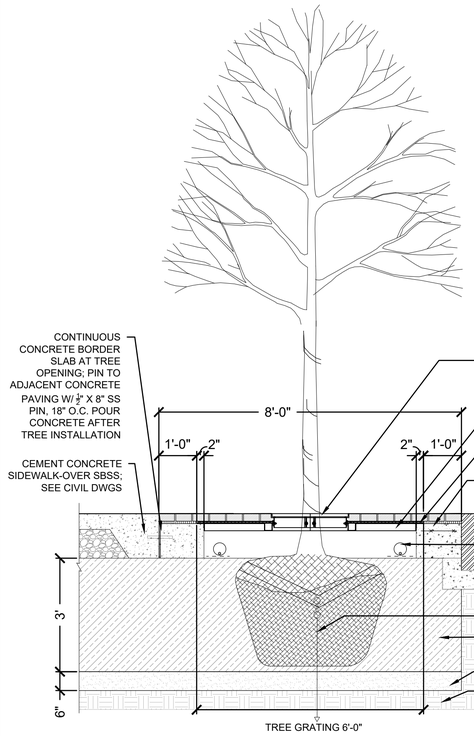

PLANTING NOTES:
1. REMOVE TOP 2/3 OF WIRE BASKETS AND BURLAP
2. LOOSE OR CRACKED ROOT BALLS WILL NOT BE ACCEPTED FOR PLANTING
3. SYNTHETIC BURLAP IS UNACCEPTABLE.
4. ROOT BALL SHALL SIT ON PREPARED SUBGRADE
5. SCARIFY SOILS CONTINUOUSLY TO A DEPTH OF 4" AT INTERFACE BETWEEN SOIL TYPES AND LIFTS TO PROMOTE BLENDING OF SOILS
6. FLOOD SAUCER TWICE DURING FIRST 24 HOURS AFTER PLANTING.
7. LIMB BRANCHES TO 7'-0" ABOVE FINISH GRADE TO PROVIDE CLEAR PEDESTRIAN ZONE
8. TREE SHALL HAVE STRAIGHT TRUNK AND SINGLE LEADER. DO NOT CUT LEADER
9. ORIENT TREE TO HAVE SIMILAR SOLAR ASPECT AS NURSERY OR AS DIRECTED BY LA. TAGS ARE TO BE PLACE ON THE NORTH SIDE AT THE NURSERY.

1 TREE PLANTING IN PAVERS AT CURB
SCALE 1/2"=1'-0"

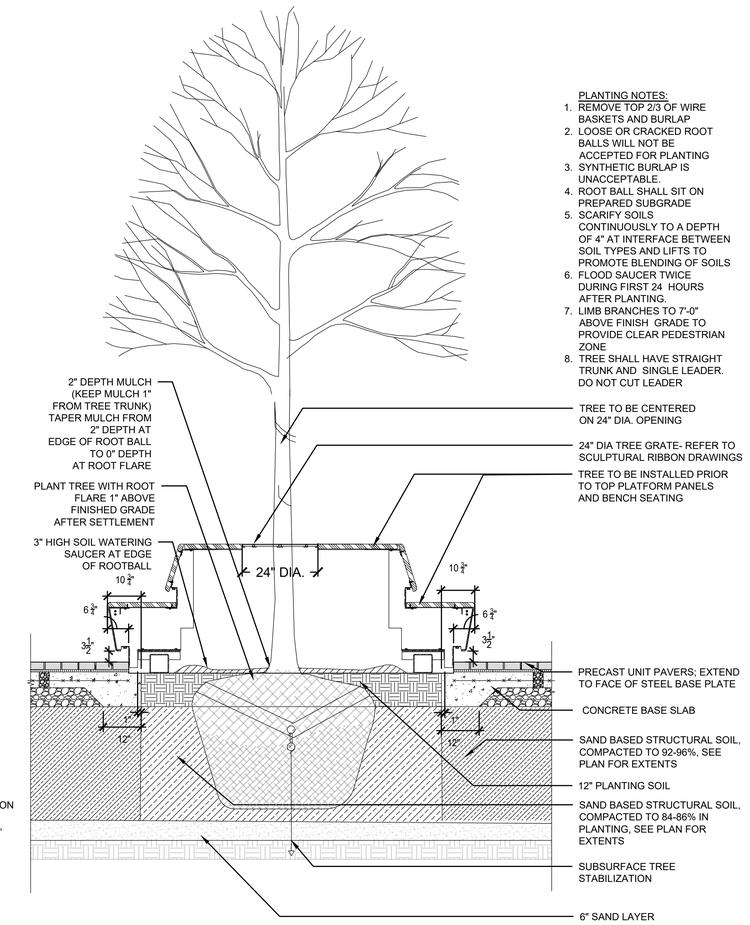

PLANTING NOTES:
1. REMOVE TOP 2/3 OF WIRE BASKETS AND BURLAP
2. LOOSE OR CRACKED ROOT BALLS WILL NOT BE ACCEPTED FOR PLANTING
3. SYNTHETIC BURLAP IS UNACCEPTABLE.
4. ROOT BALL SHALL SIT ON PREPARED SUBGRADE
5. SCARIFY SOILS CONTINUOUSLY TO A DEPTH OF 4" AT INTERFACE BETWEEN SOIL TYPES AND LIFTS TO PROMOTE BLENDING OF SOILS
6. FLOOD SAUCER TWICE DURING FIRST 24 HOURS AFTER PLANTING.
7. LIMB BRANCHES TO 7'-0" ABOVE FINISH GRADE TO PROVIDE CLEAR PEDESTRIAN ZONE
8. TREE SHALL HAVE STRAIGHT TRUNK AND SINGLE LEADER. DO NOT CUT LEADER

2 TREE PLANTING IN PLATFORM SEATING
SCALE 1/2"=1'-0"

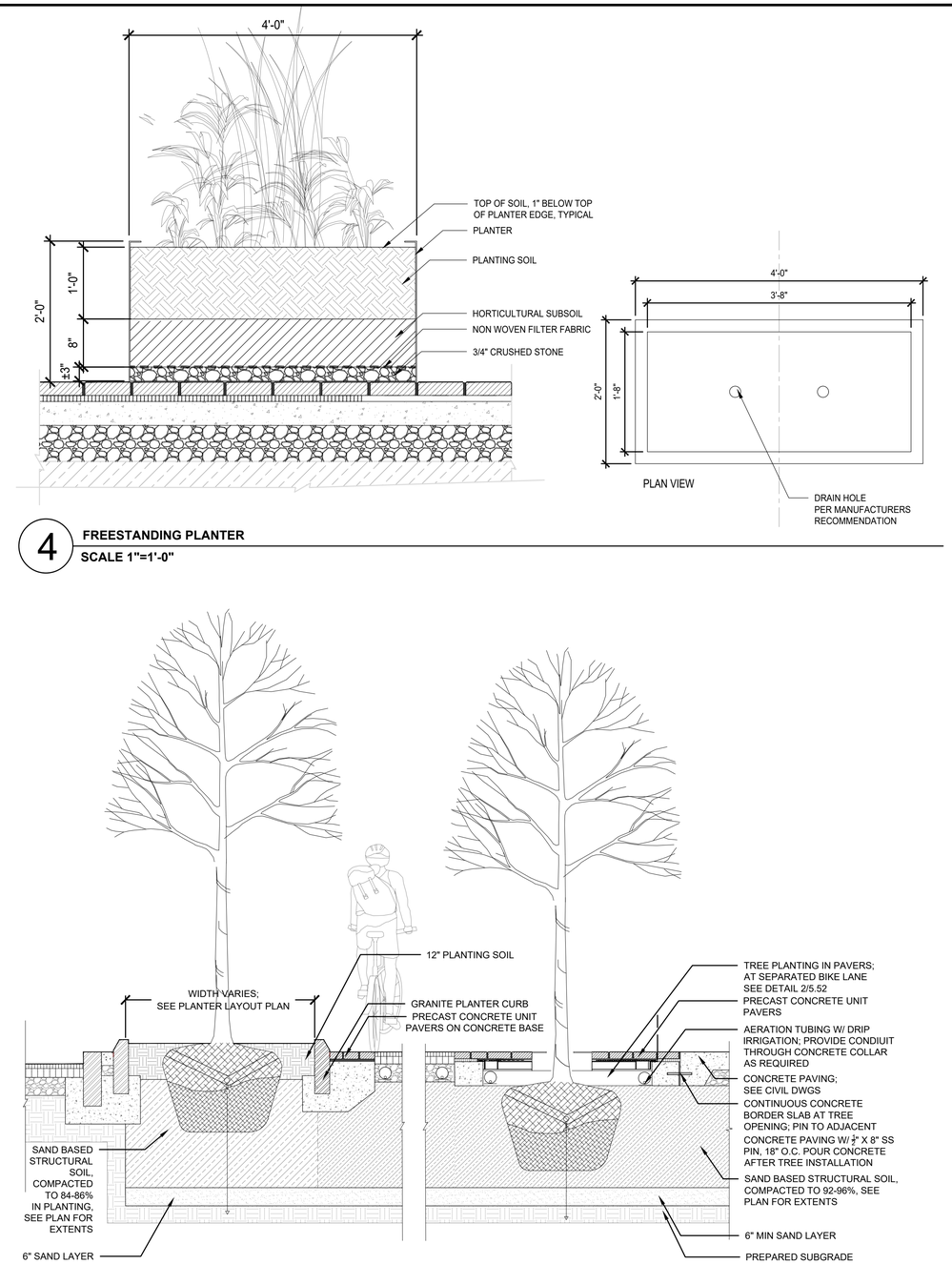

4 FREESTANDING PLANTER
SCALE 1"=1'-0"

3 SECTION AT RAISED PLANTER THROUGH CYCLE TRACK AND PAVER TREE GRATE
SCALE 1/2"=1'-0"

ISSUED FOR BID

HDR ENGINEERING, INC.
99 HIGH STREET, SUITE 2300
BOSTON, MASSACHUSETTS 02110–2378
(617) 357–7700

HALVORSON Tighe&Bond STUDIO
25 KINGSTON ST, BOSTON MA 02111-2200
(PHONE) 617.536.0380
WWW.HALVORSONDESIGN.COM

MASSACHUSETTS ROBERT URLIB No. 981 REGISTERED LANDSCAPE ARCHITECT
04/18/2022

Scale			
Date			
Job No.			
Designed by			
Drawn by			
Checked by	No.	Description	Date
Approved by	REVISIONS		

THE WORKS — CAMBRIDGE DEPARTMENT OF PUBLIC WORKS

Client	CITY OF CAMBRIDGE, MA	Sheet	L-5.53
Project	RIVER STREET INFRASTRUCTURE AND STREETSCAPE PROJECT	Total Sheets	381
Drawing	**CARL BARRON PLAZA SECTIONAL DETAIL**	File No.	

File: C:\PWWORKING\EAST01\D1174456\7113XXX_LA(DESIGN)_L-5.50 CARL BARRON DETAILS.DWG Plotted: 4/14/2022 1:04:28 PM

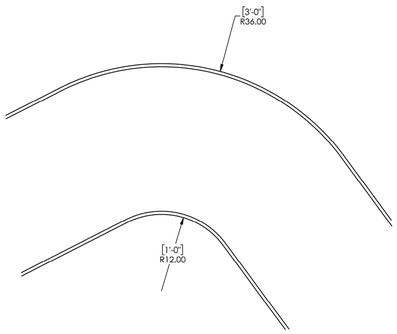

DETAIL B
SCALE 1 : 12
TYPICAL HORIZONTAL RADIUS

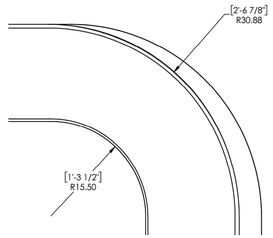

DETAIL C
SCALE 1 : 12
TYPICAL VERTICAL RADIUS

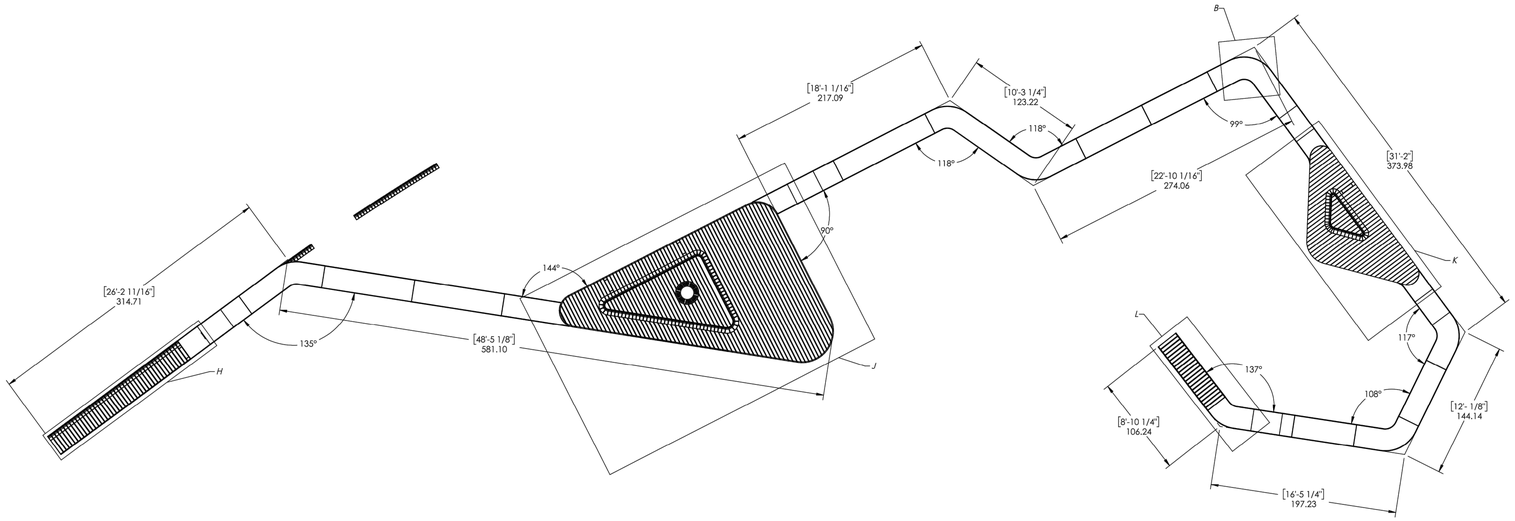

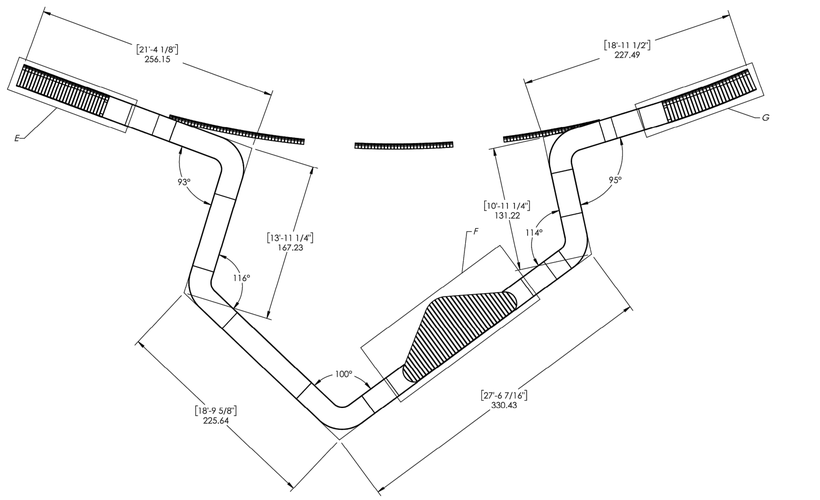

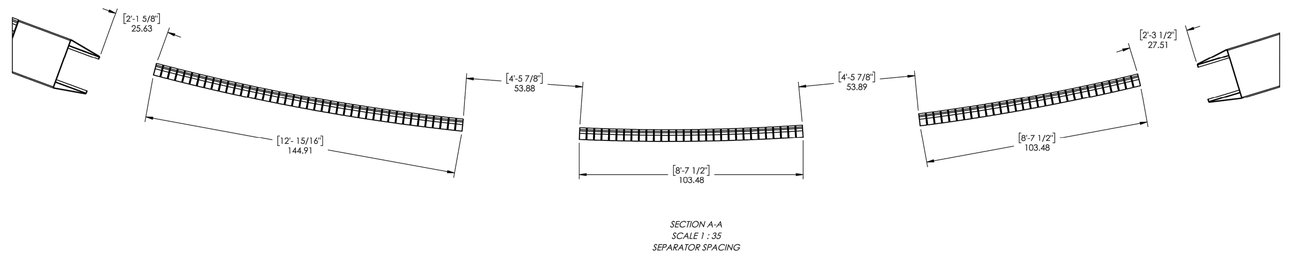

SECTION A-A
SCALE 1 : 35
SEPARATOR SPACING

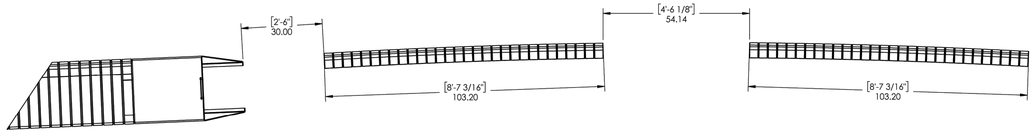

SECTION D-D
SCALE 1 : 28
SEPARATOR SPACING

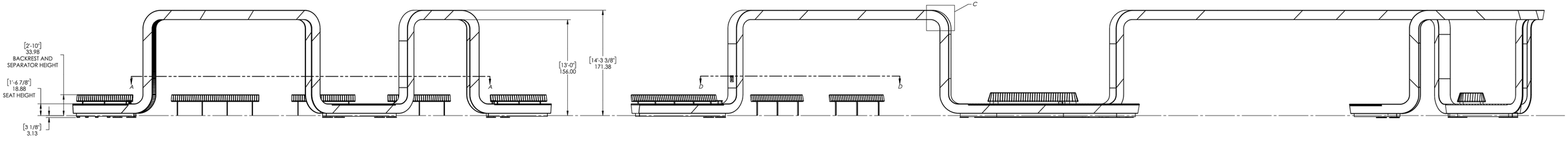

CONFORMED SET

HDR ENGINEERING, INC.
99 HIGH STREET, SUITE 2300
BOSTON, MASSACHUSETTS 02110–2378
(617) 357–7700

MARIO LOCOCO
CIVIL ENGINEER
NO. 53117
REGISTERED PROFESSIONAL ENGINEER
COMMONWEALTH OF MASSACHUSETTS
8/5/2022

Scale	AS SHOWN			
Date				
Job No.				
Designed by	BF			
Drawn by	BF	0	CONFORMED SET	8/5/2022
Checked by	ML	No.	Description	Date
Approved by	JW	REVISIONS		

THE WORKS
CAMBRIDGE DEPARTMENT OF PUBLIC

Client	CITY OF CAMBRIDGE, MA	Sheet	SC-1.01
Project	RIVER STREET INFRASTRUCTURE AND STREETSCAPE PROJECT	Total Sheets	381
Drawing	**RIBBON LAYOUT AND ELEVATION**	File No.	CNS

8/15/2022 2:44:15 PM
File: C:\PW\WORKING\EAST01\D2575531\SC-1.00 - RIBBON LAYOUT AND ELEVATION.DWG Plotted:

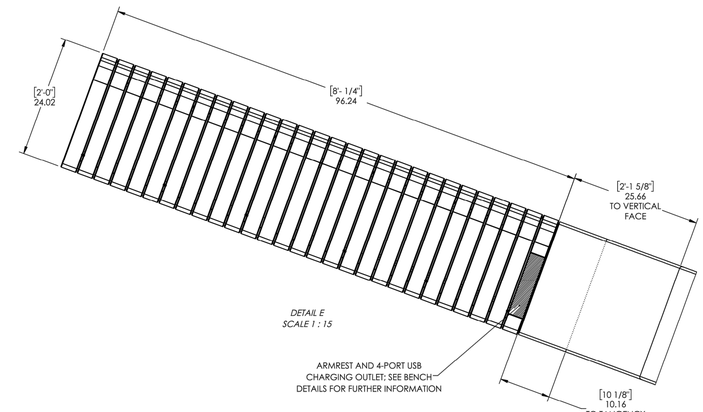

DETAIL E
SCALE 1 : 15

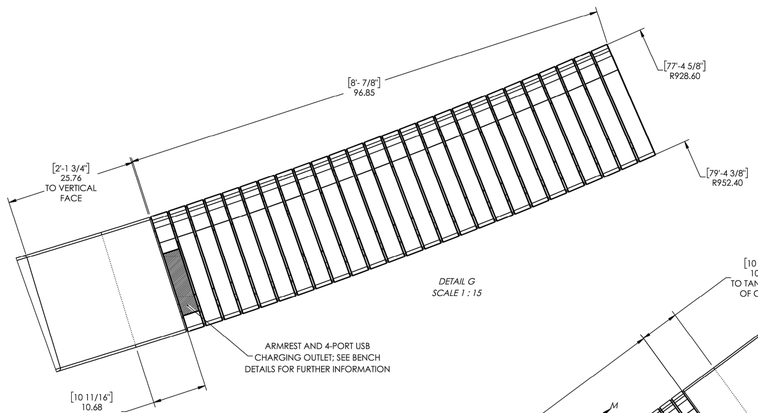

DETAIL G
SCALE 1 : 15

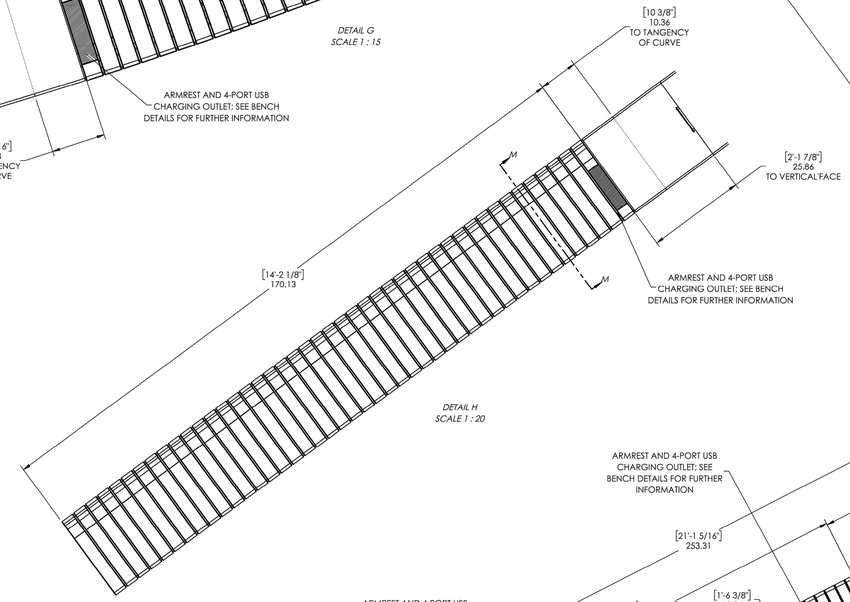

DETAIL H
SCALE 1 : 20

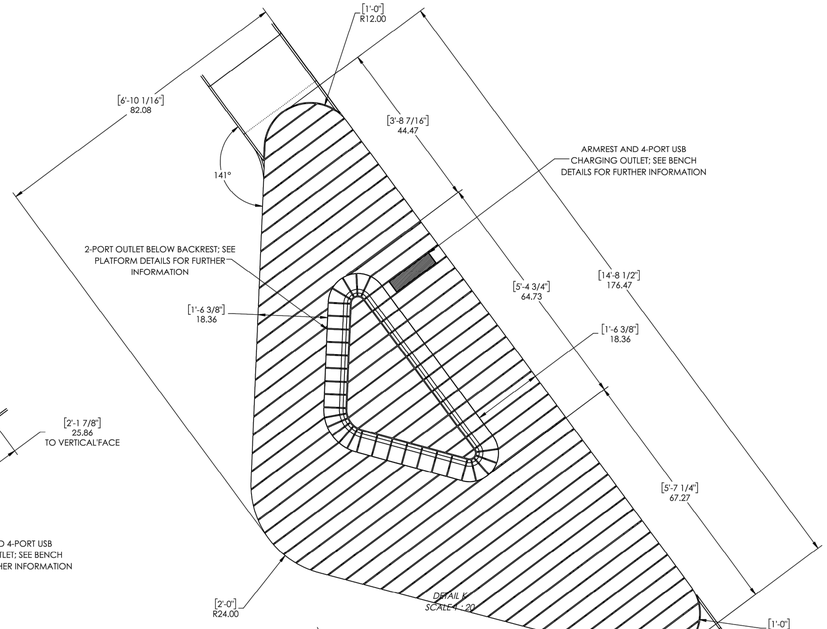

DETAIL K
SCALE 1 : 20

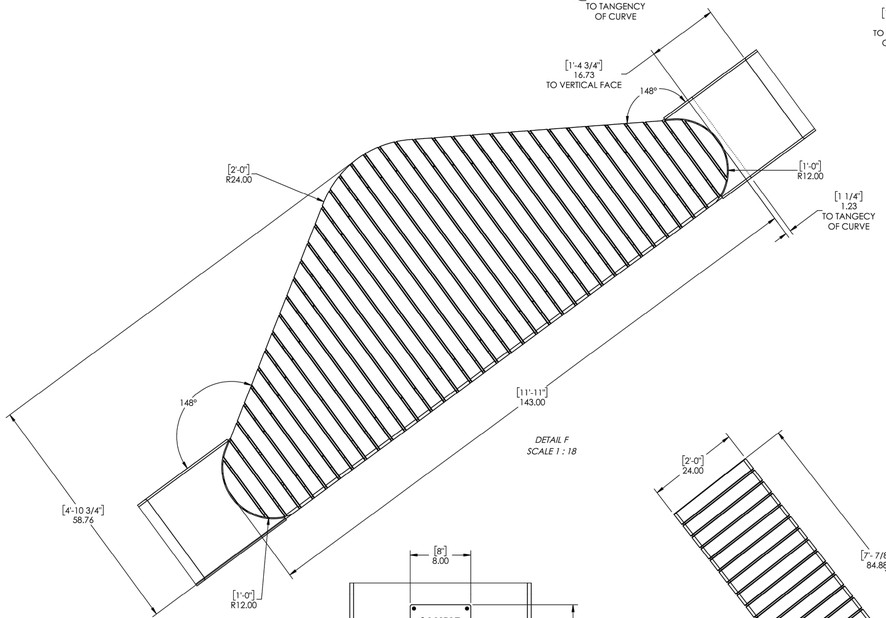

DETAIL F
SCALE 1 : 18

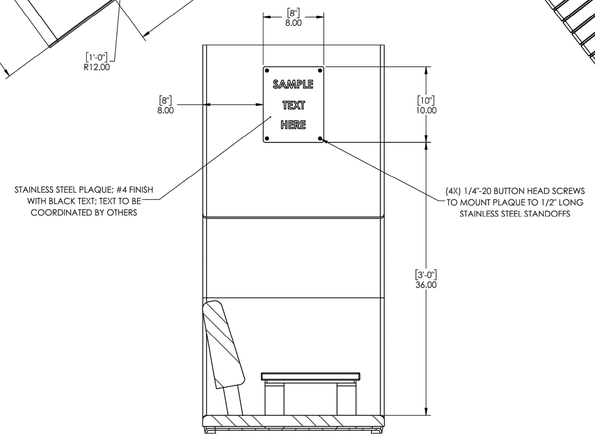

SECTION M-M
SCALE 1 : 10

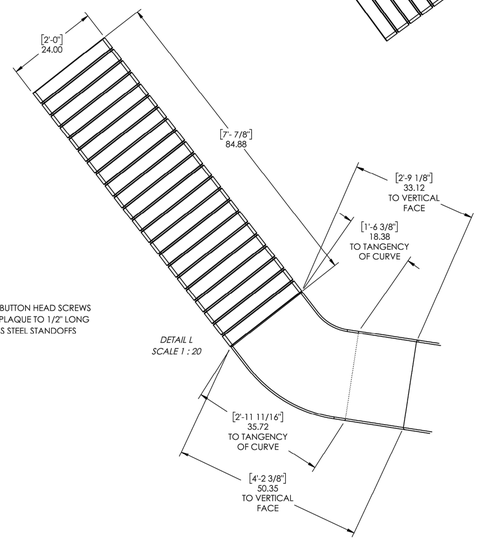

DETAIL L
SCALE 1 : 20

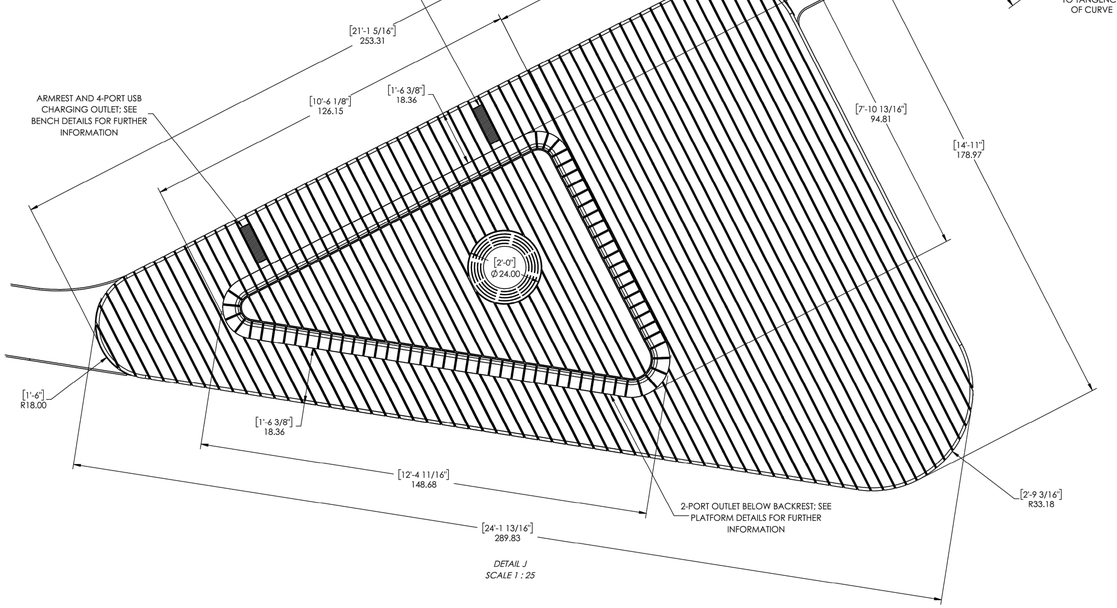

DETAIL J
SCALE 1 : 25

CONFORMED SET

HDR ENGINEERING, INC.
99 HIGH STREET, SUITE 2300
BOSTON, MASSACHUSETTS 02110–2378
(617) 357–7700

COMMONWEALTH OF MASSACHUSETTS
MARIO LOCOCO
CIVIL ENGINEER
NO. 53117
REGISTERED PROFESSIONAL ENGINEER
8/5/2022

Scale	AS SHOWN			
Date				
Job No.				
Designed by	BF			
Drawn by	BF	0	CONFORMED SET	8/5/2022
Checked by	ML	No.	Description	Date
Approved by	JW	REVISIONS		

THE WORKS — CAMBRIDGE DEPARTMENT OF PUBLIC WORKS

Client	CITY OF CAMBRIDGE, MA	Sheet	SC-1.10
Project	RIVER STREET INFRASTRUCTURE AND STREETSCAPE PROJECT	Total Sheets	381
Drawing	**RIBBON BENCH LAYOUT**	File No.	CNS

8/15/2022 2:44:20 PM
File: C:\PW\WORKING\EAST01\D2575331\SC-1.00 - RIBBON LAYOUT AND ELEVATION.DWG Plotted:

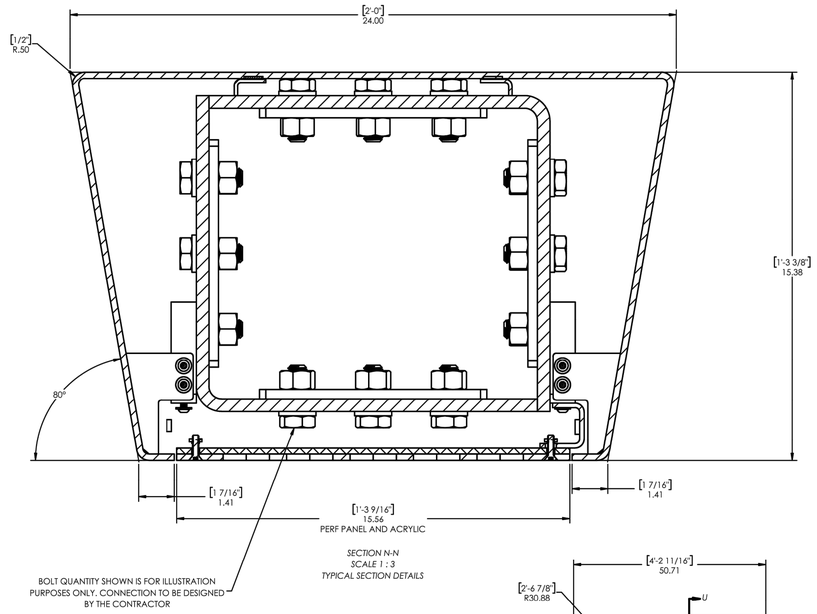

SECTION N-N
SCALE 1 : 3
TYPICAL SECTION DETAILS

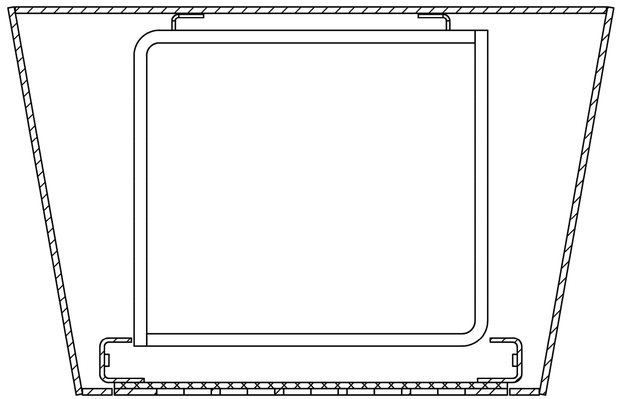

SECTION U-U
SCALE 1 : 3

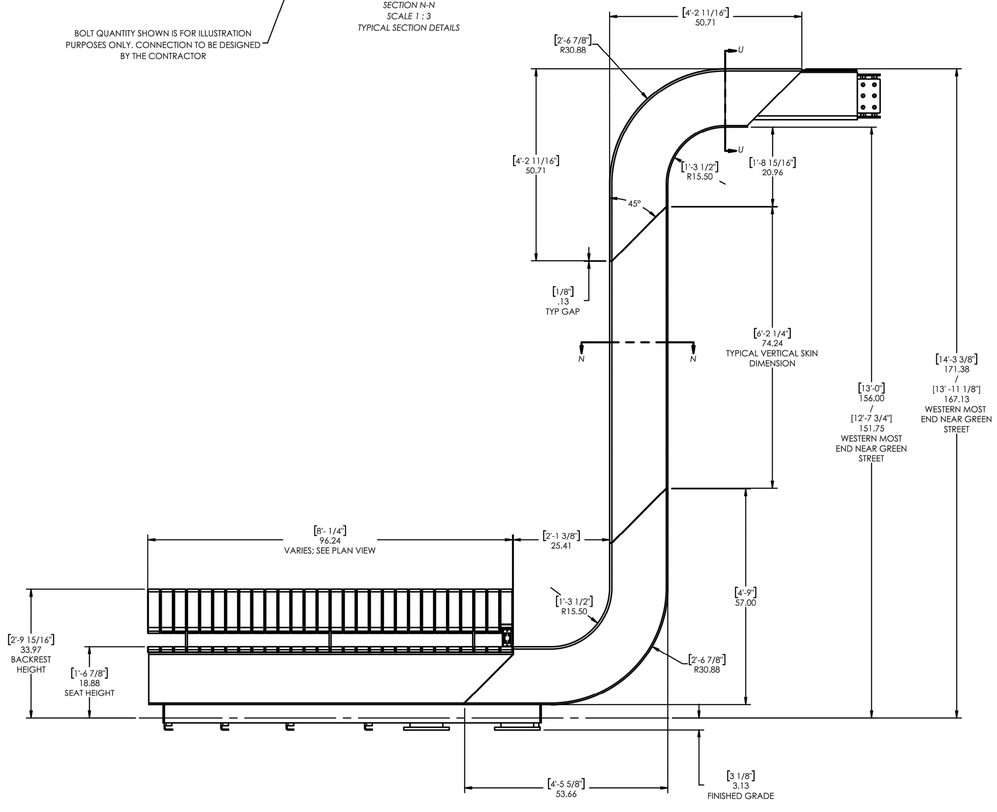

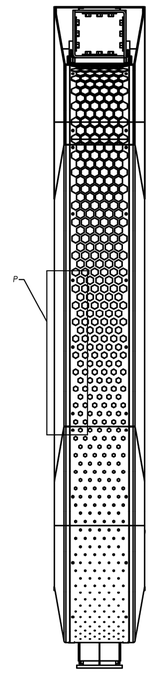

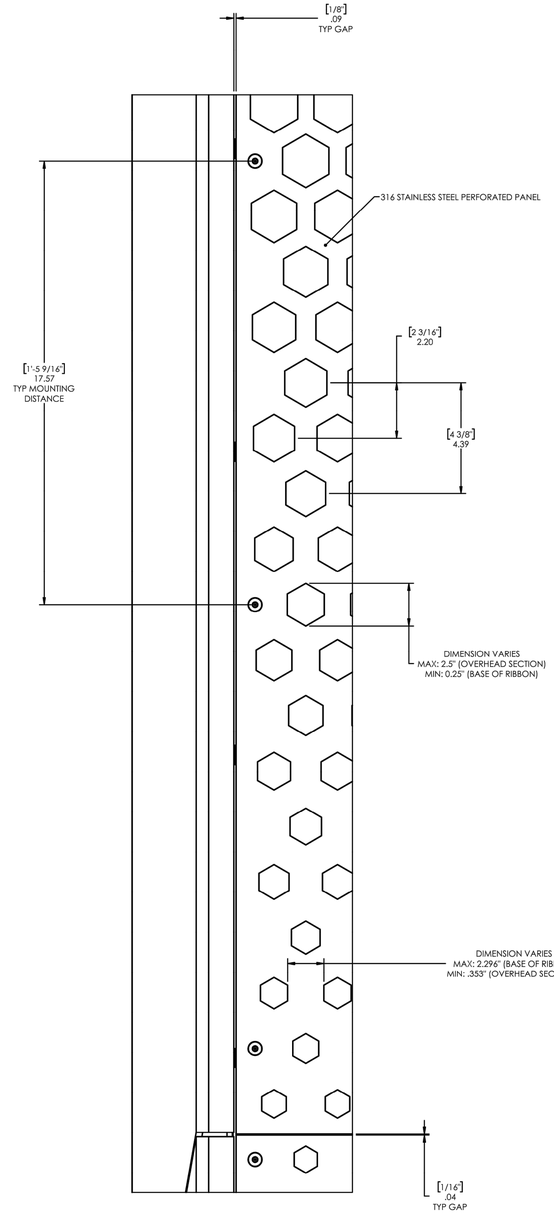

DETAIL P
SCALE 1 : 3

CONFORMED SET

HDR ENGINEERING, INC.
99 HIGH STREET, SUITE 2300
BOSTON, MASSACHUSETTS 02110–2378
(617) 357–7700

MARIO LOCOCO CIVIL ENGINEER NO. 53117 REGISTERED PROFESSIONAL ENGINEER COMMONWEALTH OF MASSACHUSETTS
6/5/2022

Scale	AS SHOWN			
Date				
Job No.				
Designed by	BF			
Drawn by	BF	0	CONFORMED SET	8/5/2022
Checked by	ML	No.	Description	Date
Approved by	JW	REVISIONS		

THE WORKS — CAMBRIDGE DEPARTMENT OF PUBLIC WORKS

Client	CITY OF CAMBRIDGE, MA	Sheet	SC-2.00
Project	RIVER STREET INFRASTRUCTURE AND STREETSCAPE PROJECT	Total Sheets	381
Drawing	**RIBBON DETAILS - 1**	File No.	CNS

File: C:\PW\WORKING\EAST01\D2575531\SC-1.00 - RIBBON LAYOUT AND ELEVATION.DWG Plotted: 8/15/2022 2:44:24 PM

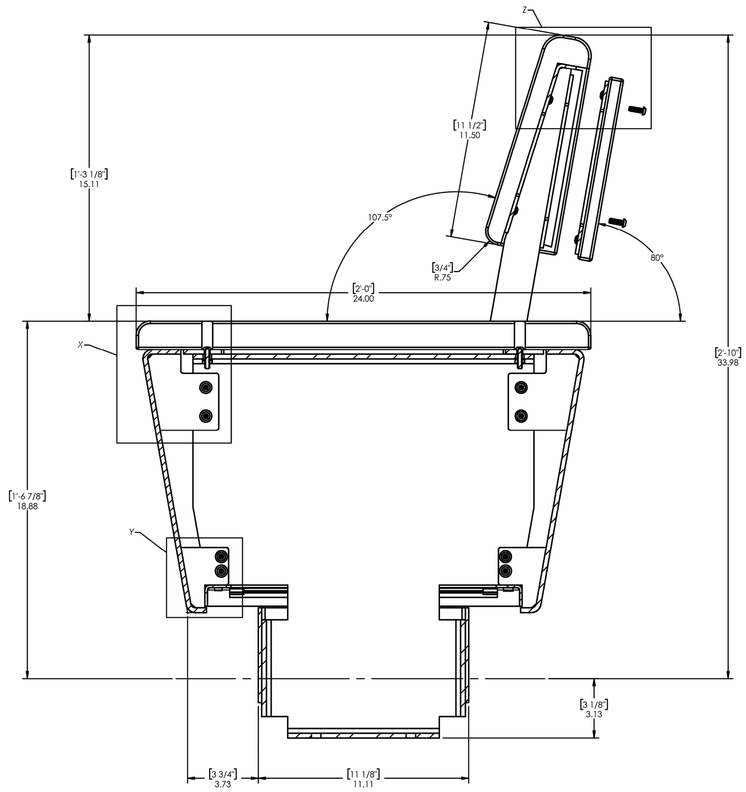

SECTION W-W
SCALE 1 : 4

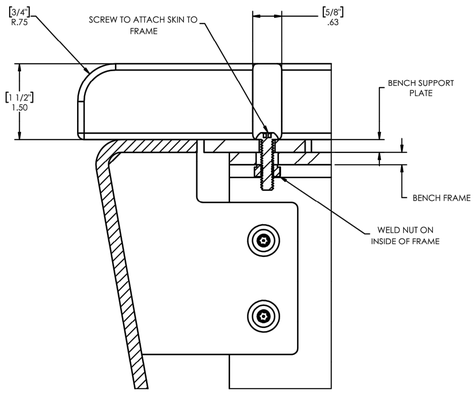

DETAIL X
SCALE 1 : 1.5

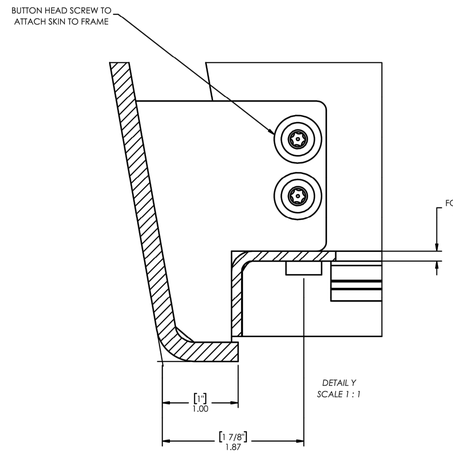

DETAIL Y
SCALE 1 : 1

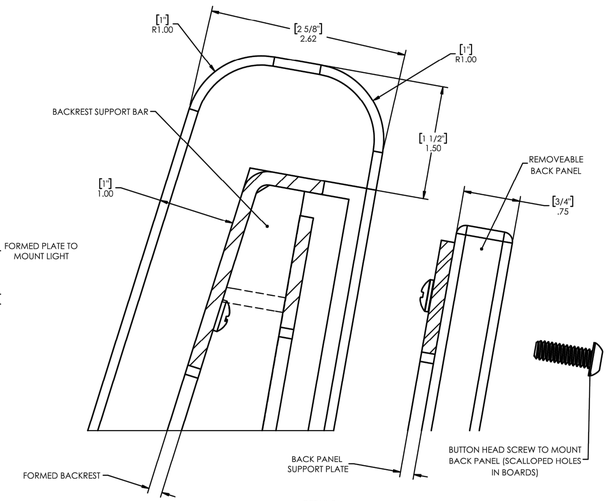

DETAIL Z
SCALE 1 : 1

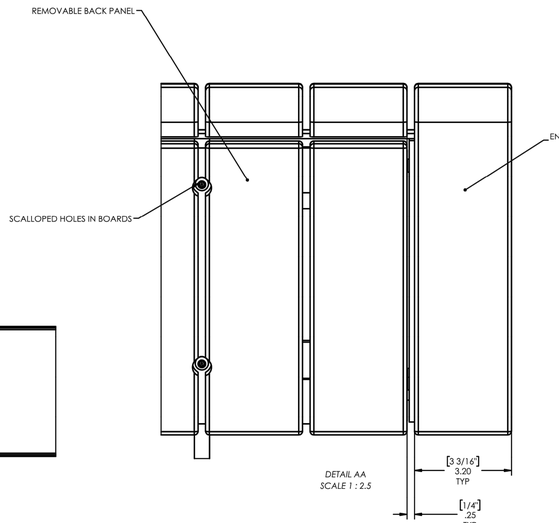

DETAIL AA
SCALE 1 : 2.5

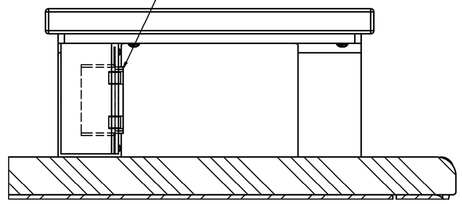

SECTION AB-AB
SCALE 1 : 3

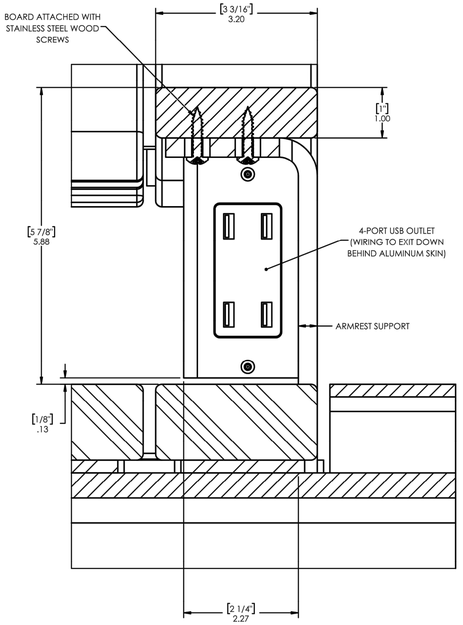

SECTION AC-AC
SCALE 1 : 1.5

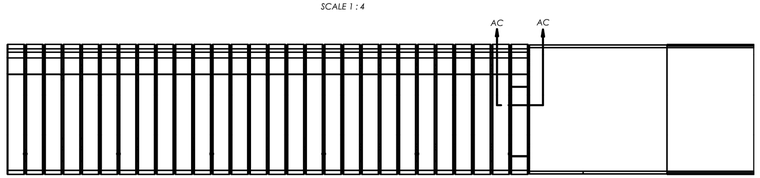

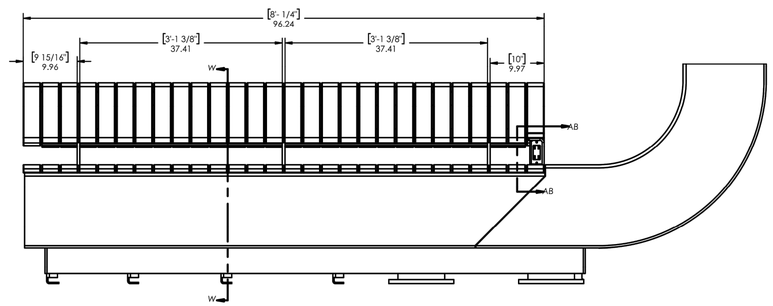

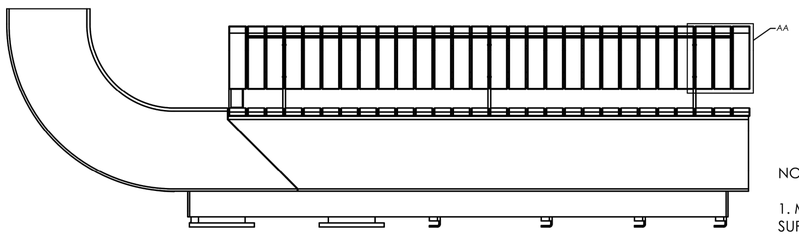

NOTES ON BENCH TOPPER:

1. MATERIALITY - SUB STRUCTURE (ALL NON-VISIBLE METAL) TO BE A36 POWDERCOATED STEEL, BACK REST SUPPORT BARS AND ARMREST METAL COMPONENTS TO BE 316 STAINLESS STEEL WITH ELECTROPOLISH AND BEAD BLAST FINISH, VISIBLE RECESSED PANEL AT FINISHED GRADE TO BE 316 STAINLESS STEEL, WOOD TO BE UNFINISHED IPE, SKIN PANELS TO BE 6061 ALUMINUM PER SPEC.

2. BACKREST SUPPORT SPACING, SIZING, AND DESIGN INTENT SHOWN TO BE THE SAME FOR ALL BENCH TOPPERS.

CONFORMED SET

HDR ENGINEERING, INC.
99 HIGH STREET, SUITE 2300
BOSTON, MASSACHUSETTS 02110–2378
(617) 357–7700

COMMONWEALTH OF MASSACHUSETTS
MARIO LOCOCO
CIVIL ENGINEER
NO. 53117
REGISTERED PROFESSIONAL ENGINEER
8/5/2022

Scale	AS SHOWN			
Date				
Job No.				
Designed by	BF			
Drawn by	BF	0	CONFORMED SET	8/5/2022
Checked by	ML	No.	Description	Date
Approved by	JW	REVISIONS		

THE CAMBRIDGE DEPARTMENT OF PUBLIC WORKS

Client	CITY OF CAMBRIDGE, MA	Sheet	SC-2.10
Project	RIVER STREET INFRASTRUCTURE AND STREETSCAPE PROJECT	Total Sheets	381
Drawing	**RIBBON DETAILS - 2**	File No.	CNS

File: C:\PW\WORKING\EAST01\D2575531\SC-1.00 - RIBBON LAYOUT AND ELEVATION.DWG Plotted: 8/15/2022 2:44:28 PM

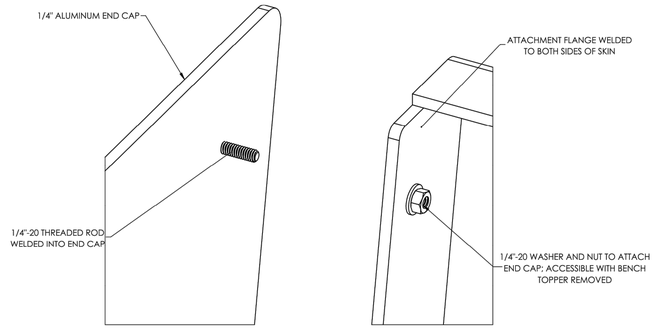

DETAIL AD
SCALE 1 : 1.5

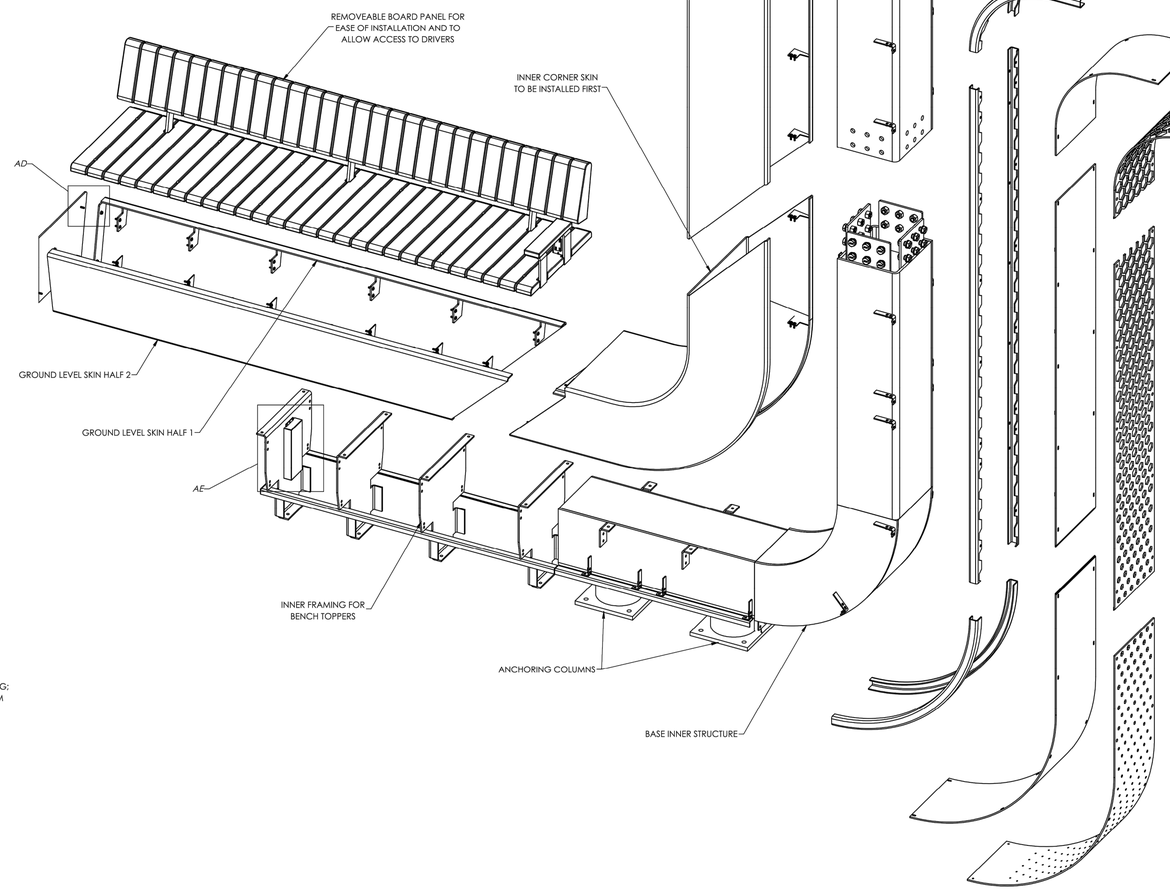

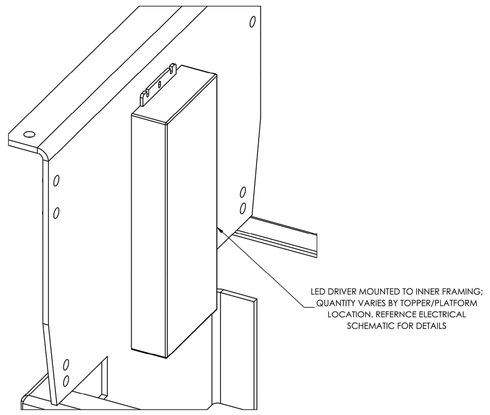

DETAIL AE
SCALE 1 : 3

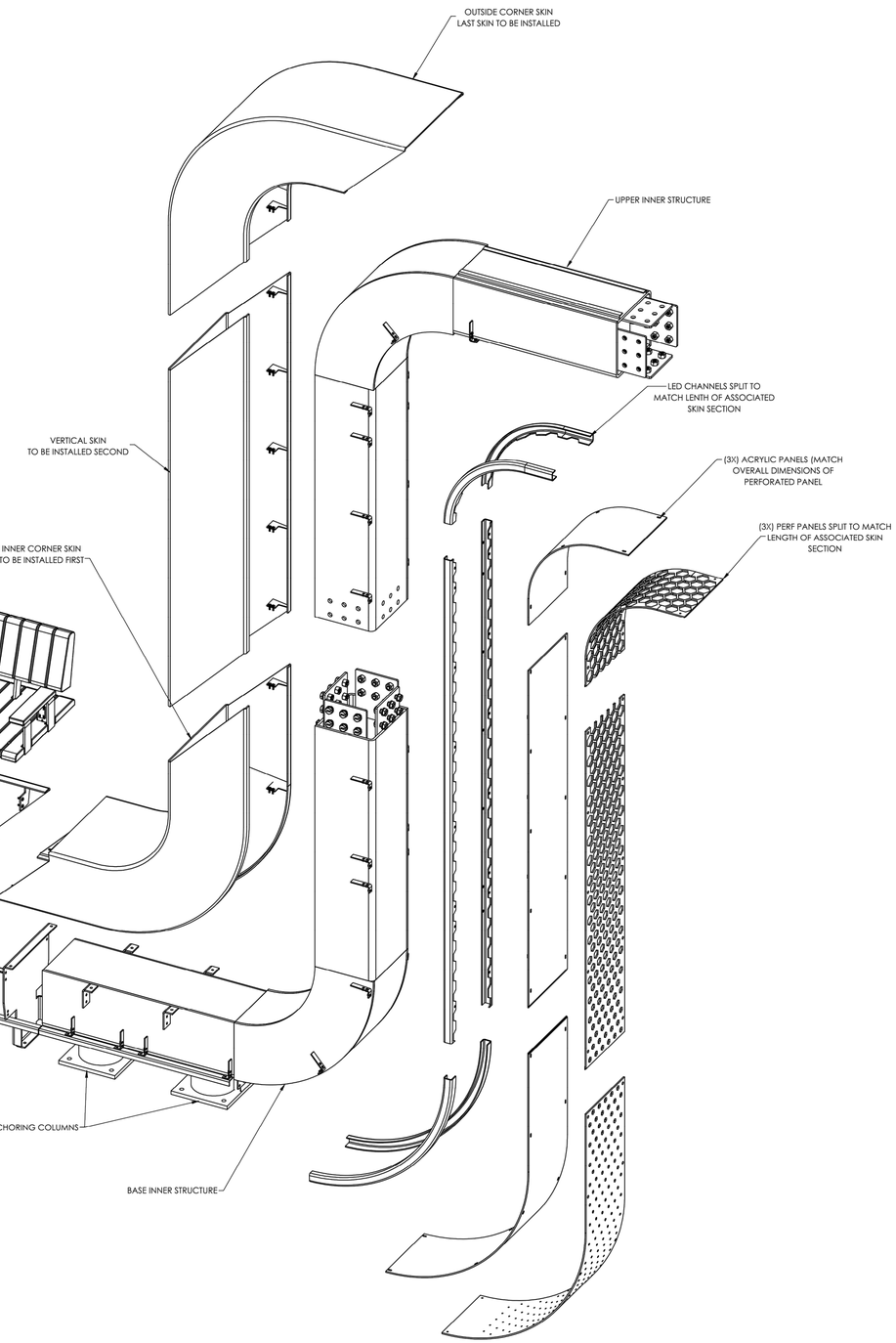

File: C:\PW\WORKING\EAST01\D2575531\SC-1.00 - RIBBON LAYOUT AND ELEVATION.DWG Plotted: 8/15/2022 2:44:32 PM

CONFORMED SET

HDR ENGINEERING, INC.
99 HIGH STREET, SUITE 2300
BOSTON, MASSACHUSETTS 02110-2378
(617) 357-7700

COMMONWEALTH OF MASSACHUSETTS
MARIO LOCICO
CIVIL ENGINEER
NO. 53117
REGISTERED PROFESSIONAL ENGINEER
8/5/2022

Scale	AS SHOWN			
Date				
Job No.				
Designed by	BF			
Drawn by	BF	0	CONFORMED SET	8/5/2022
Checked by	ML	No.	Description	Date
Approved by	JW	REVISIONS		

THE WORKS — CAMBRIDGE DEPARTMENT OF PUBLIC

Client	CITY OF CAMBRIDGE, MA	Sheet	SC-2.20
Project	RIVER STREET INFRASTRUCTURE AND STREETSCAPE PROJECT	Total Sheets	381
Drawing	**RIBBON DETAILS - 3**	File No.	CNS

NOTES:

1. INNER STRUCTURE TO BE SPLIT AT MIDWAY POINT OF VERTICAL SECTIONS AND AT MIDWAY POINT OF HORIZTONAL RUNS IN OVERHEAD SECTIONS TO BE FIELD ASSEMBLED

2. ANCHORING DETAIL BELOW IS THE SAME AT ALL LOCATIONS WHERE INNER STRUCTURE MEETS FINISHED GRADE

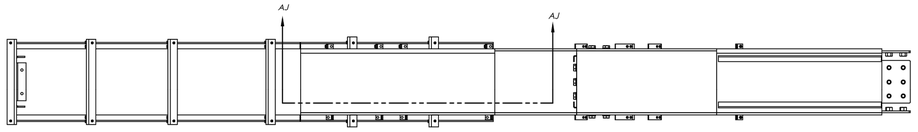

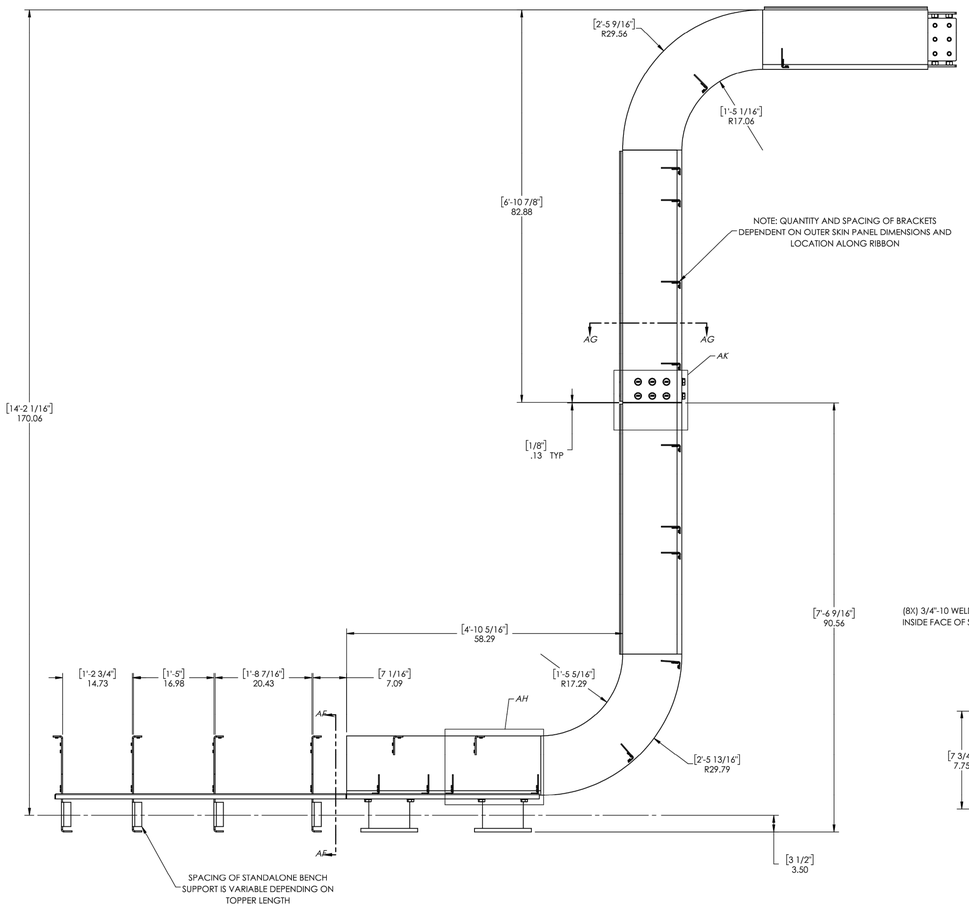

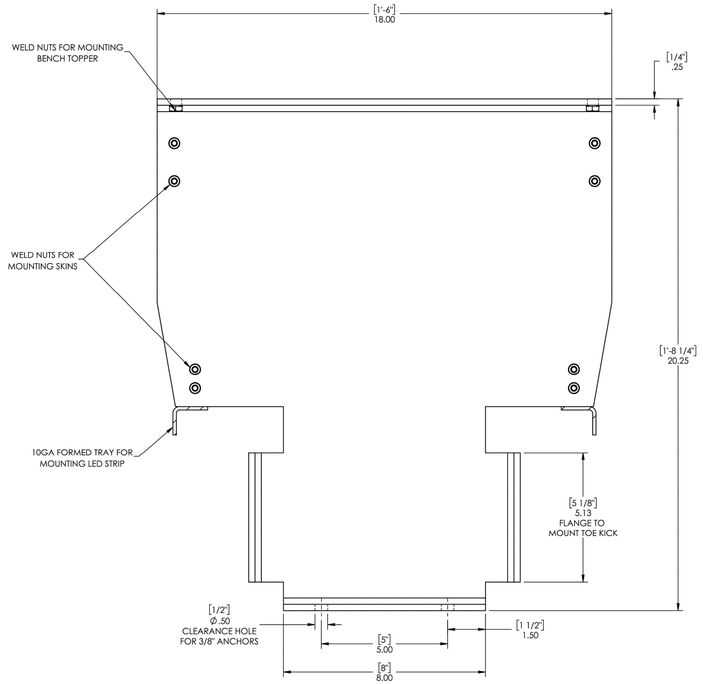

SECTION AF-AF
SCALE 1 : 3

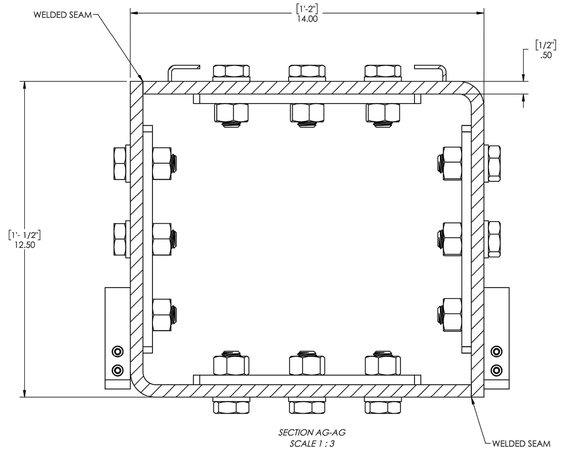

SECTION AG-AG
SCALE 1 : 3

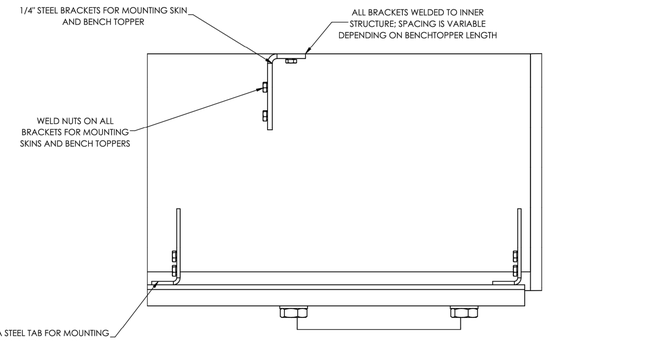

DETAIL AH
SCALE 1 : 4

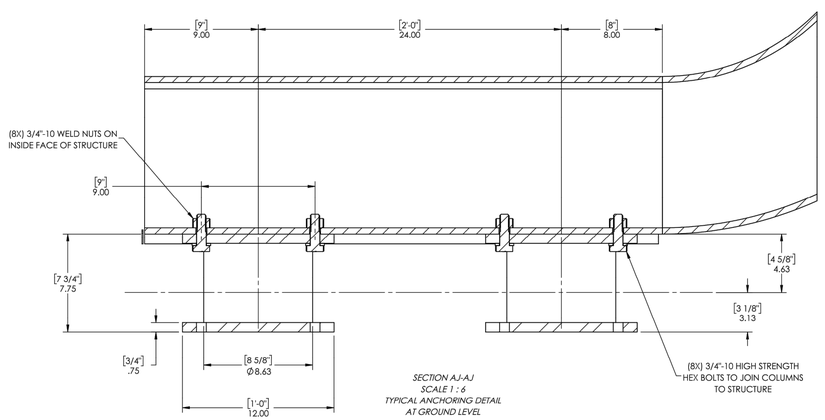

SECTION AJ-AJ
SCALE 1 : 6
TYPICAL ANCHORING DETAIL AT GROUND LEVEL

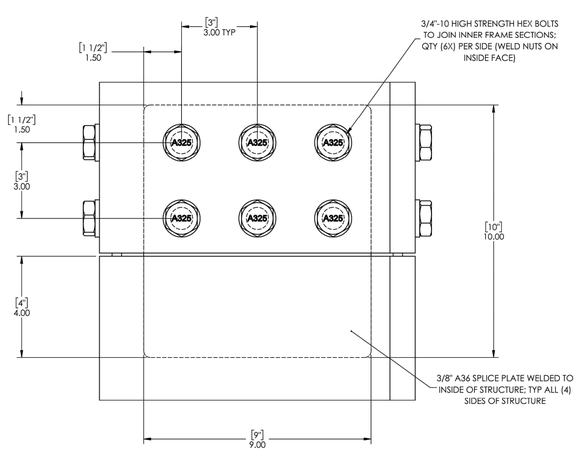

DETAIL AK
SCALE 1 : 3

CONFORMED SET

HDR ENGINEERING, INC.
99 HIGH STREET, SUITE 2300
BOSTON, MASSACHUSETTS 02110–2378
(617) 357–7700

COMMONWEALTH OF MASSACHUSETTS
MARIO LOCOCO
CIVIL ENGINEER
NO. 53117
REGISTERED
PROFESSIONAL ENGINEER
8/5/2022

Scale	AS SHOWN			
Date				
Job No.				
Designed by	BF			
Drawn by	BF	0	CONFORMED SET	8/5/2022
Checked by	ML	No.	Description	Date
Approved by	JW	REVISIONS		

THE WORKS
CAMBRIDGE DEPARTMENT OF PUBLIC WORKS

Client	CITY OF CAMBRIDGE, MA	Sheet	SC-2.30
Project	RIVER STREET INFRASTRUCTURE AND STREETSCAPE PROJECT	Total Sheets	381
Drawing	**RIBBON DETAILS - 4**	File No.	CNS

File: C:\PW\WORKING\EAST01\D2575531\SC-1.00 - RIBBON LAYOUT AND ELEVATION.DWG Plotted: 8/15/2022 2:44:35 PM

NOTES ON PLATFORMS:

1. MATERIALITY - INNER STRUCTURE (ALL NON-VISIBLE METAL) TO BE A36 POWDERCOATED STEEL, BASE SUPPORT TUBES TO BE A500 GRADE B STRUCTURAL STEEL TUBING, VISIBLE RECESSED COVER PANEL AT FINISHED GRADE AND BENEATH BACKREST TO BE 316 STAINLESS STEEL, OUTLET ACCESS PANEL TO BE 316 STAINLESS STEEL, WOOD TO BE UNFINISHED IPE, SKIN PANELS TO BE 6061 ALUMINUM PER SPEC.

2. FRAMING SPACING, SIZING, AND DESIGN INTENT SHOWN TO BE THE SAME FOR ALL THREE PLATFORMS.

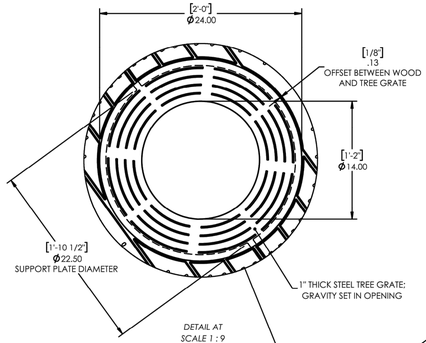

DETAIL AT
SCALE 1 : 9

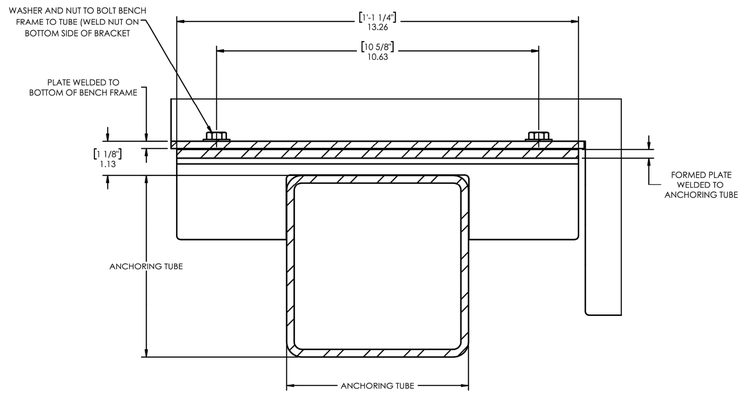

DETAIL AR
SCALE 2 : 5

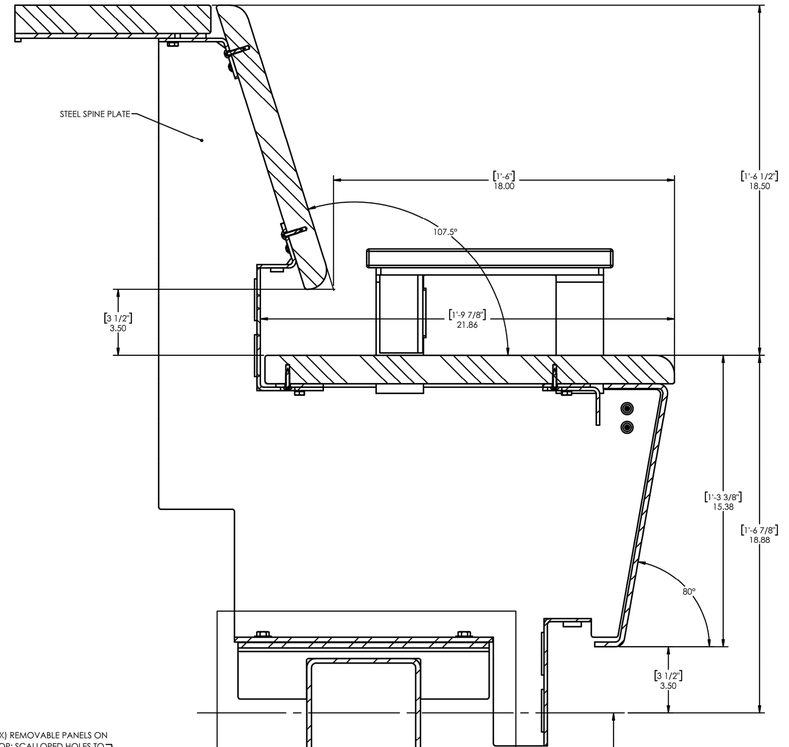

SECTION AS-AS
SCALE 1 : 4

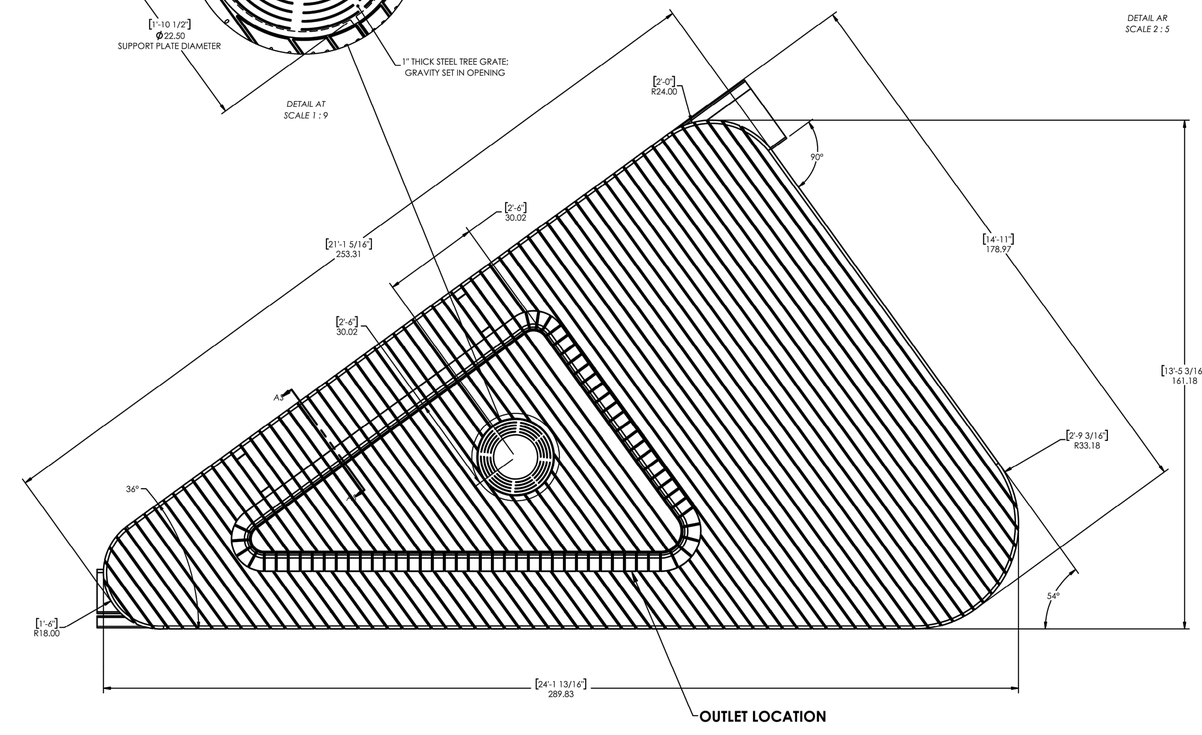

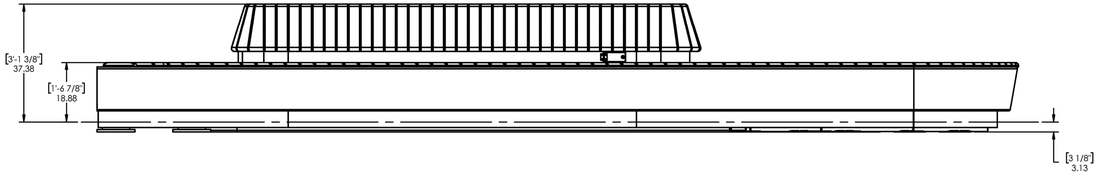

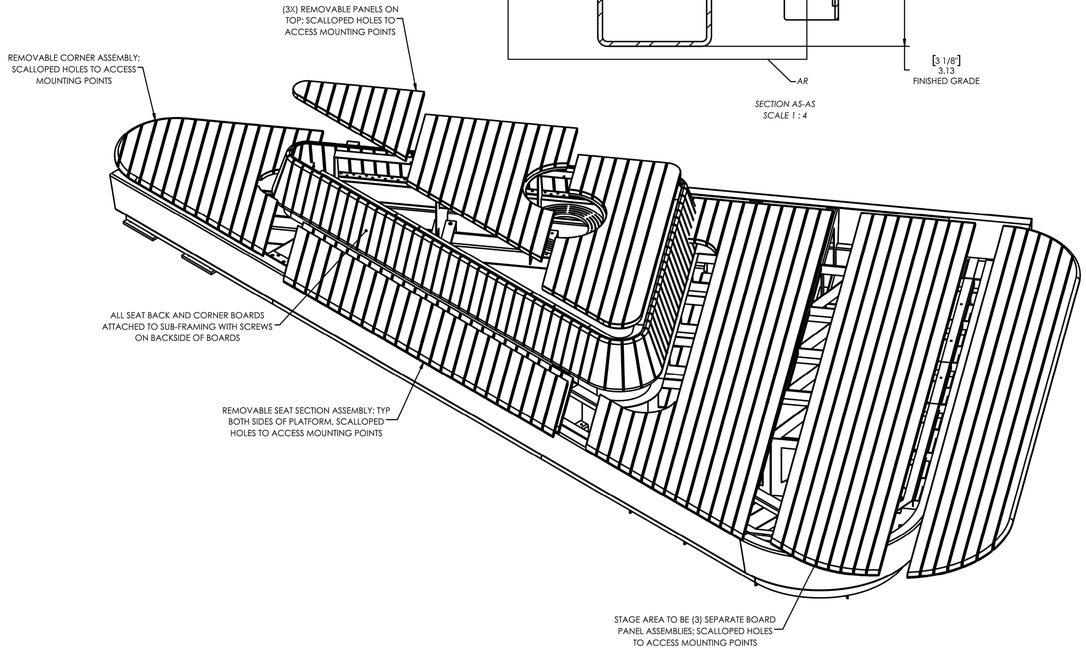

CONFORMED SET

HDR ENGINEERING, INC.
99 HIGH STREET, SUITE 2300
BOSTON, MASSACHUSETTS 02110–2378
(617) 357–7700

MARIO LOCOCO
CIVIL ENGINEER
NO. 52117
REGISTERED
PROFESSIONAL ENGINEER
COMMONWEALTH OF MASSACHUSETTS
8/5/2022

Scale	AS SHOWN			
Date				
Job No.				
Designed by	BF			
Drawn by	BF	0	CONFORMED SET	8/5/2022
Checked by	ML	No.	Description	Date
Approved by	JW	REVISIONS		

THE WORKS — CAMBRIDGE DEPARTMENT OF PUBLIC

Client	CITY OF CAMBRIDGE, MA	Sheet	SC-3.00
Project	RIVER STREET INFRASTRUCTURE AND STREETSCAPE PROJECT	Total Sheets	381
Drawing	**RIBBON - STAGE**	File No.	CNS

File: C:\PW\WORKING\EAST01\D2575531\SC-1.00 - RIBBON LAYOUT AND ELEVATION.DWG Plotted: 8/15/2022 2:44:40 PM

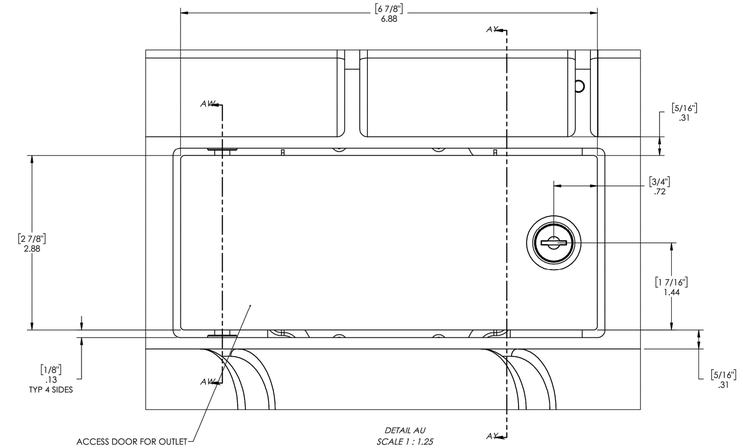

DETAIL AU
SCALE 1 : 1.25

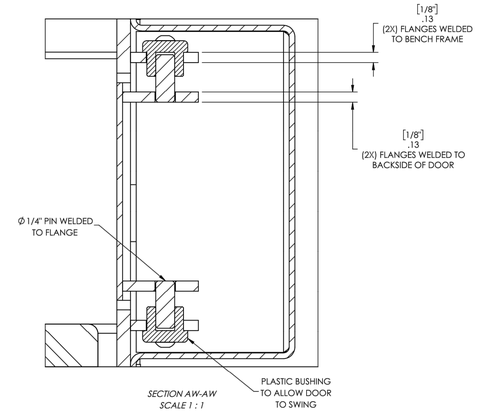

SECTION AW-AW
SCALE 1 : 1

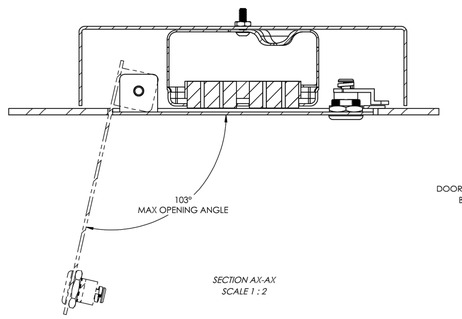

SECTION AX-AX
SCALE 1 : 2

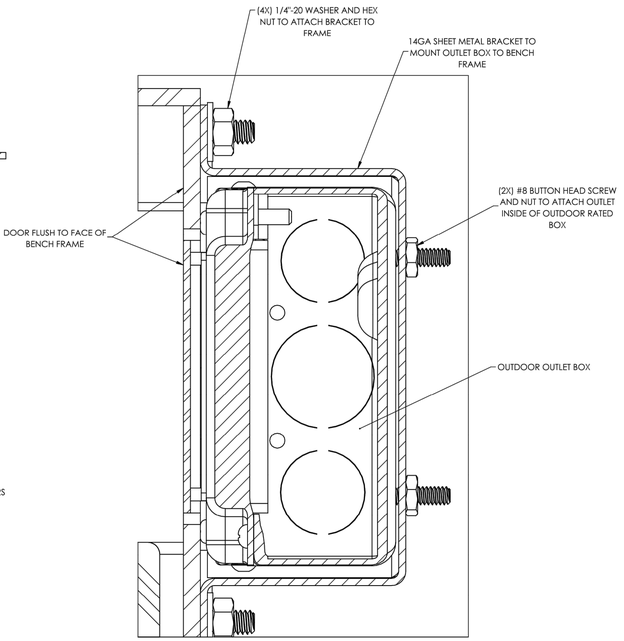

SECTION AY-AY
SCALE 1.25 : 1

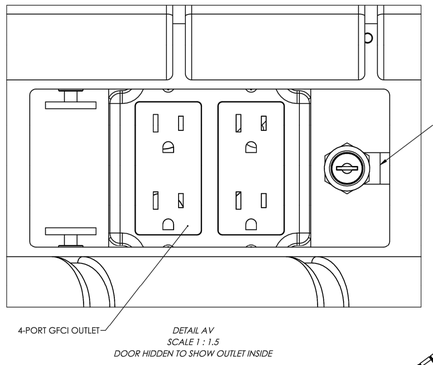

DETAIL AV
SCALE 1 : 1.5
DOOR HIDDEN TO SHOW OUTLET INSIDE

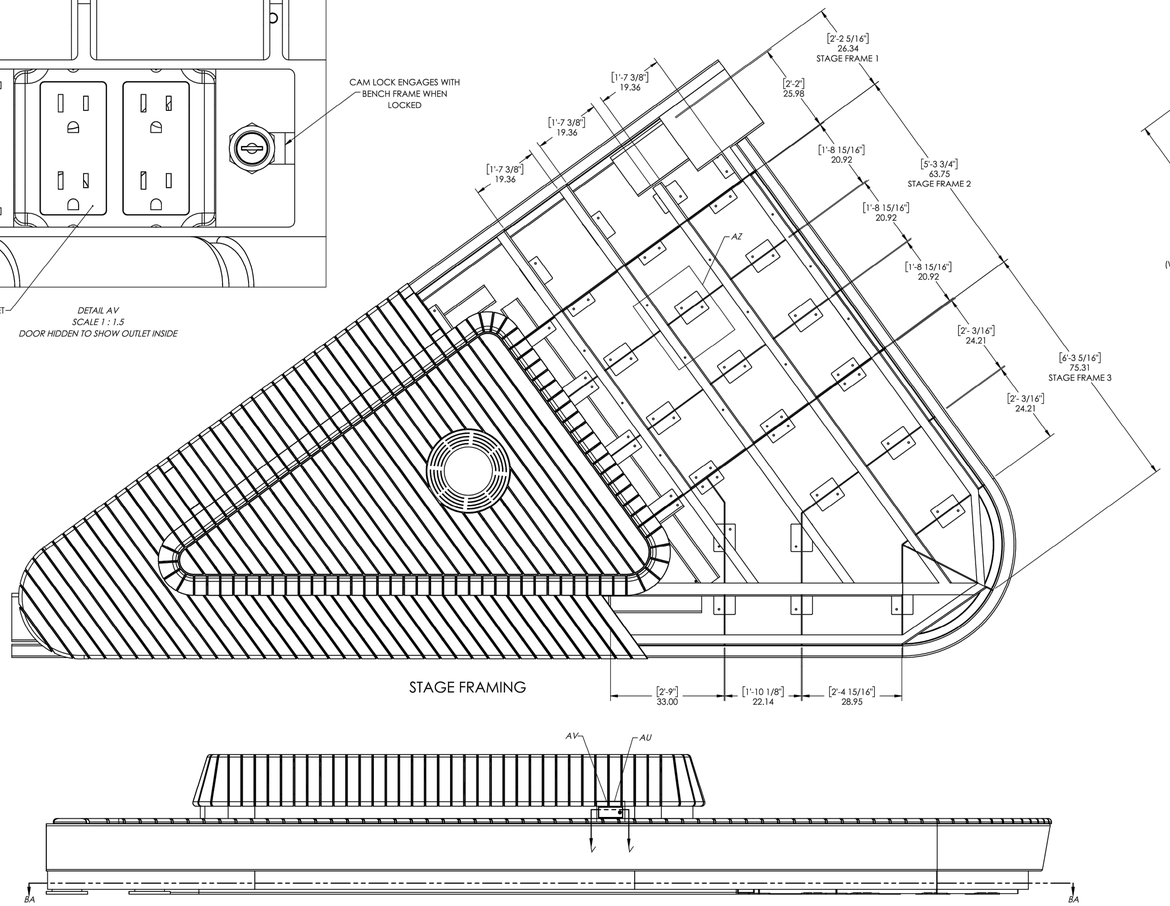

STAGE FRAMING

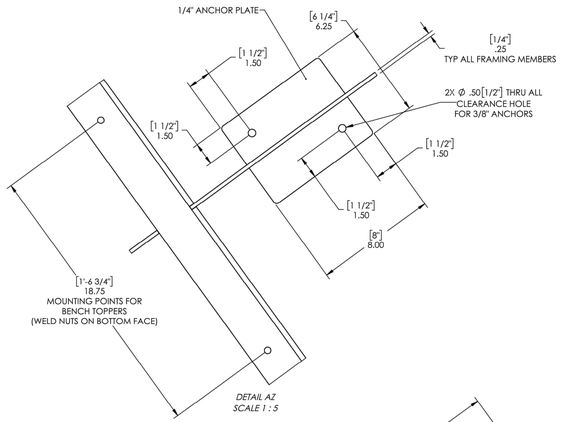

DETAIL AZ
SCALE 1 : 5

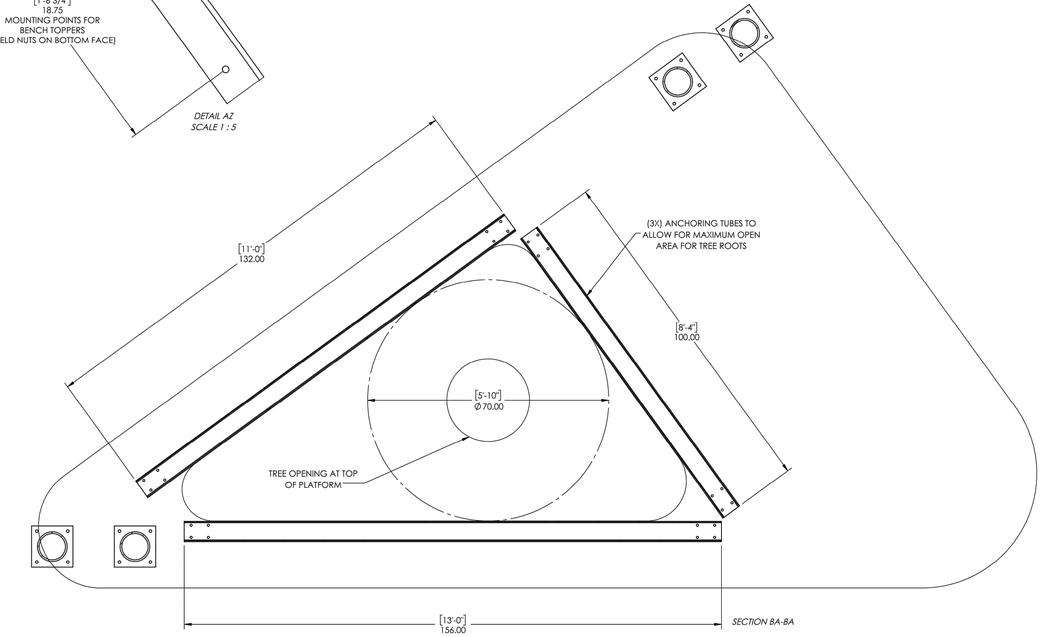

SECTION BA-BA

CONFORMED SET

HDR ENGINEERING, INC.
99 HIGH STREET, SUITE 2300
BOSTON, MASSACHUSETTS 02110–2378
(617) 357–7700

COMMONWEALTH OF MASSACHUSETTS
MARIO LOCOCO
CIVIL ENGINEER
NO. 53117
REGISTERED PROFESSIONAL ENGINEER
8/5/2022

Scale	AS SHOWN			
Date				
Job No.				
Designed by	BF			
Drawn by	BF	0	CONFORMED SET	8/5/2022
Checked by	ML	No.	Description	Date
Approved by	JW	REVISIONS		

THE WORKS
CAMBRIDGE DEPARTMENT OF PUBLIC WORKS

Client	CITY OF CAMBRIDGE, MA	Sheet	SC-3.10
Project	RIVER STREET INFRASTRUCTURE AND STREETSCAPE PROJECT	Total Sheets	381
Drawing	**RIBBON - STAGE SUPPORT**	File No.	CNS

File: C:\PW\WORKING\EAST01\D2575531\SC-1.00 - RIBBON LAYOUT AND ELEVATION.DWG Plotted: 8/15/2022 2:44:45 PM

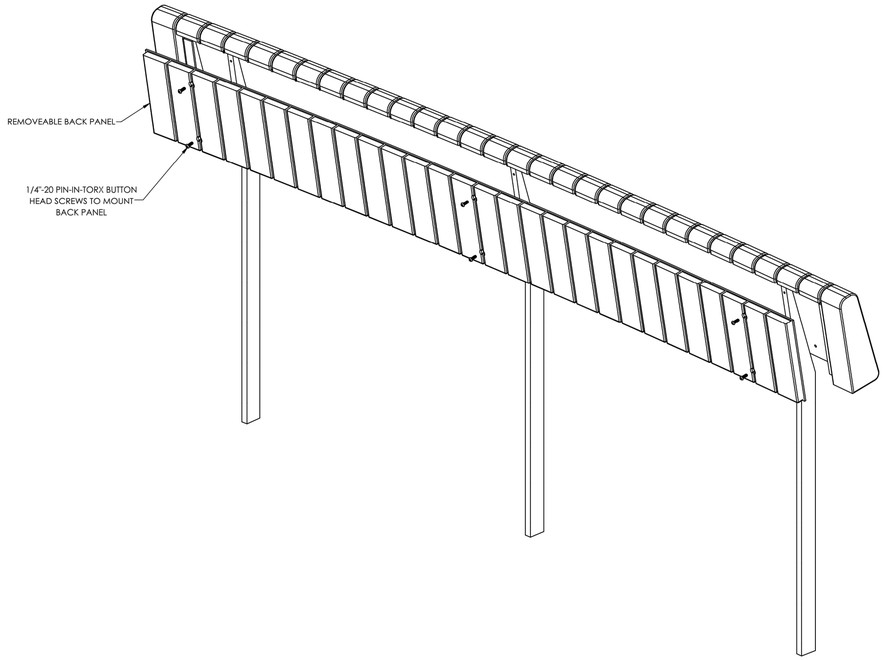

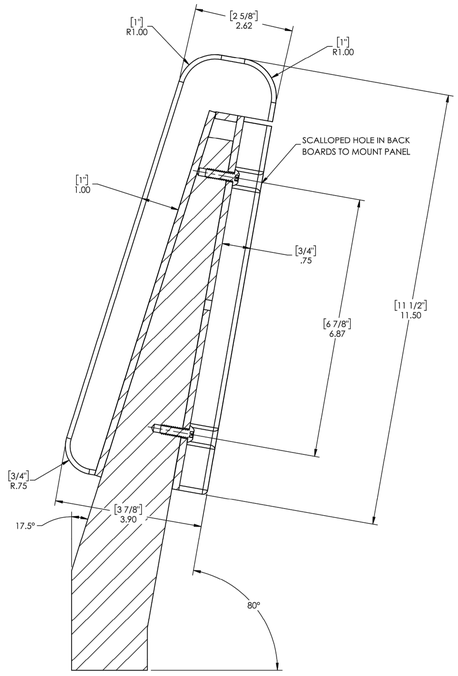

SECTION BB-BB
SCALE 1 : 2

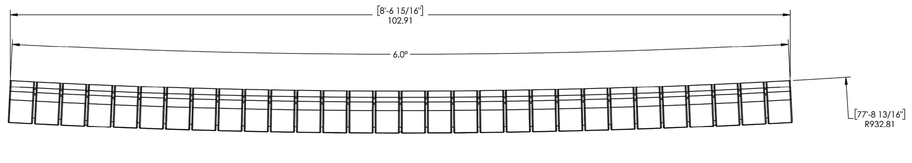

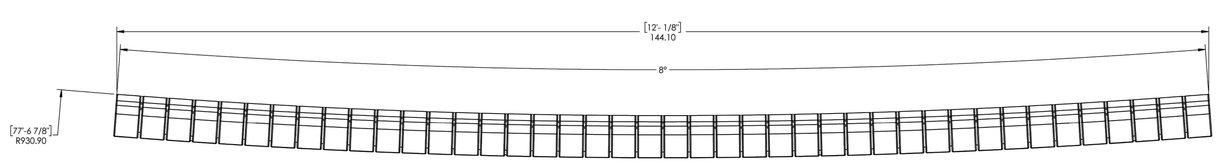

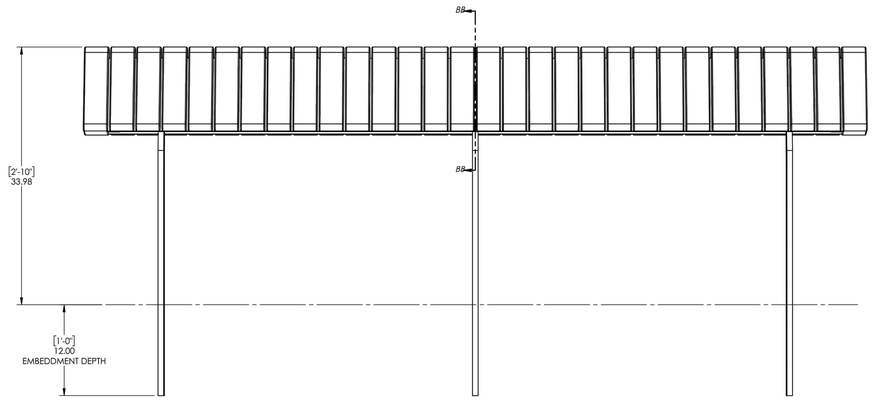

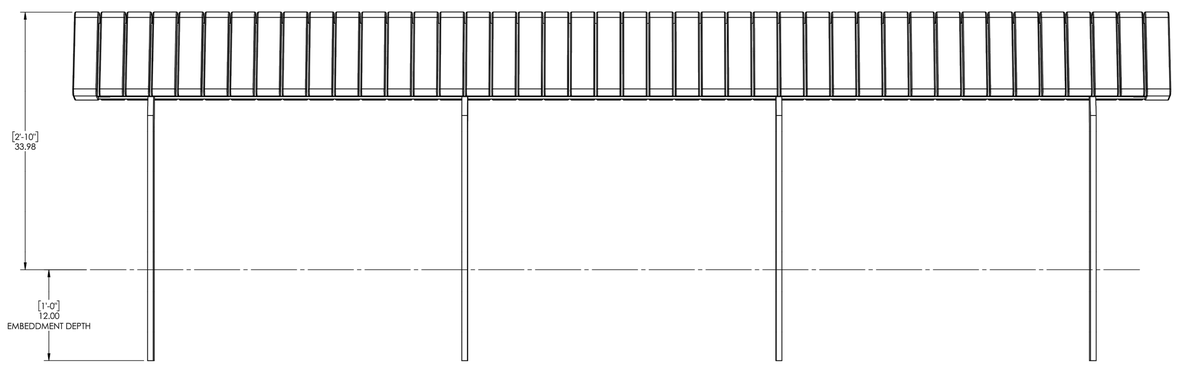

CONFORMED SET

HDR ENGINEERING, INC.
99 HIGH STREET, SUITE 2300
BOSTON, MASSACHUSETTS 02110-2378
(617) 357-7700

MARIO LOCOCO CIVIL ENGINEER NO. 52117 REGISTERED PROFESSIONAL ENGINEER
COMMONWEALTH OF MASSACHUSETTS
8/5/2022

Scale	AS SHOWN			
Date				
Job No.				
Designed by	BF			
Drawn by	BF	0	CONFORMED SET	8/5/2022
Checked by	ML	No.	Description	Date
Approved by	JW	REVISIONS		

CAMBRIDGE DEPARTMENT OF PUBLIC THE WORKS

Client	CITY OF CAMBRIDGE, MA	Sheet	SC-4.00
Project	RIVER STREET INFRASTRUCTURE AND STREETSCAPE PROJECT	Total Sheets	381
Drawing	**BIKE LANE SEPARATOR**	File No.	CNS

8/15/2022 2:44:48 PM
File: C:\PW\WORKING\EAST01\D2575531\SC-1.00 - RIBBON LAYOUT AND ELEVATION.DWG Plotted:

ITEM NO.	DESCRIPTION	TOTAL QTY	LOCATIONS	GENERAL ORDERING NUMBER	REFERENCE DRAWING SET VIEWS
1	OUTDOOR RATED, 4-PORT, USB CHARGING OUTLET	5	QTY 1 AT THE ENDS OF EACH BENCH TOPPER, QTY 1 ON THE BACKSIDE OF THE LARGE PLATFORM, AND QTY 1 ON THE BACKSIDE OF THE SMALL BACKED PLATFORM	OFF-THE-SHELF COMPONENT	SECTION 'AB-AB', SECTION 'AC-AC'
2	OUTDOOR RATED, 2-PORT, GFCI OUTLET	2	QTY 1 ON THE FRONT SIDE OF THE LARGE PLATFORM AND QTY 1 ON THE FRONT SIDE OF THE SMALL BACKED PLATFORM	OFF-THE-SHELF COMPONENT	DETAIL 'AU', DETAIL 'AV', SECTION 'AW', SECTION 'AX', SECTION 'AY'
3	300W, Q-TRAN QOM-eLED+DMX DRIVER	9	QTY 1 BENEATH BENCH TOPPERS 1, 2, 3, AND 4; QTY 2 BENEATH BACKLESS PLATFORM; QTY 2 BENEATH THE LARGE BACKED PLATFORM; QTY 3 BENEATH THE SMALL BACKED PLATFORM	QOM-eLED+DMX-300W-UNV-24VDC-DMX-BK	DETAIL 'AE'
4	200W, Q-TRAN QOM-eLED+DMX DRIVER	7	QTY 1 BENEATH BENCH TOPPER 3; QTY 5 BENEATH THE LARGE BACKED PLATFORM AND QTY 1 BENEATH THE BACKLESS PLATFORM	QOM-eLED+DMX-200W-UNV-24VDC-DMX-BK	DETAIL 'AE'
5	Q-TRAN RGBW-HE24/4.0 FIXTURE	QTY 55 VARIABLE LENGTH STRIPS	TYPICAL BENEATH BENCH TOPPERS, BENEATH PLATFORMS, BENEATH PLATFORM BACKS, AND ALL LOCATIONS WITHIN STRUCTURE	RGBW-HE24/4.0-WET-RGBW-35-BW-BW-BK-N/A-VARIES (WIRE TYPE VARIES BASED ON LOCATION TO ENSURE PROPER CONNECTORS AS PRESENT)	DETAIL 'R', DETAIL 'Y', DETAIL 'AL', DETAIL 'AP'

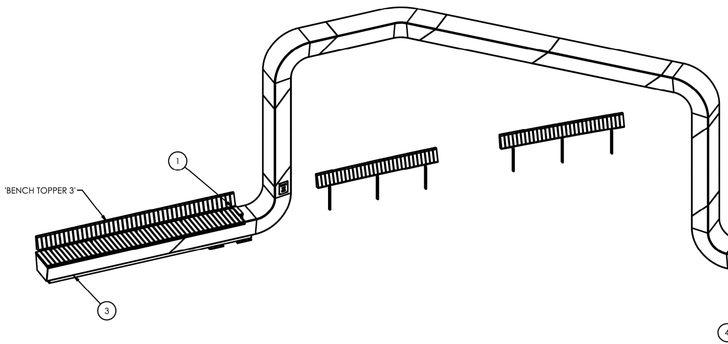

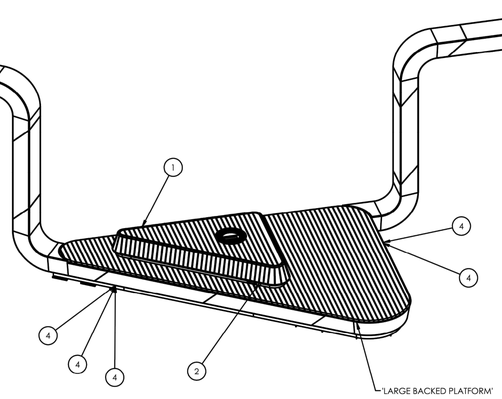

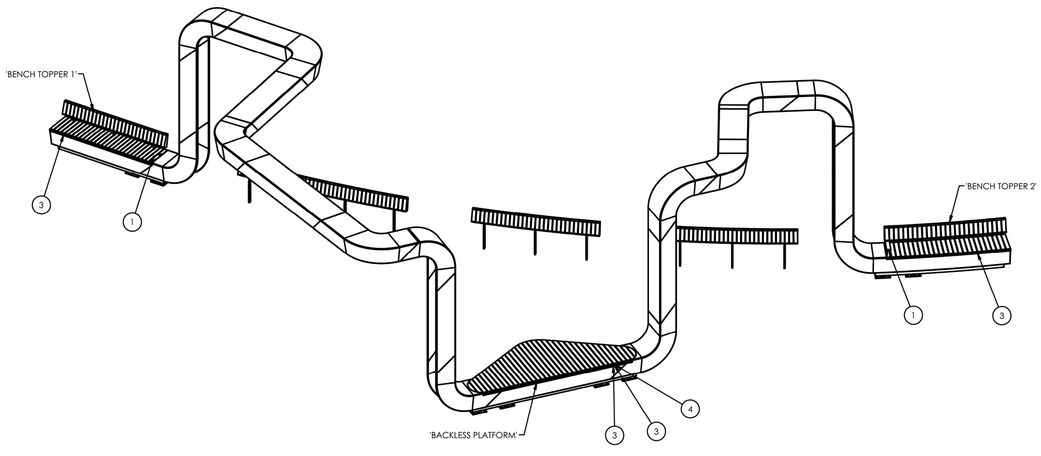

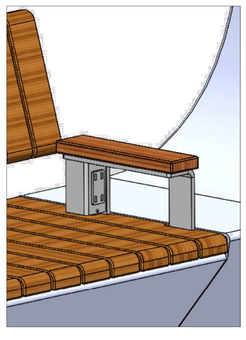

TYPICAL ARMREST OUTLET DETAIL; SEE ITEM (1)

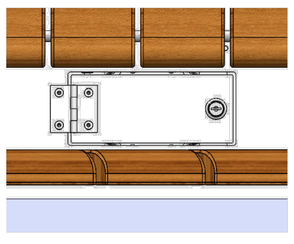

TYPICAL BACKED PLATFORM OUTLET DETAIL WITH DOOR CLOSED; SEE ITEM (2)

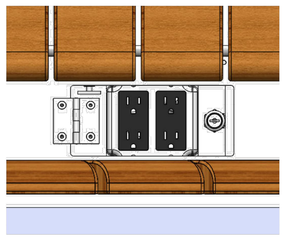

TYPICAL BACKED PLATFORM OUTLET DETAIL WITH DOOR REMOVED; SEE ITEM (2)

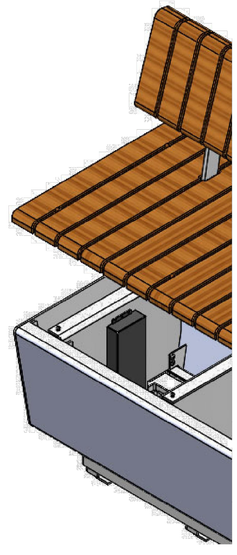

DRIVER ACCESS BENEATH BENCH TOPPERS; TYPICAL FOR ALL TOPPERS

CONFORMED SET

HDR ENGINEERING, INC.
99 HIGH STREET, SUITE 2300
BOSTON, MASSACHUSETTS 02110–2378
(617) 357–7700

COMMONWEALTH OF MASSACHUSETTS
MARIO LOCICERO
CIVIL ENGINEER
NO. 53117
REGISTERED PROFESSIONAL ENGINEER
8/5/2022

Scale	AS SHOWN			
Date				
Job No.				
Designed by	BF			
Drawn by	BF	0	CONFORMED SET	8/5/2022
Checked by	ML	No.	Description	Date
Approved by	JW	REVISIONS		

THE WORKS — CAMBRIDGE DEPARTMENT OF PUBLIC WORKS

Client	CITY OF CAMBRIDGE, MA	Sheet	SC-5.00
Project	RIVER STREET INFRASTRUCTURE AND STREETSCAPE PROJECT	Total Sheets	381
Drawing	**RIBBON - MISCELLANEOUS DETAILS**	File No.	CNS

File: C:\PW\WORKING\EAST01\D2575531\SC-1.00 - RIBBON LAYOUT AND ELEVATION.DWG Plotted: 8/15/2022 2:44:53 PM

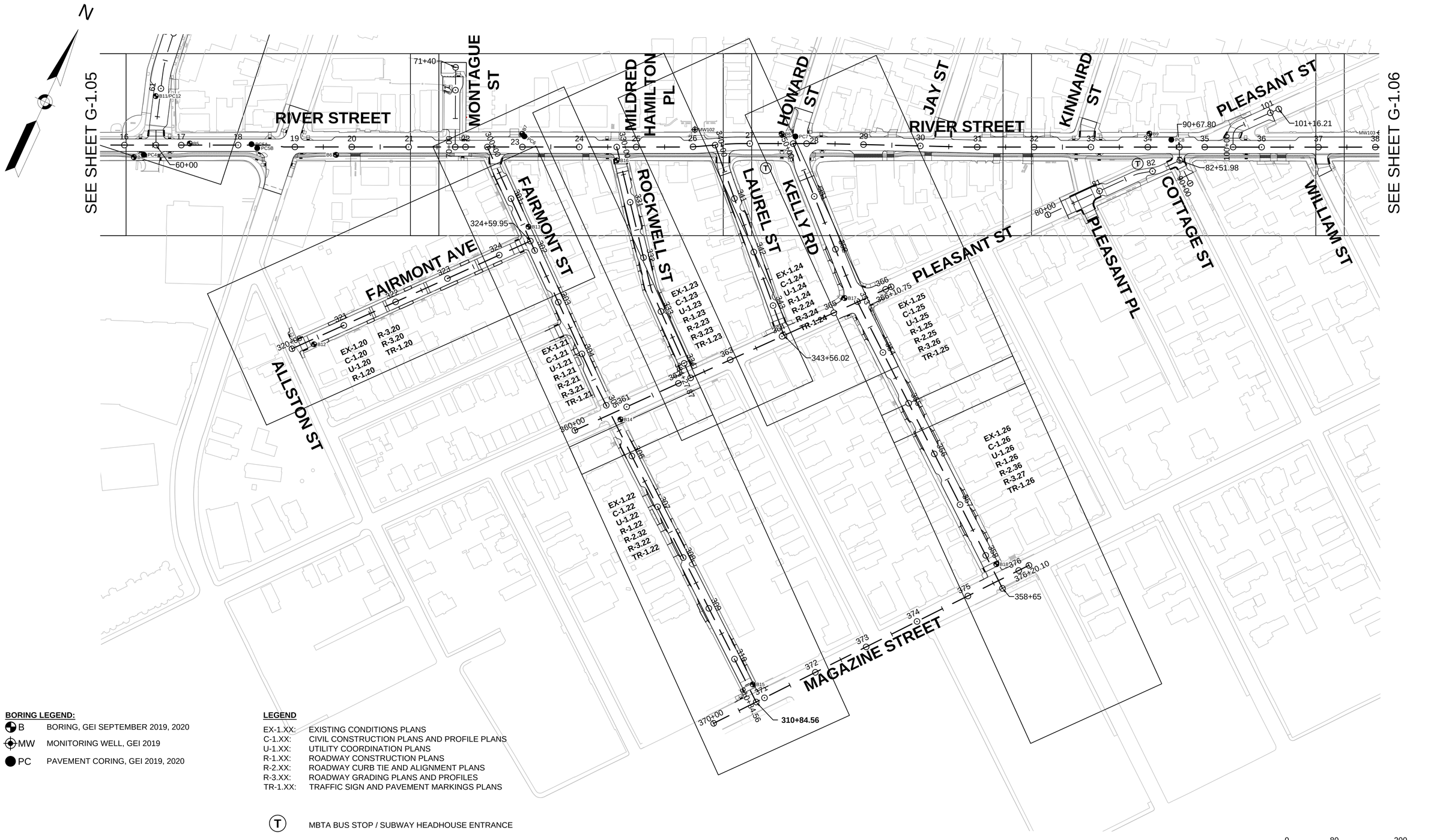

BORING LEGEND:

- B — BORING, GEI SEPTEMBER 2019, 2020
- MW — MONITORING WELL, GEI 2019
- PC — PAVEMENT CORING, GEI 2019, 2020

LEGEND

EX-1.XX:	EXISTING CONDITIONS PLANS
C-1.XX:	CIVIL CONSTRUCTION PLANS AND PROFILE PLANS
U-1.XX:	UTILITY COORDINATION PLANS
R-1.XX:	ROADWAY CONSTRUCTION PLANS
R-2.XX:	ROADWAY CURB TIE AND ALIGNMENT PLANS
R-3.XX:	ROADWAY GRADING PLANS AND PROFILES
TR-1.XX:	TRAFFIC SIGN AND PAVEMENT MARKINGS PLANS

(T) MBTA BUS STOP / SUBWAY HEADHOUSE ENTRANCE

KEY PLAN

0 80 200 300

SCALE: 1" = 80'

ISSUED FOR BID

HDR ENGINEERING, INC.
99 HIGH STREET, SUITE 2300
BOSTON, MASSACHUSETTS 02110–2378
(617) 357–7700

COMMONWEALTH OF MASSACHUSETTS — PHILIP FUSCO CIVIL No. 45868 — REGISTERED PROFESSIONAL ENGINEER

Scale			
Date			
Job No.			
Designed by			
Drawn by			
Checked by	No.	Description	Date
Approved by	REVISIONS		

THE WORKS — CAMBRIDGE DEPARTMENT OF PUBLIC WORKS

Client: CITY OF CAMBRIDGE, MA	Sheet: G-1.06A
Project: RIVER STREET INFRASTRUCTURE AND STREETSCAPE PROJECT	Total Sheets: 381
Drawing: **KEY PLAN - 3**	File No.

File: C:\PWWORKING\EAST\01\D07863961\8412R_HD\CNS_KEY PLAN).DWG Plotted: 4/19/2022 1:23:26 PM

Sample ID	Pavement Thickness (in.)	Photo	Other Notes
B12/PC12	5.0		Asphalt only
B13/PC13	4.3		Asphalt only
B14/PC14	5.0		Asphalt only

Sample ID	Pavement Thickness (in.)	Photo	Other Notes
B15/PC15	4.5		Asphalt only
B16/PC16	4.0		Asphalt only
B17/PC17	5.0		Asphalt only

Sample ID	Pavement Thickness (in.)	Photo	Other Notes
B18/PC18	6.0		Asphalt only

File: C:\PWWORKING\EAST01\D0786396\8412R_(PAVEMENT CORES).DWG Plotted: 4/19/2022 1:23:31 PM

ISSUED FOR BID

HDR ENGINEERING, INC.
99 HIGH STREET, SUITE 2300
BOSTON, MASSACHUSETTS 02110–2378
(617) 357–7700

GEI Consultants

COMMONWEALTH OF MASSACHUSETTS
PHILIP FUSCO
CIVIL
No. 45868
REGISTERED PROFESSIONAL ENGINEER

Scale			
Date			
Job No.			
Designed by			
Drawn by			
Checked by	No.	Description	Date
Approved by	REVISIONS		

THE WORKS — CAMBRIDGE DEPARTMENT OF PUBLIC

Client	CITY OF CAMBRIDGE, MA	Sheet	G-1.09
Project	RIVER STREET INFRASTRUCTURE AND STREETSCAPE PROJECT	Total Sheets	381
Drawing	**PAVEMENT CORES**	File No.	

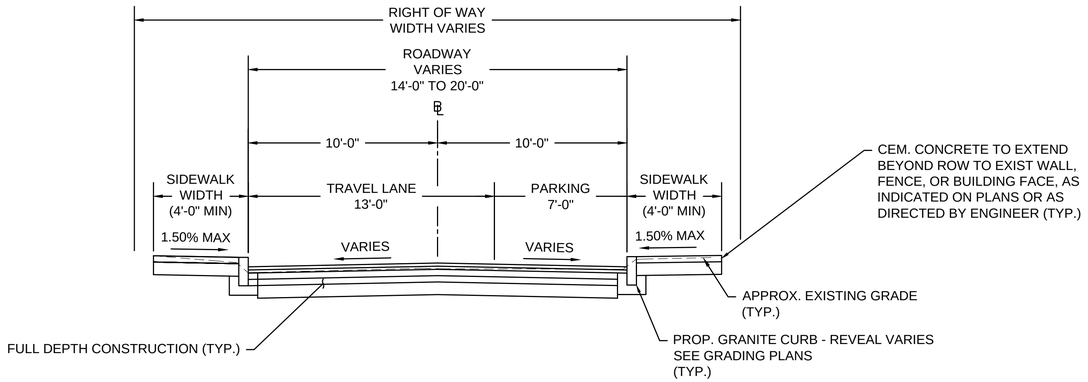

TYPICAL SECTION - FAIRMONT STREET

SCALE: 1" = 4'
STA 305+57 TO STA 308+13

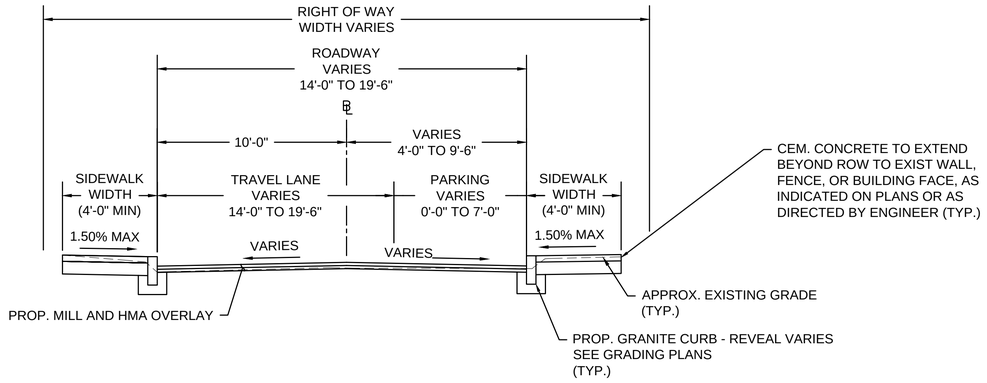

TYPICAL SECTION - FAIRMONT STREET

SCALE: 1" = 4'
STA 300+59 TO STA 304+78

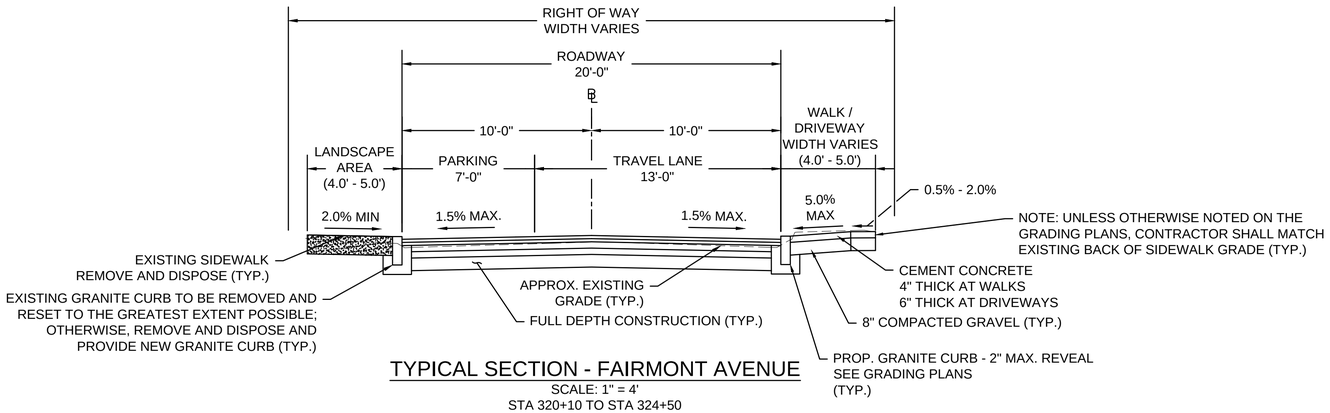

TYPICAL SECTION - FAIRMONT AVENUE

SCALE: 1" = 4'
STA 320+10 TO STA 324+50

PAVEMENT NOTES

PROPOSED MILLING & HMA OVERLAY

MILLING: 2" MILLING

SURFACE: 2" HOT MIX ASPHALT TOP COURSE 12.5 (SSC-12.5)

PROPOSED FULL-DEPTH CONSTRUCTION

SURFACE: 2" HMA MODIFIED TOP COURSE MATERIAL (SSC-12.0)
4" HMA BINDER COURSE MATERIAL (SIC 19.0)

SUBBASE: 4" DENSE GRADE CRUSHED STONE FOR SUB-BASE OVER
8" GRAVEL BORROW, TYPE B OVER COMPACTED SUBGRADE

ASPHALT EMULSION FOR TACK COAT

ASPHALT ELMUSION FOR TACK COAT SHALL BE PLACED ON ALL MILLED SURFACES (APPLICATION RATE = 0.07 GAL/SY) AND BETWEEN ALL NEW PAVEMENT LAYERS (APPLICATION RATE = 0.05 GAL/SY)

CEMENT CONCRETE SIDEWALK

SURFACE: 4" CEMENT CONCRETE (4,000 PIS, $\frac{3}{4}$", 610) OVER

SUBBASE: 8" GRAVEL BORROW, TYPE B

CEMENT CONCRETE WHEELCHAIR RAMP, BUS ISLAND AND DRIVEWAY

SURFACE: 6" CEMENT CONCRETE (4,000 PSI, $\frac{3}{4}$", 610) OVER

SUBBASE: 8" GRAVEL BORROW, TYPE B

BRICK SIDEWALK

SURFACE: 2-1/4" BRICK OVER

SUBBASE: TACK COAT
3/4" SAND-ASPHALT SETTING BED
ASPHALT TACK COAT
4" ASPHALT BINDER COURSE
8" COMPACTED GRAVEL SUB-BASE

BRICK DRIVEWAY

SURFACE: 2-1/4" BRICK OVER

SUBBASE: TACK COAT
3/4" SAND-ASPHALT SETTING BED
ASPHALT TACK COAT
4" ASPHALT BINDER COURSE
8" COMPACTED GRAVEL SUB-BASE

NOTES:

1. SEE SPECIFICATIONS REGARDING RE-USE OF EXISTING CONCRETE AND ASPHALT MATERIALS IN SUBBASE.

ISSUED FOR BID

HDR ENGINEERING, INC.
99 HIGH STREET, SUITE 2300
BOSTON, MASSACHUSETTS 02110–2378
(617) 357–7700

COMMONWEALTH OF MASSACHUSETTS
PHILIP FUSCO
CIVIL
No. 45868
REGISTERED PROFESSIONAL ENGINEER

Scale			
Date			
Job No.			
Designed by			
Drawn by			
Checked by	No.	Description	Date
Approved by	REVISIONS		

THE WORKS — CAMBRIDGE DEPARTMENT OF PUBLIC WORKS

Client: CITY OF CAMBRIDGE, MA	Sheet: G-2.05
Project: RIVER STREET INFRASTRUCTURE AND STREETSCAPE PROJECT	Total Sheets: 381
Drawing: **TYPICAL SECTIONS - 5**	File No.

File: C:\PWWORKING\EAST01\D07863968412R_(TYPICAL SECTIONS).DWG Plotted: 4/19/2022 1:24:40 PM

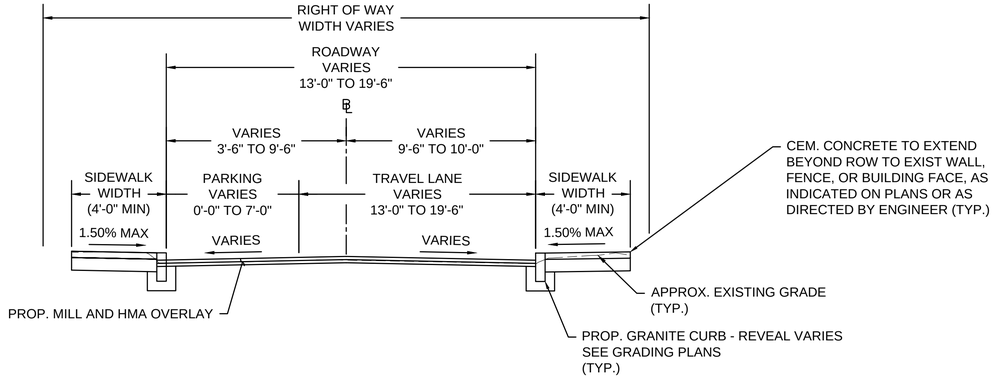

TYPICAL SECTION - LAUREL STREET

SCALE: 1" = 4'
STA 340+54 TO STA 343+44

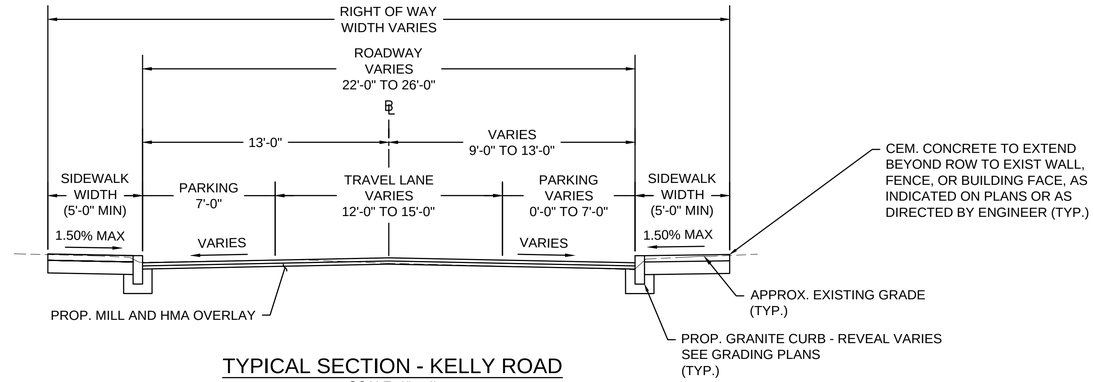

TYPICAL SECTION - KELLY ROAD

SCALE: 1" = 4'
STA 353+00 TO STA 358+36

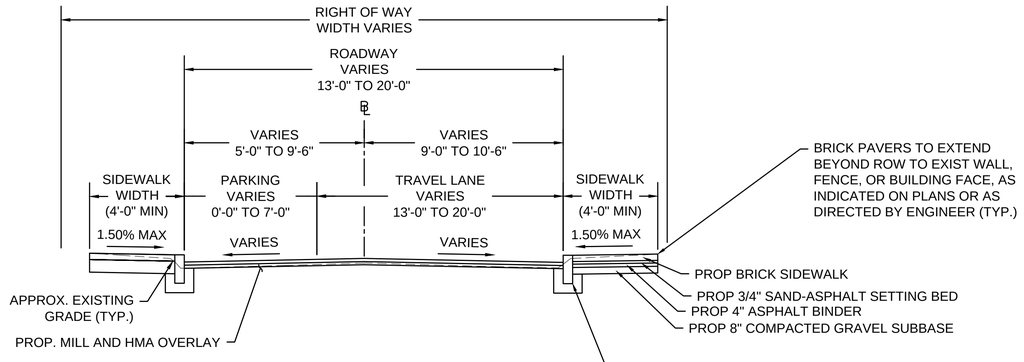

TYPICAL SECTION - ROCKWELL STREET

SCALE: 1" = 4'
STA 330+45 TO STA 334+15

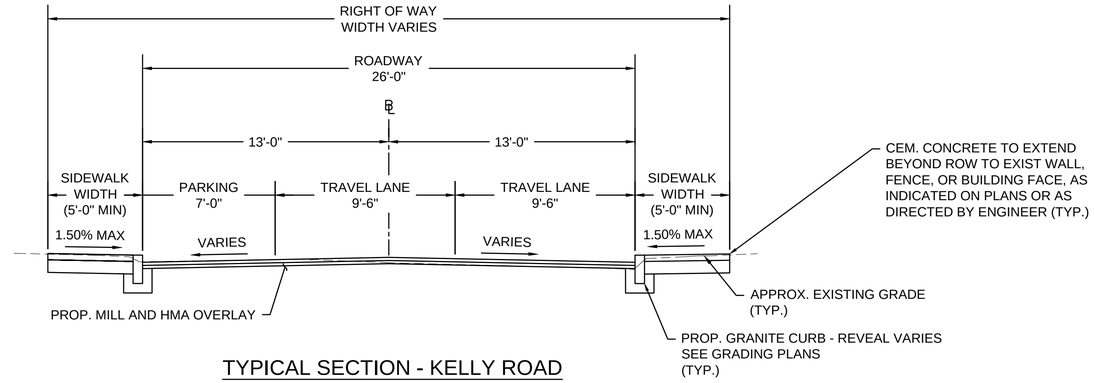

TYPICAL SECTION - KELLY ROAD

SCALE: 1" = 4'
STA 350+66 TO STA 353+00

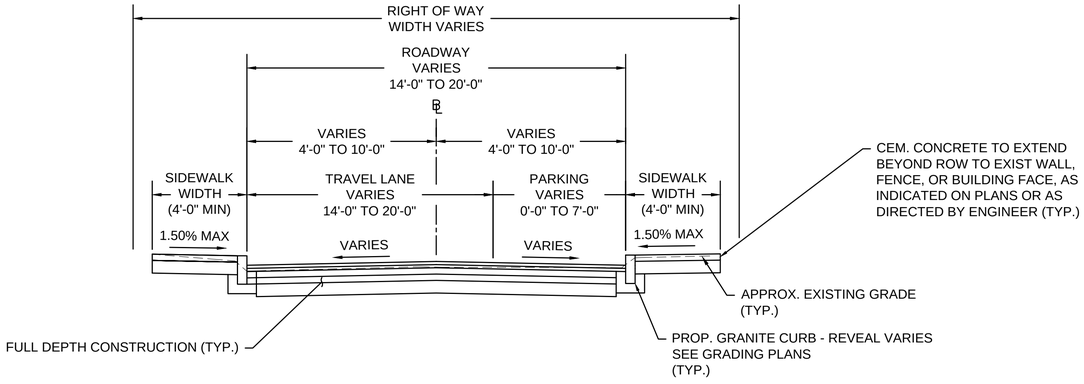

TYPICAL SECTION - FAIRMONT STREET

SCALE: 1" = 4'
STA 308+27 TO STA 310+72

ISSUED FOR BID

HDR ENGINEERING, INC.
99 HIGH STREET, SUITE 2300
BOSTON, MASSACHUSETTS 02110-2378
(617) 357-7700

PHILIP FUSCO CIVIL No. 45868 REGISTERED PROFESSIONAL ENGINEER
COMMONWEALTH OF MASSACHUSETTS

Scale			
Date			
Job No.			
Designed by			
Drawn by			
Checked by	No.	Description	Date
Approved by	REVISIONS		

CAMBRIDGE DEPARTMENT OF PUBLIC WORKS

Client	CITY OF CAMBRIDGE, MA	Sheet	G-2.06
Project	RIVER STREET INFRASTRUCTURE AND STREETSCAPE PROJECT	Total Sheets	381
Drawing	**TYPICAL SECTIONS - 6**	File No.	

File: C:\PW\WORKING\EAST01\D0786396\8412R_(TYPICAL SECTIONS).DWG Plotted: 4/19/2022 1:24:55 PM

SEE SHEET G-3.09

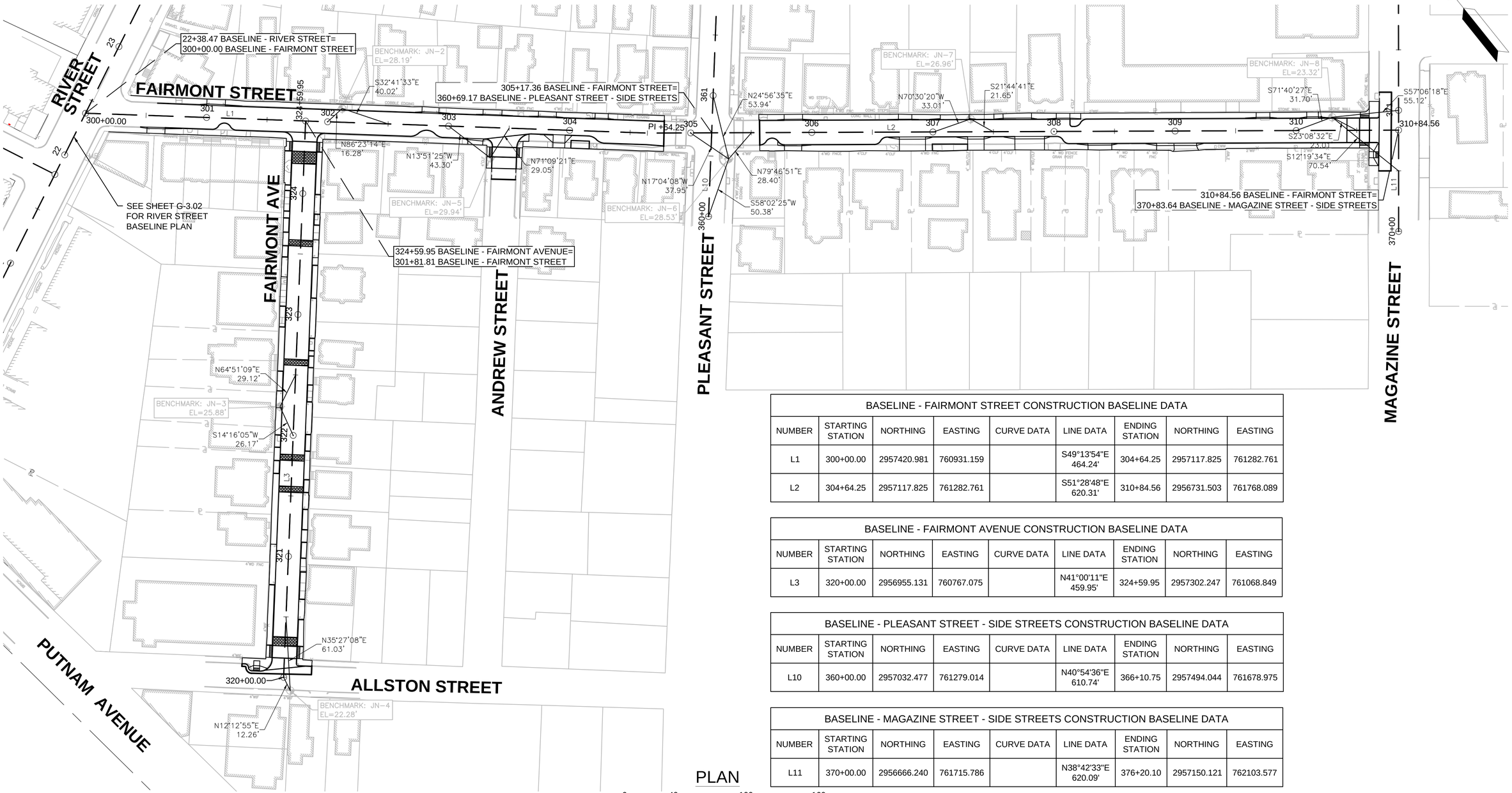

PLAN

0 40 100 160

SCALE: 1" = 40'

BASELINE - FAIRMONT STREET CONSTRUCTION BASELINE DATA

NUMBER	STARTING STATION	NORTHING	EASTING	CURVE DATA	LINE DATA	ENDING STATION	NORTHING	EASTING
L1	300+00.00	2957420.981	760931.159		S49°13'54"E 464.24'	304+64.25	2957117.825	761282.761
L2	304+64.25	2957117.825	761282.761		S51°28'48"E 620.31'	310+84.56	2956731.503	761768.089

BASELINE - FAIRMONT AVENUE CONSTRUCTION BASELINE DATA

NUMBER	STARTING STATION	NORTHING	EASTING	CURVE DATA	LINE DATA	ENDING STATION	NORTHING	EASTING
L3	320+00.00	2956955.131	760767.075		N41°00'11"E 459.95'	324+59.95	2957302.247	761068.849

BASELINE - PLEASANT STREET - SIDE STREETS CONSTRUCTION BASELINE DATA

NUMBER	STARTING STATION	NORTHING	EASTING	CURVE DATA	LINE DATA	ENDING STATION	NORTHING	EASTING
L10	360+00.00	2957032.477	761279.014		N40°54'36"E 610.74'	366+10.75	2957494.044	761678.975

BASELINE - MAGAZINE STREET - SIDE STREETS CONSTRUCTION BASELINE DATA

NUMBER	STARTING STATION	NORTHING	EASTING	CURVE DATA	LINE DATA	ENDING STATION	NORTHING	EASTING
L11	370+00.00	2956666.240	761715.786		N38°42'33"E 620.09'	376+20.10	2957150.121	762103.577

ISSUED FOR BID

HDR ENGINEERING, INC.
99 HIGH STREET, SUITE 2300
BOSTON, MASSACHUSETTS 02110-2378
(617) 357-7700

PHILIP FUSCO CIVIL No. 45868 REGISTERED PROFESSIONAL ENGINEER
COMMONWEALTH OF MASSACHUSETTS

Scale			
Date			
Job No.			
Designed by			
Drawn by			
Checked by	No.	Description	Date
Approved by	REVISIONS		

THE WORKS — CAMBRIDGE DEPARTMENT OF PUBLIC WORKS

Client: CITY OF CAMBRIDGE, MA
Project: RIVER STREET INFRASTRUCTURE AND STREETSCAPE PROJECT
Drawing: **CONSTRUCTION BASELINE PLAN - 7**
Sheet: G-3.08
Total Sheets: 381
File No.

File: C:\PWWORKING\EAST01\D0786396\8412R_HD(CNS_BASELINE PLANS).DWG Plotted: 4/19/2022
1:25:17 PM

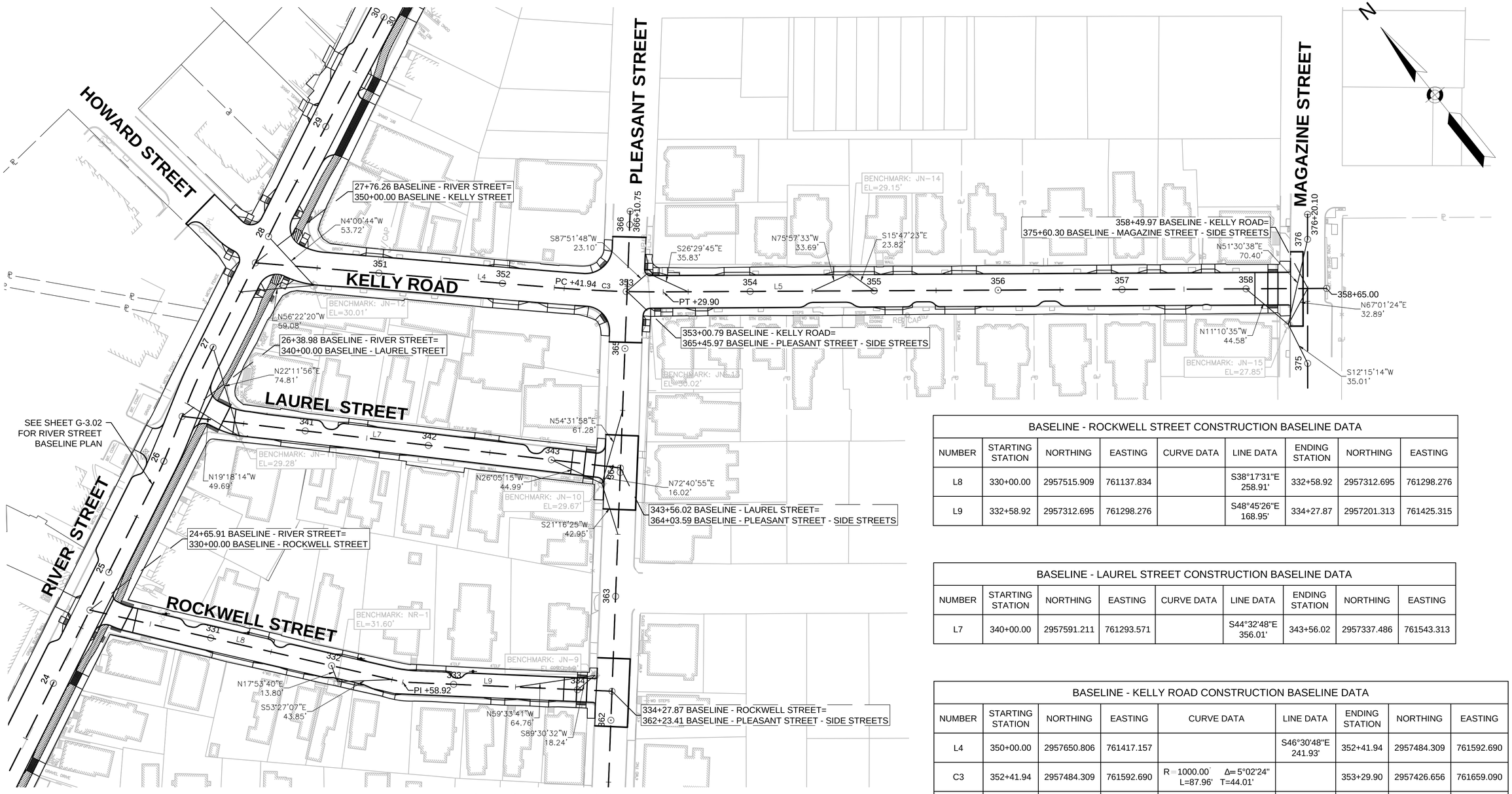

BASELINE - ROCKWELL STREET CONSTRUCTION BASELINE DATA								
NUMBER	STARTING STATION	NORTHING	EASTING	CURVE DATA	LINE DATA	ENDING STATION	NORTHING	EASTING
L8	330+00.00	2957515.909	761137.834		S38°17'31"E 258.91'	332+58.92	2957312.695	761298.276
L9	332+58.92	2957312.695	761298.276		S48°45'26"E 168.95'	334+27.87	2957201.313	761425.315

BASELINE - LAUREL STREET CONSTRUCTION BASELINE DATA								
NUMBER	STARTING STATION	NORTHING	EASTING	CURVE DATA	LINE DATA	ENDING STATION	NORTHING	EASTING
L7	340+00.00	2957591.211	761293.571		S44°32'48"E 356.01'	343+56.02	2957337.486	761543.313

BASELINE - KELLY ROAD CONSTRUCTION BASELINE DATA								
NUMBER	STARTING STATION	NORTHING	EASTING	CURVE DATA	LINE DATA	ENDING STATION	NORTHING	EASTING
L4	350+00.00	2957650.806	761417.157		S46°30'48"E 241.93'	352+41.94	2957484.309	761592.690
C3	352+41.94	2957484.309	761592.690	R=1000.00' Δ=5°02'24" L=87.96' T=44.01'		353+29.90	2957426.656	761659.090
L5	353+29.90	2957426.656	761659.090		S51°33'12"E 535.09'	358+65.00	2957093.939	762078.172

PLAN

0 40 100 160

SCALE: 1" = 40'

ISSUED FOR BID

HDR ENGINEERING, INC.
99 HIGH STREET, SUITE 2300
BOSTON, MASSACHUSETTS 02110–2378
(617) 357–7700

PHILIP FUSCO CIVIL No. 45868 REGISTERED PROFESSIONAL ENGINEER
COMMONWEALTH OF MASSACHUSETTS

Scale			
Date			
Job No.			
Designed by			
Drawn by			
Checked by	No.	Description	Date
Approved by	REVISIONS		

THE WORKS — CAMBRIDGE DEPARTMENT OF PUBLIC WORKS

Client: CITY OF CAMBRIDGE, MA

Project: RIVER STREET
INFRASTRUCTURE AND STREETSCAPE PROJECT

Drawing: **CONSTRUCTION BASELINE PLAN - 8**

Sheet: G-3.09

Total Sheets: 381

File No.

File: C:\PWWORKING\EAST01\D0786396\R412R_HD\CNS_BASELINE PLANS).DWG Plotted: 4/19/2022 1:25:26 PM

DRAINAGE STRUCTURE TABLE						
NAME/TYPE	STATION	OFFSET	RIM ELEV.	INV. ELEV. IN	INV. ELEV. OUT	SUMP
CB-300	19+35.68	346.2 R	21.10		I=19.09' (DMH-300)	6.0'
CB-301	19+28	330.6 R	21.16		I=19.09' (DMH-300)	6.0'
CB-302	21+07.84	268.5 R	23.50		I=19.38' (D16DMH4010)	6.0'
CB-302 (1)	20+66.32	267.8 R	22.92		I=19.13' (D16DMH4010)	6.0'
CB-302 (1) (1)	22+11.93	201.8 R	25.37	I=18.38' (D16DMH4015)		6.0'
CB-302 (1) (2)	22+19.31	218.1 R	25.33	I=18.38' (D16DMH4015)		6.0'
CB-400	22+82.48	117.0 R	23.45		I=20.00' (D16DMH4020)	6.0'
CB-401	25+07.91	594.2 R	26.50		I=23.50' (DMH-401)	6.0'
CB-402	25+88.24	728.5 R	24.41		I=21.30' (D12DMH7710)	6.0'
CB-403	26+08.73	944.8 R	21.74		I=18.40' (D12DMH7525)	6.0'
CB-404	26+23.27	938.4 R	21.84		I=18.80' (D12DMH7525)	6.0'
CB-500	24+96.08	88.0 R	27.34		I=24.30' (D16DMH7112)	6.0'
CB-501	25+14.19	163.4 R	28.58		I=25.40' (D16DMH7112)	6.0'
CB-502	25+72.04	375.5 R	28.22		I=25.00' (DMH-400)	6.0'
CB-503	25+86.32	368.0 R	28.32		I=25.00' (DMH-400)	6.0'
CB-600	26+92.12	122.9 R	30.52		I=27.30' (DMH-600)	6.0'
CB-601	27+39.58	256.0 R	29.61		I=26.00' (DMH-601 (1))	6.0'
CB-602	27+39.11	305.7 R	28.70		I=25.90' (DMH-601)	6.0'
CB-603	27+56.35	299.3 R	28.98		I=25.90' (DMH-601)	6.0'
CB-700	29+50.20	403.7 R	28.22		I=25.40' (DS-693)	6.0'
CB-701	29+91.83	481.5 R	27.52		I=24.80' (DS-694)	6.0'
D12CBN7526	310+69.83	18.2 L	21.93		I=18.82' (D12DMH7526)	0.0'

DRAINAGE STRUCTURE TABLE						
NAME/TYPE	STATION	OFFSET	RIM ELEV.	INV. ELEV. IN	INV. ELEV. OUT	SUMP
D16DMH4020	301+80.44	1.6 R	25.03	I=19.23' (D16CBN7010) I=19.44' (CB-400)	I=19.03' (DS-680)	0.0'
D16DMH7110	332+51.38	0.2 R	29.27	I=21.38' (D16DMH7112)	I=21.38' (DMH-400)	0.0'
D16DMH7112	331+45.40	0.0 L	28.39	I=21.95' (D16DMH7115) I=23.77' (CB-500) I=25.18' (CB-501)	I=21.95' (D16DMH7110)	0.0'
D16DMH7115	330+58.74	1.6 L	25.63	I=21.98' (D16CBN7116)	I=21.88' (D16DMH7112)	0.0'
D16DMH7410	352+30.20	2.7 L	29.45	I=21.51' (D16DMH7415) I=24.87' (D16CBN7410)	I=21.51' (D16DMH1056)	0.2'
D16DMH7415	351+68.22	3.3 L	28.48	I=21.71' (D16DMH7420) I=24.21' (D16CBN7414)	I=21.61' (D16DMH7410)	0.0'
D16DMH7420	350+47.40	1.9 L	28.30	I=23.95' (D16CBN7424) I=23.86' (D16CBN7420)	I=21.95' (D16DMH7415)	0.0'
DMH-300	19+31.29	338.5 R	21.19	I=19.00' (CB-300) I=19.00' (CB-301) I=15.04' (DS-684)	I=15.03' (D16DMH4008)	0.0'
DMH-400	25+82.03	371.4 R	28.20	I=20.22' (D16DMH7110) I=24.89' (CB-502) I=24.93' (CB-503)	I=20.22' ()	0.0'
DMH-401	25+15.83	590.4 R	26.54	I=17.82' (DS-717) I=23.41' (CB-401)	I=17.82' (D12DMH7715)	0.0'
DMH-600	26+86.69	127.9 R	30.46	I=22.48' (D16DMH7420) I=27.23' (CB-600)	I=22.48' (DMH-601 (1))	0.0'
DMH-601	27+48.27	302.7 R	28.93	I=21.65' (DMH-601 (1)) I=25.80' (CB-602) I=25.81' (CB-603)	I=21.65' (D16DMH1055)	0.0'

DRAINAGE STRUCTURE TABLE						
NAME/TYPE	STATION	OFFSET	RIM ELEV.	INV. ELEV. IN	INV. ELEV. OUT	SUMP
D12CBN7540	31+27.50	715.9 R	25.80			0.0'
D12CBN7542	31+05.67	725.6 R	25.70			0.0'
D12CBN7700	305+55.89	9.0 R	23.64		I=22.12' (D12DMH7715)	0.0'
D12CBN7705	310+56.83	8.8 R	21.80	I=16.80' (D12DMH7525)		0.0'
D12DMH7525	310+71.56	0.1 L	21.77	I=17.77' (D12DMH7526) I=18.18' (CB-403) I=18.58' (CB-404)	I=16.47' (D12CBN7705) I=14.17' (DS-715)	0.0'
D12DMH7526	310+65.21	17.9 L	22.11	I=18.38' (D12CBN7526)	I=17.77' (D12DMH7525)	0.0'
D12DMH7537	358+53.53	3.6 R	25.99	I=15.70' (DS-701)	I=15.70' ()	5.5'
D12DMH7540	358+03.29	1.2 L	26.16	I=19.74' () I=21.54' ()	I=19.74' (DS-701) I=19.81' ()	0.2'
D12DMH7701	305+44.90	8.5 L	26.99	I=22.48' (D12DMH7715)	I=22.08' (DS-720)	0.0'
D12DMH7710	308+30.17	7.0 R	24.19	I=16.07' (DS-715) I=21.06' (CB-402)	I=16.27' (DS-717)	0.0'
D12DMH7715	305+65.97	0.8 R	26.17	I=18.61' (DMH-401) I=21.01' (D12CBN7700)	I=22.31' (D12DMH7701)	0.0'
D12DMH7910	356+32.82	3.7 R	26.86	I=20.43' (DS-695)	I=20.33' (DS-697)	0.2'
D16CBN1037	304+80.87	9.7 R	26.39		I=23.03' (D16DMH1042)	0.0'
D16CBN1040	305+31.31	22.9 L	26.18		I=23.18' (D16DMH1040)	0.0'
D16CBN1041	305+05.95	23.5 L	26.03	I=23.51' (D16DMH1040)		0.0'
D16CBN1043	304+79.44	8.5 L	26.49	I=23.51' (D16DMH1042)		0.0'
D16CBN1045	334+03.49	9.4 R	28.07			0.0'
D16CBN1047	334+16.29	22.7 L	27.30		I=24.44' (D16DMH1045)	0.0'
D16CBN1051	343+25.97	9.0 R	28.87		I=24.24' (D16DMH1055)	0.0'
D16CBN1053	343+41.14	12.3 L	28.40	I=25.15' (D16DMH1055)		0.0'
D16CBN1055	29+25.15	249.1 R	28.58			0.0'
D16CBN1056	29+31.12	274.5 R	28.54			0.0'
DMH-601 (1)	27+32.78	258.6 R	29.50	I=21.86' (DMH-600) I=25.76' (CB-601)	I=21.86' (DMH-601)	0.0'
DS-680	N/A	N/A	19.81	I=18.58' (D16DMH4020)	I=18.58' (D16DMH4015)	0.0'
DS-682	N/A	N/A	18.19	I=16.67' (D16DMH4015)	I=16.67' (D16DMH4010)	0.0'
DS-684	N/A	N/A	17.85	I=15.91' (D16DMH4010)	I=15.91' (DMH-300)	0.0'
DS-686	350+45.31	12.5 R	0.00			0.0'
DS-693	354+02.90	0.1 L	28.41	I=21.33' (D16DMH1056) I=21.33' (CB-700)	I=21.33' (DS-694)	0.2'
DS-694	355+00.07	0.2 L	27.67	I=20.95' (DS-693) I=24.51' (CB-701)	I=20.95' (DS-695)	0.2'
DS-695	355+99.80	0.0 L	24.36	I=20.55' (DS-694)	I=20.55' (D12DMH7910)	0.0'
DS-697	356+74.78	0.6 R	23.78	I=20.19' (D12DMH7910)	I=20.19' ()	0.0'
DS-701	358+24.51	3.5 R	22.78	I=17.82' (D12DMH7540)	I=17.82' (D12DMH7537)	0.0'

DRAINAGE STRUCTURE TABLE						
NAME/TYPE	STATION	OFFSET	RIM ELEV.	INV. ELEV. IN	INV. ELEV. OUT	SUMP
D16CBN3814	320+18.31	9.1 L	20.47			0.0'
D16CBN3815	320+19.78	9.0 R	20.35			0.0'
D16CBN7010	302+00.86	8.9 R	25.36		I=19.58' (D16DMH4020)	1.3'
D16CBN7015	301+72.33	9.1 L	25.15			0.0'
D16CBN7116	330+54.27	9.0 R	25.42		I=21.16' (D16DMH7115)	0.0'
D16CBN7220	340+28.11	8.7 R	27.18		I=23.01' (D16DMH7420)	0.0'
D16CBN7410	352+27.41	12.5 R	28.61		I=24.94' (D16DMH7410)	3.4'
D16CBN7414	351+63.88	12.5 R	28.46		I=25.79' (D16DMH7415)	4.2'
D16CBN7420	27+81.64	46.6 R	28.25		I=23.93' (D16DMH7420)	0.0'
D16CBN7424	28+05.04	37.0 R	28.76		I=24.01' (D16DMH7420)	0.0'
D16dmh7420	340+44.84	2.9 L	27.96	I=22.88' (DS-703) I=23.38' (D16CBN7220)	I=22.88' (DMH-600)	0.0'
D16DMH1040	305+20.82	9.9 L	26.25	I=21.45' (D16DMH1042) I=-0.50' (D16CBN1040)	I=-6.63' (D16CBN1041)	0.0'
D16DMH1042	24+45.23	454.0 R	26.38	I=21.45' (D16CBN1037)	I=22.00' (D16CBN1043) I=22.00' (D16DMH1040)	0.0'
D16DMH1045	362+24.86	5.3 R	27.68	I=20.58' (D16CBN1047)		0.0'
D16DMH1047	26+89.12	373.8 R	28.37			0.0'
D16DMH1055	364+03.46	5.5 R	28.86	I=22.18' (D16CBN1051) I=21.46' (DMH-601)	I=20.56' (D16CBN1053)	0.0'
D16DMH1056	353+05.89	1.9 L	29.13	I=21.38' (D16DMH7410)	I=21.38' (DS-693)	0.0'
D16DMH1057	29+23.78	269.0 R	29.34			0.0'
D16DMH3820	320+03.44	1.8 R	20.77		I=14.36' (D16DMH4008)	0.0'
D16DMH4008	320+17.66	0.0 L	21.16	I=14.87' (DMH-300) I=14.67' (D16DMH3820)		0.0'
D16DMH4010	321+92.18	3.9 R	22.91	I=16.38' (DS-682) I=19.00' (CB-302) I=19.00' (CB-302 (1))	I=16.18' (DS-684)	0.0'
D16DMH4015	323+51.52	0.7 L	25.28	I=18.38' (DS-680)	I=18.08' (DS-682) I=18.58' (CB-302 (1) (1)) I=18.58' (CB-302 (1) (2))	0.0'

DRAINAGE STRUCTURE TABLE						
NAME/TYPE	STATION	OFFSET	RIM ELEV.	INV. ELEV. IN	INV. ELEV. OUT	SUMP
DS-703	340+32.62	33.3 L	27.69		I=23.04' (D16DMH7420)	0.0'
DS-715	308+73.50	0.2 R	17.51	I=15.71' (D12DMH7525)	I=15.71' (D12DMH7710)	0.0'
DS-717	307+97.32	0.1 R	18.09	I=16.58' (D12DMH7710)	I=16.58' (DMH-401)	0.0'
DS-720	305+52.03	9.0 L	26.08	I=21.47' (D12DMH7701)		0.1'
DS-823	33+21.02	679.6 R	0.00			0.0'

5/3/2022 9:15:11 AM

File: C:\PWWORKING\EAST\01\D0786396\7113XXX_(CNS CATCH BASIN SCHEDULE).DWG Plotted:

ISSUED FOR BID

HDR ENGINEERING, INC.
99 HIGH STREET, SUITE 2300
BOSTON, MASSACHUSETTS 02110–2378
(617) 357–7700

COMMONWEALTH OF MASSACHUSETTS
PHILIP FUSCO
CIVIL
No. 45868
REGISTERED PROFESSIONAL ENGINEER

Scale			
Date			
Job No.			
Designed by			
Drawn by			
Checked by	No.	Description	Date
Approved by	REVISIONS		

THE WORKS — CAMBRIDGE DEPARTMENT OF PUBLIC

Client: CITY OF CAMBRIDGE, MA

Project: RIVER STREET
INFRASTRUCTURE AND STREETSCAPE PROJECT

Drawing: **CNS CATCH BASIN SCHEDULE**

Sheet: CD-1.10

Total Sheets: 381

File No.

DRIVEWAY DATA (CONT'D)

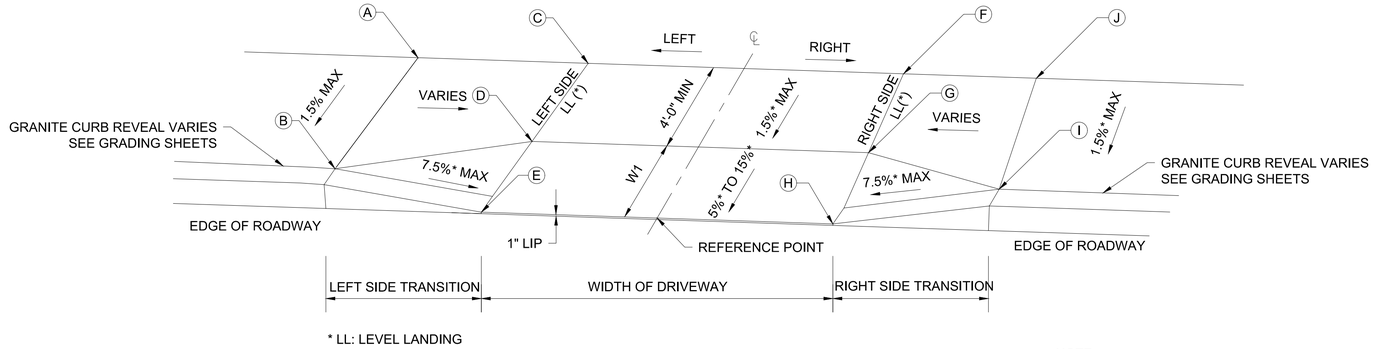

* LL: LEVEL LANDING

TYPE 2: TRANSITION CURB DRIVEWAY

NOT TO SCALE

NOTE:

GRADES E AND H CORRESPOND TO TOP OF CONCRETE 1" ABOVE PROPOSED ROADWAY SURFACE

	DRIVE REFERENCE POINT			LENGTH OF PRIMARY RAMP (W1)			DEPTH OF LEVEL LANDING (LL)			WIDTH OF DRIVEWAY	ROADWAY GUTTER SLOPE	TRANSITION LENGTH			ELEVATION								
DRIVE #	STATION	OFFSET		(LEFT	-	RIGHT)	(LEFT	-	RIGHT)			(LEFT	-	RIGHT)	A	B	C	D	E	F	G	H	I	J
40	320+56.65	10.50	R	N/A	-	N/A	5.07	-	4.88	16.36	1.71%	N/A	-	N/A	N/A	N/A	21.66	N/A	21.45	21.3	N/A	21.17	N/A	N/A
41	320+92.97	10.50	L	N/A	-	N/A	4.98	-	5.09	33.26	0.96%	N/A	-	N/A	N/A	N/A	21.85	N/A	21.71	22.17	N/A	22.03	N/A	N/A
42	321+45.99	10.50	R	N/A	-	N/A	4.67	-	4.74	13.48	1.19%	N/A	-	N/A	N/A	N/A	22.62	N/A	22.46	22.46	N/A	22.3	N/A	N/A
43	322+14.74	10.50	R	N/A	-	N/A	4.59	-	4.56	26.58	1.84%	N/A	-	N/A	N/A	N/A	23.79	N/A	23.43	23.07	N/A	22.94	N/A	N/A
44	322+29.28	10.50	L	N/A	-	N/A	5.04	-	4.97	13.69	1.83%	N/A	-	N/A	N/A	N/A	23.43	N/A	23.29	23.68	N/A	23.54	N/A	N/A
45	322+97.37	10.51	R	N/A	-	N/A	4.77	-	4.66	32.78	1.28%	N/A	-	N/A	N/A	N/A	25.14	N/A	24.98	24.74	N/A	24.56	N/A	N/A
46	323+38.83	10.50	L	N/A	-	N/A	5.18	-	5.12	16.31	0.37%	N/A	-	N/A	N/A	N/A	25.46	N/A	25.32	25.52	N/A	25.38	N/A	N/A
47	323+54.78	10.50	R	N/A	-	N/A	4.90	-	4.89	14.71	0.75%	N/A	-	N/A	N/A	N/A	25.66	N/A	25.47	25.5	N/A	25.36	N/A	N/A
48	323+91.45	10.50	R	N/A	-	N/A	4.73	-	4.96	15.81	2.59%	N/A	-	N/A	N/A	N/A	26.07	N/A	25.91	26.53	N/A	26.32	N/A	N/A
49	300+62.54	9.54	R	1.07	-	1.07	4.09	-	3.91	14.85	N/A	14.00	-	5.50	N/A	22.6	21.84	21.78	21.62	N/A	N/A	N/A	N/A	N/A
50	301+07.45	10.04	L	1.14	-	1.14	3.93	-	4.07	15.24	3.08%	5.50	-	14.00	N/A	22.81	22.95	22.9	22.73	23.43	23.37	23.2	23.91	N/A
51	302+84.56	10.50	L	1.04	-	1.00	4.15	-	3.85	13.91	0.79%	7.67	-	9.00	N/A	27.69	27.44	27.38	27.23	27.54	27.49	27.34	27.70	N/A
52	303+23.51	10.00	R	1.00	-	1.00	4.18	-	3.98	13.56	1.11%	N/A	-	4.42	N/A	N/A	27.72	27.66	27.52	27.86	27.81	27.67	27.94	N/A
53	303+35.80	10.50	L	0.72	-	0.71	3.93	-	4.02	15.58	0.83%	5.50	-	9.00	N/A	27.96	27.82	27.77	27.67	27.96	27.9	27.8	28.23	N/A
54	303+81.17	10.48	L	0.82	-	0.82	4.02	-	3.80	14.77	0.27%	7.67	-	5.50	N/A	28.27	28.06	28	27.88	28.01	27.96	27.84	28.14	N/A
55	303+91.50	4.50	R	6.71	-	6.71	3.95	-	4.15	9.83	2.75%	5.47	-	7.67	28	27.95	28.1	28.06	27.7	28.38	28.33	27.97	28.11	28.21
56	304+26.03	10.50	L	0.83	-	0.83	3.97	-	4.04	10.80	1.85%	7.66	-	4.42	28.2	28.11	27.91	27.86	27.74	27.72	27.66	27.54	27.79	27.84
57	305+84.50	10.50	R	1.03	-	1.02	4.18	-	3.89	14.37	0.84%	7.68	-	5.74	26.8	26.77	26.62	26.56	26.41	26.49	26.44	26.29	N/A	N/A
58	305+84.81	10.50	L	0.95	-	1.00	4.00	-	4.02	15.23	0.46%	5.50	-	7.65	26.7	26.59	26.54	26.49	26.35	26.62	26.56	26.42	26.73	26.79
59	306+83.08	4.50	R	1.94	-	1.94	9.64	-	9.73	21.53	1.67%	5.50	-	9.50	26.2	26.09	26.23	26.11	25.82	26.59	26.47	26.18	26.87	26.98
60	306+77.12	10.50	L	0.50	-	0.65	4.17	-	3.83	11.13	0.99%	9.00	-	5.50	26.6	26.61	26.36	26.3	26.23	26.26	26.21	26.12	26.32	26.26
61	307+18.07	10.50	L	1.00	-	1.00	3.18	-	3.34	23.78	0.55%	9.00	-	5.50	26.1	26.11	25.87	25.83	25.69	25.75	25.7	25.56	25.79	25.77
62	307+35.48	4.50	R	2.03	-	2.03	9.17	-	9.22	13.53	2.59%	5.50	-	9.00	25.6	25.43	25.62	25.52	25.22	25.99	25.87	25.57	26.06	26.12

NOTES:

1. SEE CONSTRUCTION PLANS AND CURB TIE PLANS FOR LOCATION OF DRIVEWAYS.
2. FINAL DRIVEWAY ELEVATIONS SHALL GRADE TO DRAIN AND LAYOUT SHALL BE APPROVED BY ENGINEER PRIOR TO PLACEMENT.
3. ALL DRIVEWAY GRADES SHALL CONFORM TO THE LATEST EDITION OF MASSDOT CONSTRUCTION STANDARD.
4. * = TOLERANCE FOR CONSTRUCTION ± 0.5%

ISSUED FOR BID

HDR ENGINEERING, INC.
99 HIGH STREET, SUITE 2300
BOSTON, MASSACHUSETTS 02110-2378
(617) 357-7700

COMMONWEALTH OF MASSACHUSETTS
PHILIP FUSCO
CIVIL
No. 45868
REGISTERED PROFESSIONAL ENGINEER

Scale			
Date			
Job No.			
Designed by			
Drawn by			
Checked by	No.	Description	Date
Approved by	REVISIONS		

THE WORKS — CAMBRIDGE DEPARTMENT OF PUBLIC WORKS

Client: CITY OF CAMBRIDGE, MA

Project: RIVER STREET INFRASTRUCTURE AND STREETSCAPE PROJECT

Drawing: **DRIVEWAY DETAILS - 1**

Sheet: RD-1.11

Total Sheets: 381

File No.

File: C:\PWWORKING\EAST01\D0786396\8412R_HD_(ROADWAY DETAILS).DWG Plotted: 4/25/2022
11:01:59 AM

	DRIVE REFERENCE POINT			LENGTH OF PRIMARY RAMP (W1)			DEPTH OF LEVEL LANDING (LL)			WIDTH OF DRIVEWAY	ROADWAY GUTTER SLOPE	TRANSITION LENGTH			ELEVATION							
DRIVE #	STATION	OFFSET		(LEFT	-	RIGHT)	(LEFT	-	RIGHT)			(LEFT	-	RIGHT)	A	B	C	D	E	F	G	H	I	J
63	307+69.80	10.50	L	1.11	-	1.17	3.74	-	4.13	23.33	2.49%	7.67	-	4.42	25.69	25.66	25.48	25.45	25.29	24.92	24.88	24.71	24.93	24.88
64	307+79.89	4.50	R	2.05	-	2.05	9.21	-	9.02	24.38	0.66%	5.5	-	9	25.33	25.23	25.23	25.12	24.82	25.39	25.28	24.98	25.30	25.41
65	308+07.55	10.50	L	0.93	-	0.96	4.15	-	3.99	11.24	0.18%	7.67	-	N/A	24.82	24.82	24.67	24.61	24.48	24.65	24.60	24.46	N/A	N/A
66	308+37.83	10.50	R	1.42	-	1.45	3.97	-	3.80	19.65	1.22%	4.42	-	9	24.31	24.26	24.28	24.23	24.02	24.52	24.47	24.26	24.68	24.73
67	Refer to Driveway 68	Refer to Driveway 68	R	Refer to Driveway 68	-	Refer to Driveway 68	Refer to Driveway 68	-	Refer to Driveway 68	Refer to Driveway 68	-	N/A	-	N/A	0.00	0.00	Refer to Driveway 68	0.00	0.00	Refer to Driveway 68	0.00	0.00	0.00	Refer to Driveway 68
68	309+01.20	10.50	R	1.96	-	1.96	4.38	-	3.87	32.92	1.34%	5.5	-	9	23.38	23.32	23.37	23.31	23.06	23.84	23.79	23.50	23.94	24.00
69	309+72.68	10.00	L	1.00	-	1.00	4.05	-	4.10	11.37	0.53%	9.01	-	5.5	N/A	23.02	22.81	22.75	22.61	22.75	22.69	22.55	22.78	N/A
70	310+13.60	10.00	L	1.00	-	1.00	4.23	-	4.23	9.69	5.26%	5.49	-	9	N/A	22.58	22.61	22.59	22.58	22.27	22.21	22.07	22.29	N/A
71	331+21.16	10.50	R	1.00	-	1.00	4.16	-	4.10	33.65	2.32%	7.65	-	5.5	N/A	28.95	28.89	28.83	28.68	28.10	28.04	27.90	28.02	N/A
72	331+37.39	9.50	L	1.66	-	1.66	3.49	-	3.95	16.02	0.62%	5	-	5.37	N/A	28.56	28.51	28.46	28.22	28.61	28.56	28.32	28.64	N/A
73	331+72.93	10.50	R	1.00	-	1.00	3.89	-	4.00	13.97	0.07%	7.66	-	5.5	N/A	29.18	28.98	28.93	28.79	28.98	28.92	28.78	28.99	N/A
74	332+12.69	9.50	L	1.50	-	1.50	3.26	-	3.33	12.78	0.00%	5	-	7.67	N/A	28.99	29.33	29.29	29.07	29.33	29.29	29.07	29.04	N/A
75	332+16.14	9.00	R	2.00	-	2.00	4.02	-	3.99	10.31	0.39%	7.29	-	5	N/A	29.22	29.20	29.15	28.85	29.16	29.11	28.81	29.03	N/A
76	332+50.46	10.50	R	1.19	-	1.00	3.67	-	3.31	9.87	3.65%	4.53	-	7.68	N/A	28.71	28.94	28.89	28.72	29.26	29.22	29.08	29.32	N/A
77	333+36.22	9.50	R	1.50	-	1.50	4.00	-	4.00	11.18	0.89%	9	-	5.54	N/A	29.64	29.72	29.66	29.44	29.60	29.56	29.34	29.65	N/A
78	333+69.76	9.50	R	1.44	-	1.44	3.96	-	3.80	14.97	2.20%	5.5	-	9	N/A	28.81	29.03	28.98	28.77	29.36	29.31	29.10	29.59	N/A
79	Refer to Driveway 80	0.00	L	Refer to Driveway 80	-	Refer to Driveway 80	0.00	-	Refer to Driveway 80	0.00	-	N/A	-	N/A	0.00	0.00	Refer to Driveway 80	0.00	0.00	Refer to Driveway 80	0.00	0.00	0.00	Refer to Driveway 80
80	341+01.44	9.61	R	1.50	-	1.50	3.60	-	3.36	39.54	2.66%	11	-	5.5	N/A	30.57	30.45	30.40	30.18	29.40	29.35	29.13	29.28	N/A
81	341+41.69	9.50	L	1.50	-	1.50	3.19	-	3.23	15.45	1.42%	8.19	-	7.66	N/A	30.77	30.93	30.89	30.67	31.15	31.11	30.89	31.30	N/A
82	341+69.76	9.50	R	2.50	-	2.50	4.30	-	4.25	16.34	0.86%	5.5	-	6	N/A	30.64	30.65	30.62	30.32	30.76	30.75	30.46	30.76	N/A
83	342+46.15	9.50	L	1.00	-	1.00	4.12	-	3.82	19.62	0.36%	9	-	5.5	N/A	30.20	29.86	29.80	29.66	29.79	29.74	29.59	29.93	N/A
84	350+95.28	13.00	L	2.50	-	2.50	4.01	-	3.84	13.78	0.36%	4.42	-	7.66	N/A	28.67	28.74	28.70	28.38	28.69	28.65	28.33	28.65	N/A
85	351+98.16	13.00	L	1.68	-	1.66	4.00	-	4.00	12.54	0.88%	4.42	-	7.67	N/A	28.84	28.84	28.79	28.54	28.95	28.89	28.65	29.04	N/A
86	352+04.00	13.00	R	3.00	-	3.00	4.23	-	4.37	20.76	1.49%	7.66	-	4.42	N/A	29.02	29.01	28.97	28.65	28.71	28.66	28.34	28.59	N/A
87	352+48.65	12.95	R	3.00	-	3.00	4.26	-	4.24	21.78	1.29%	8.96	-	7.68	N/A	28.92	28.87	28.84	28.90	28.98	28.94	28.62	28.96	N/A
88	353+60.81	13.00	R	2.49	-	2.49	3.95	-	4.05	9.94	2.72%	4.42	-	7.66	N/A	28.67	28.71	28.69	28.38	29.01	28.97	28.65	29.14	N/A
89	353+89.48	13.00	L	2.47	-	2.47	3.95	-	4.09	20.67	0.05%	7.67	-	4.42	N/A	28.87	28.90	28.87	28.55	28.84	28.85	28.56	28.80	N/A
90	Refer to Driveway 91	0.00	L	Refer to Driveway 91	-	Refer to Driveway 91	0.00	-	Refer to Driveway 91	0.00	-	N/A	-	N/A	0.00	0.00	Refer to Driveway 91	0.00	0.00	Refer to Driveway 91	0.00	0.00	0.00	Refer to Driveway 91
91	354+83.91	13.00	L	2.50	-	2.50	4.26	-	4.08	32.80	0.06%	7.66	-	4.42	N/A	28.30	28.31	28.26	27.94	28.27	28.24	27.92	28.21	N/A
92	355+23.04	13.00	L	2.50	-	2.50	4.24	-	4.10	15.22	0.99%	9.01	-	4.42	N/A	28.21	28.03	27.98	27.66	27.87	27.82	27.51	27.77	N/A
93	355+72.65	13.00	L	2.99	-	2.71	3.45	-	3.97	19.75	0.10%	7.64	-	5.5	N/A	27.64	27.66	27.62	27.30	27.64	27.59	27.28	27.56	N/A
94	356+85.57	13.00	L	2.50	-	2.50	4.13	-	4.21	11.82	1.27%	7.67	-	5.5	N/A	27.15	27.08	27.06	26.75	26.96	26.92	26.60	26.86	N/A
95	357+25.54	13.00	L	2.50	-	2.50	4.32	-	4.17	10.65	0.47%	7.67	-	5.5	N/A	26.75	26.74	26.69	26.37	26.64	26.63	26.32	26.71	N/A
96	357+42.89	13.00	R	3.00	-	3.00	4.13	-	3.96	16.80	0.42%	7.67	-	9	N/A	26.31	26.15	26.10	25.77	26.18	26.15	25.84	26.43	N/A
97	357+69.54	13.00	L	3.11	-	3.11	3.95	-	4.11	10.89	1.65%	7.66	-	5.5	N/A	26.56	26.52	26.47	26.14	26.29	26.27	25.96	26.34	N/A

File: C:\PW\WORKING\EAST01\D0786396\8412R_HD_(ROADWAY DETAILS).DWG Plotted: 4/25/2022 11:10:59 AM

ISSUED FOR BID

HDR ENGINEERING, INC.
99 HIGH STREET, SUITE 2300
BOSTON, MASSACHUSETTS 02110–2378
(617) 357–7700

COMMONWEALTH OF MASSACHUSETTS
PHILIP FUSCO
CIVIL
No. 45868
REGISTERED PROFESSIONAL ENGINEER

Scale			
Date			
Job No.			
Designed by			
Drawn by			
Checked by	No.	Description	Date
Approved by	REVISIONS		

THE WORKS — CAMBRIDGE DEPARTMENT OF PUBLIC

Client	CITY OF CAMBRIDGE, MA
Project	RIVER STREET INFRASTRUCTURE AND STREETSCAPE PROJECT
Drawing	**DRIVEWAY DETAILS - 2**
Sheet	RD-1.12
Total Sheets	381
File No.	

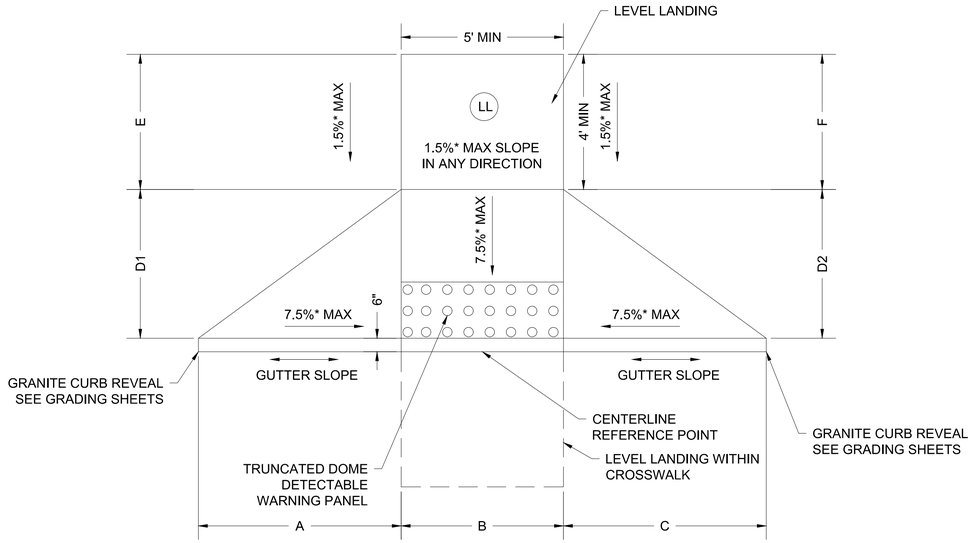

* LL: LEVEL LANDING

TYPE 1: PEDESTRIAN CEMENT CONCRETE RAMP

NOT TO SCALE

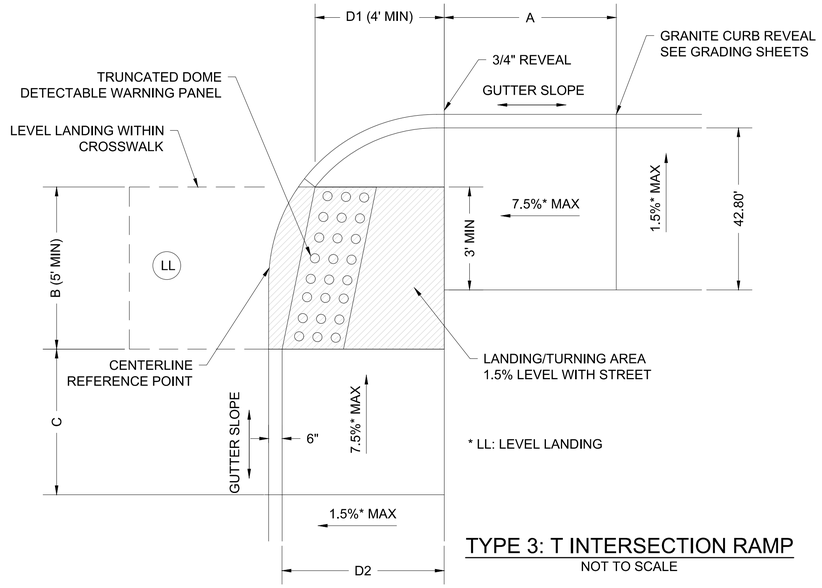

* LL: LEVEL LANDING

TYPE 3: T INTERSECTION RAMP

NOT TO SCALE

PEDESTRIAN RAMP DATA

	RAMP REFERENCE POINT			TRANS L	TRANS W	TRANS R	RAMP LENGTH		LANDING LENGTH	
RAMP #	STATION	OFFSET		A	B	C	D1	D2	E	F
67	320+04.29	22.66	L	5.07	5.00	6.91	4.00	4.00	4.00	4.00
74	310+68.27	20.26	R	6.50	5.00	7.03	3.84	3.97	3.75	3.57
83	365+21.58	13.45	R	2.80	4.99	4.90	2.00	2.00	3.60	3.56
84	353+25.55	13.01	R	9.56	5.00	3.33	2.00	2.00	4.07	4.18
85	353+24.10	13.00	L	N/A	5.00	6.91	2.00	1.99	4.09	4.06
86	365+66.89	13.33	R	7.24	5.00	N/A	2.04	2.00	4.11	4.33

	RAMP REFERENCE POINT			TRANS L	TRANS W	TRANS R	RAMP LENGTH	
RAMP #	STATION	OFFSET		A	B	C	D1	D2
68	320+20.94	10.00	L	N/A	9.87	7.50	4.77	4.64
69	320+20.88	10.00	R	7.5	9.87	N/A	5.35	5.23
70	324+38.71	10.00	L	10.5	7.50	12.25	5.70	4.62
71	324+38.91	10.00	R	9.76	7.81	10.50	4.33	4.27
72	0+54.13	9.87	L	9.5	8.00	8.88	3.99	4.12
73	0+54.15	10.05	R	16.49	8.00	9.50	4.47	4.25
75	310+56.32	10.00	R	7.67	8.00	10.50	4.04	4.01
76	310+56.68	10.00	L	11	7.31	8.62	4.44	9.19
77	334+03.48	9.50	R	7.72	8.01	10.52	4.46	4.38
78	334+03.50	9.50	L	10.45	8.00	8.09	4.19	4.35
79	343+31.13	9.50	R	10.84	8.00	10.50	5.45	5.49
80	343+31.01	9.50	L	10.5	7.99	10.29	4.14	4.58
81	352+84.05	20.93	R	11.97	8.09	11.96	6.91	7.46
82	352+81.68	20.27	L	7.62	7.11	9.53	5.73	6.21
87	358+21.62	13.00	R	13.53	8.00	10.50	6.08	6.14
88	358+21.76	13.00	L	10.5	8.00	13.73	6.24	6.00

NOTES:
1. SEE CONSTRUCTION PLANS AND CURB TIE PLANS FOR LOCATION OF RAMPS.
2. FINAL RAMP ELEVATIONS SHALL GRADE TO DRAIN AND LAYOUT SHALL BE APPROVED BY ENGINEER PRIOR TO PLACEMENT.
3. ALL PEDESTRIAN RAMP GRADES SHALL CONFORM TO THE LATEST EDITION OF MASSDOT CONSTRUCTION STANDARD.
4. * = TOLERANCE FOR CONSTRUCTION ± 0.5%

ISSUED FOR BID

HDR ENGINEERING, INC.
99 HIGH STREET, SUITE 2300
BOSTON, MASSACHUSETTS 02110–2378
(617) 357–7700

COMMONWEALTH OF MASSACHUSETTS
PHILIP FUSCO
CIVIL
No. 45868
REGISTERED PROFESSIONAL ENGINEER

Scale			
Date			
Job No.			
Designed by			
Drawn by			
Checked by	No.	Description	Date
Approved by		REVISIONS	

CAMBRIDGE DEPARTMENT OF PUBLIC WORKS

Client: CITY OF CAMBRIDGE, MA	Sheet: RD-1.13
Project: RIVER STREET INFRASTRUCTURE AND STREETSCAPE PROJECT	Total Sheets: 381
Drawing: **RAMP DETAILS - 3**	File No.

File: C:\PWWORKING\EAST01\D0786396\I8412R_HD_(ROADWAY DETAILS).DWG Plotted: 4/25/2022 11:02:16 AM

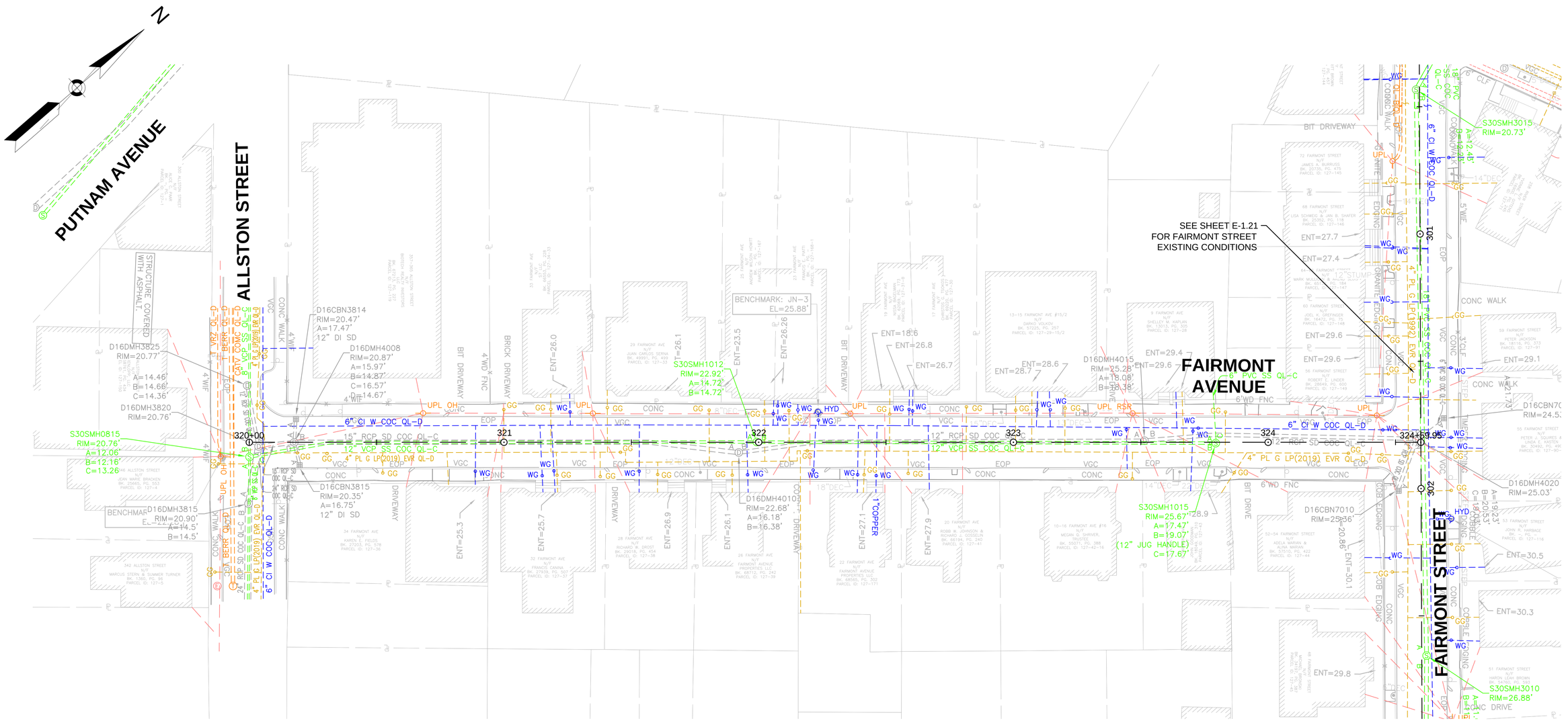

PLAN

0 20 50 100

SCALE: 1" = 20'

ISSUED FOR BID

HDR ENGINEERING, INC.
99 HIGH STREET, SUITE 2300
BOSTON, MASSACHUSETTS 02110–2378
(617) 357–7700

BSI ENGINEERING
CIVIL & SUBSURFACE UTILITY ENGINEERING
100 Hallet St
Boston, MA 02124
T: (617) 265 4200
F: (617) 209 1297
www.bsieng.com

FELDMAN LAND SURVEYORS
FELDMAN LAND SURVEYORS
152 HAMPDEN STREET
BOSTON, MASS. 02119
PHONE: (617)357-9740
www.feldmansurveyors.com

COMMONWEALTH OF MASSACHUSETTS
PHILIP FUSCO
CIVIL
No. 45868
REGISTERED PROFESSIONAL ENGINEER

Scale			
Date			
Job No.			
Designed by			
Drawn by			
Checked by	No.	Description	Date
Approved by	REVISIONS		

THE WORKS — CAMBRIDGE DEPARTMENT OF PUBLIC WORKS

Client: CITY OF CAMBRIDGE, MA	Sheet: EX-1.20
Project: RIVER STREET INFRASTRUCTURE AND STREETSCAPE PROJECT	Total Sheets: 381
Drawing: **EXISTING CONDITIONS - 20**	File No.

4/19/2022 1:41:42 PM

File: C:\PWWORKING\EAST\01\D0786396\8412R_HD(CNS_EXISTING CONDITIONS).DWG Plotted:

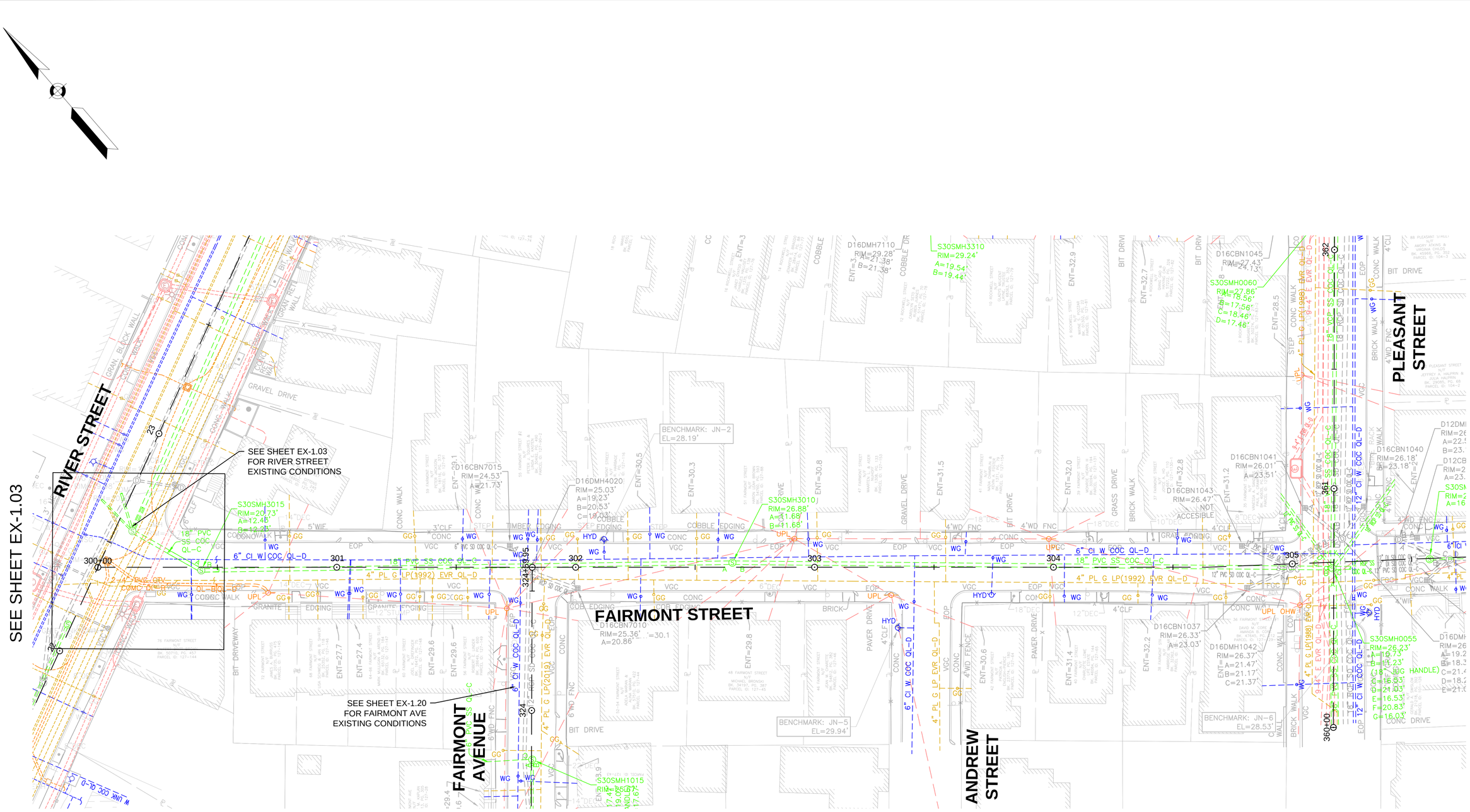

ISSUED FOR BID

HDR ENGINEERING, INC. 99 HIGH STREET, SUITE 2300 BOSTON, MASSACHUSETTS 02110-2378 (617) 357-7700	BSI ENGINEERING CIVIL & SUBSURFACE UTILITY ENGINEERING 100 Hallet St, Boston, MA 02124 T: (617) 265 4200 F: (617) 209 1297 www.bsieng.com	FELDMAN LAND SURVEYORS FELDMAN LAND SURVEYORS 152 HAMPDEN STREET BOSTON, MASS. 02119 PHONE: (617)357-9740 www.feldmansurveyors.com	COMMONWEALTH OF MASSACHUSETTS PHILIP FUSCO CIVIL No. 45868 REGISTERED PROFESSIONAL ENGINEER

Scale				
Date				
Job No.				
Designed by				
Drawn by				
Checked by	No.	Description	Date	
Approved by	REVISIONS			

THE WORKS — CAMBRIDGE DEPARTMENT OF PUBLIC WORKS

Client	CITY OF CAMBRIDGE, MA
Project	RIVER STREET INFRASTRUCTURE AND STREETSCAPE PROJECT
Drawing	**EXISTING CONDITIONS - 21**
Sheet	EX-1.21
Total Sheets	381
File No.	

File: C:\PWWORKING\EAST01\D07863961\8412R_HD\CNS_EXISTING CONDITIONS).DWG Plotted: 4/19/2022 1:41:47 PM

File: C:\PW\WORKING\EAST01\D0786396\8412R_HD\CNS_EXISTING CONDITIONS).DWG Plotted: 4/19/2022 1:41:52 PM

SEE SHEETEX-1.21

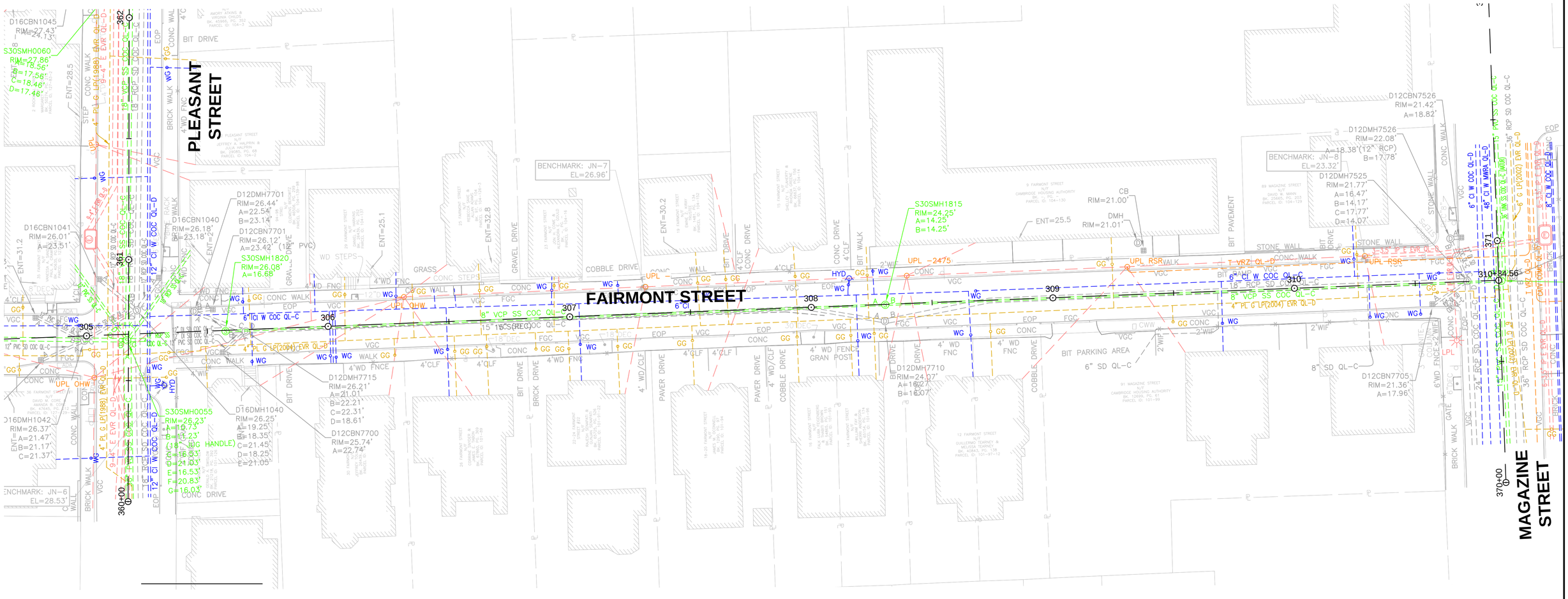

PLAN

0 20 50 100

SCALE: 1" = 20'

ISSUED FOR BID

HDR ENGINEERING, INC.
99 HIGH STREET, SUITE 2300
BOSTON, MASSACHUSETTS 02110–2378
(617) 357–7700

BSI ENGINEERING
CIVIL & SUBSURFACE UTILITY ENGINEERING
100 Hallet St
Boston, MA 02124
T: (617) 265 4200
F: (617) 209 1297
www.bsieng.com

FELDMAN LAND SURVEYORS
FELDMAN LAND SURVEYORS
152 HAMPDEN STREET
BOSTON, MASS. 02119
PHONE: (617)357-9740
www.feldmansurveyors.com

COMMONWEALTH OF MASSACHUSETTS
PHILIP FUSCO CIVIL No. 45868
REGISTERED PROFESSIONAL ENGINEER

Scale			
Date			
Job No.			
Designed by			
Drawn by			
Checked by	No.	Description	Date
Approved by	REVISIONS		

CAMBRIDGE DEPARTMENT OF PUBLIC WORKS

Client	CITY OF CAMBRIDGE, MA	Sheet	EX-1.22
Project	RIVER STREET INFRASTRUCTURE AND STREETSCAPE PROJECT	Total Sheets	381
Drawing	**EXISTING CONDITIONS - 22**	File No.	

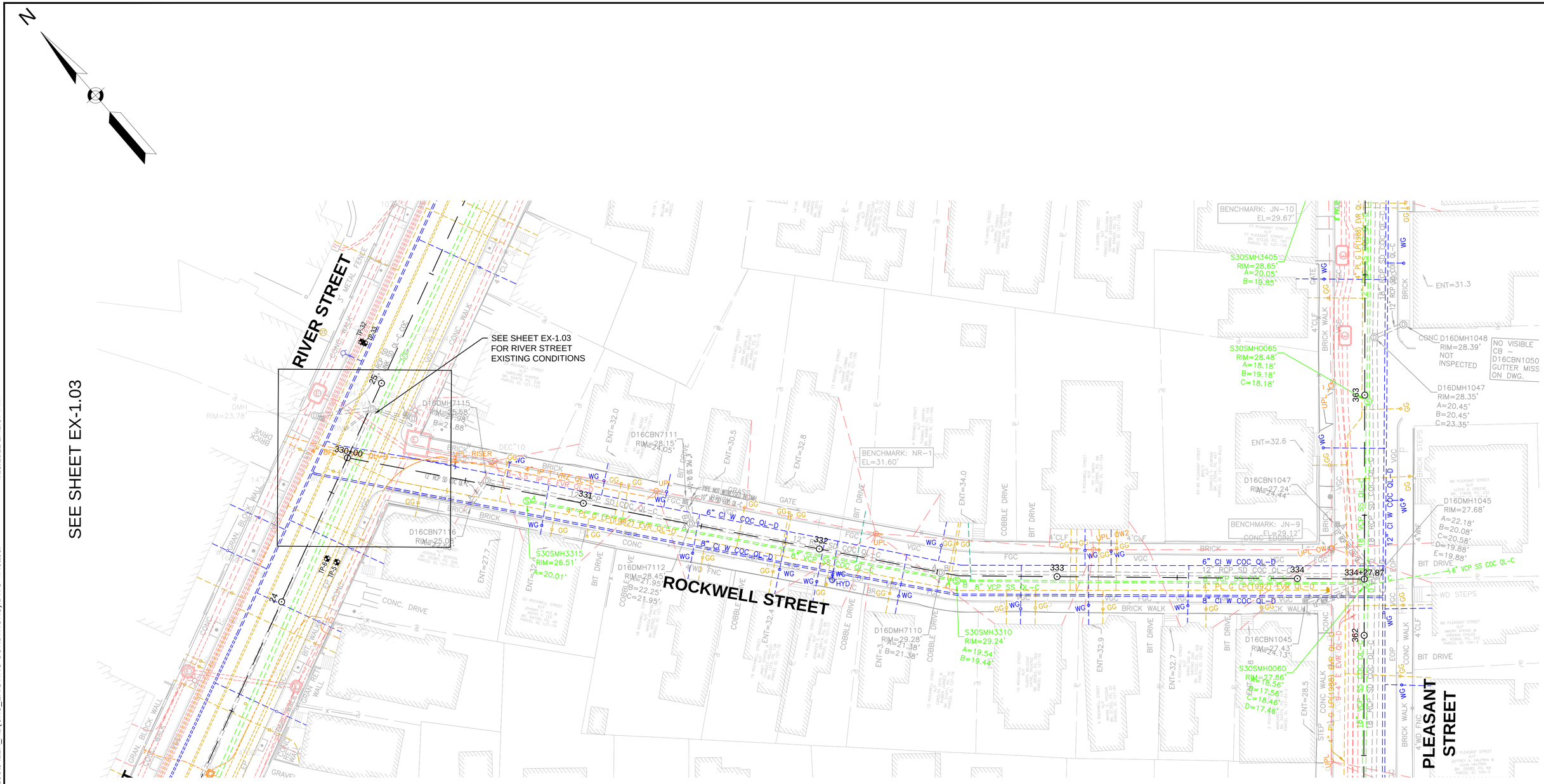
N
SEE SHEET EX-1.03
RIVER STREET
ROCKWELL STREET
PLEASANT STREET
SEE SHEET EX-1.03 FOR RIVER STREET EXISTING CONDITIONS
BENCHMARK: JN-10
EL=29.67'
BENCHMARK: NR-1
EL=31.60'
BENCHMARK: JN-9
EL=29.12'
S30SMH3405
RIM=28.65'
A=20.05'
B=19.85'
S30SMH0065
RIM=28.48'
A=18.18'
B=19.18'
C=18.18'
S30SMH3315
RIM=26.51'
A=20.01'
S30SMH3310
RIM=29.24'
A=19.54'
B=19.44'
S30SMH0060
RIM=27.86'
A=18.56'
B=17.56'
C=18.46'
D=17.46'
D16DMH7115
RIM=25.58'
D16DMH1047
RIM=28.35'
A=20.45'
B=20.45'
C=23.35'
D16DMH1048
RIM=28.39'
NOT INSPECTED
D16DMH1045
RIM=27.68'
A=22.18'
B=20.08'
C=20.58'
D=19.88'
E=19.88'
D16DMH7112
RIM=28.45'
D16DMH7110
RIM=29.28'
D16CBN7111
RIM=28.15'
D16CBN7116
RIM=25.08'
D16CBN1047
RIM=27.24'
D16CBN1045
RIM=27.43'
NO VISIBLE CB - D16CBN1050 GUTTER MISS ON DWG.
330
331
332
333
334
334+27.87
362
363
24
25
ENT=31.3
ENT=32.6
ENT=32.0
ENT=32.8
ENT=30.5
ENT=34.0
ENT=32.9
ENT=32.7
ENT=28.5
ENT=27.7
12" RCP SD COC QL-C
8" VCP SS COC QL-C
6" CI W COC QL-D
4" PLC LP(1992) EVR QL-D
8" CI W COC QL-D
12" RCP SD COC QL-C
18" VCP SS COC QL-C
18" RCP SD COC QL-C
6" VCP SS COC QL-C
4" PLC LP(1988) EVR QL-C
4" PLC LP(1992) EVR QL-D
8" VCP SS COC QL-C
4" PLC LP(1992) EVR QL-C
4" PLC LP(1992) EVR QL-D
8" CI W COC QL-D
12" RCP SD COC QL-C
18" VCP SS COC QL-C
18" RCP SD COC QL-C
6" VCP SS COC QL-C
4" PLC LP(1988) EVR QL-C
4" PLC LP(1992) EVR QL-D
8" CI W COC QL-D
12" CI W COC QL-D
6" VCP SS COC QL-C
4" PLC LP(1992) EVR QL-D
8" CI W COC QL-D
8" VCP SS COC

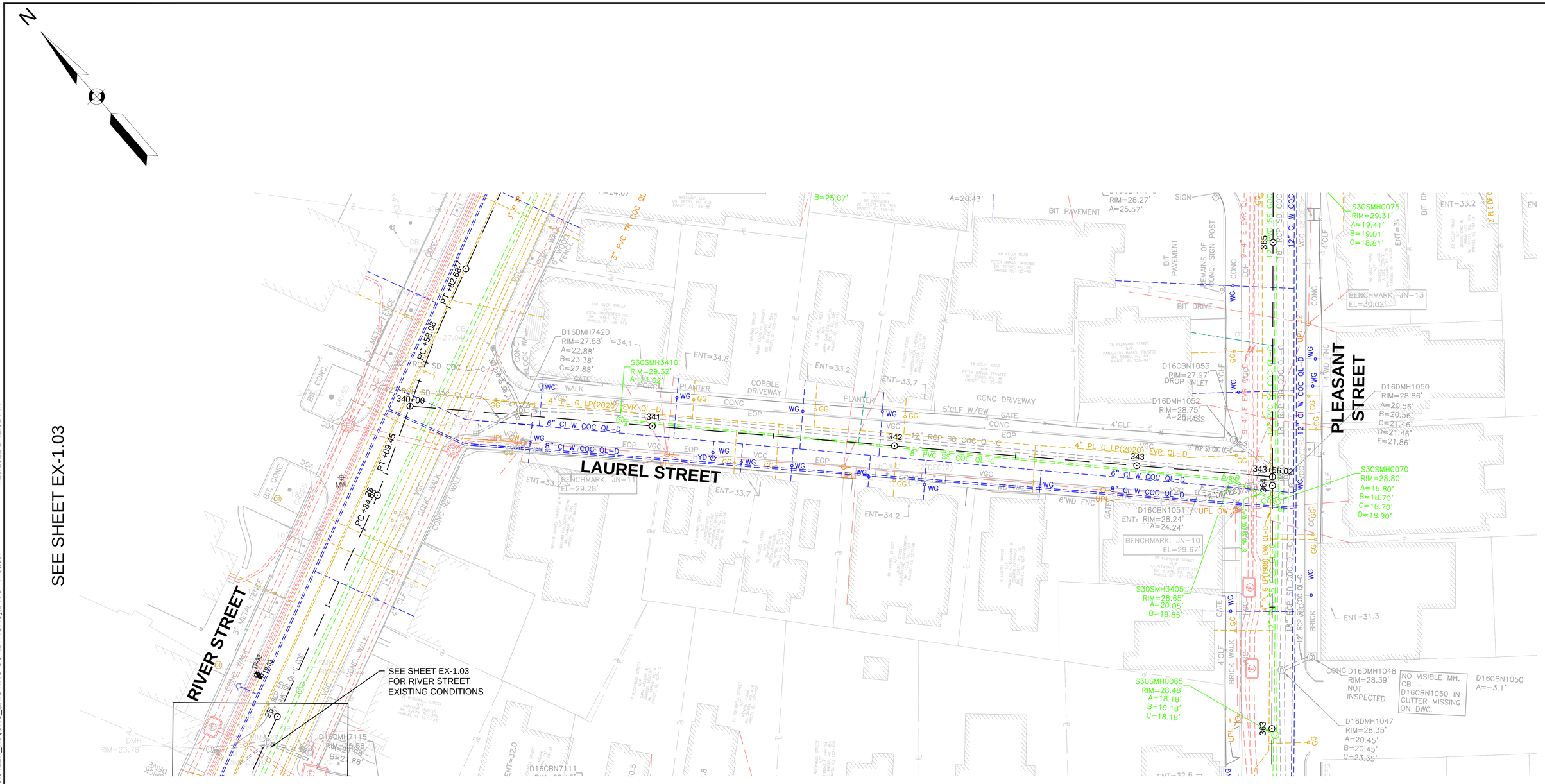

PLAN

0 20 50 100

SCALE: 1" = 20'

ISSUED FOR BID

HDR ENGINEERING, INC.
99 HIGH STREET, SUITE 2300
BOSTON, MASSACHUSETTS 02110-2378
(617) 357-7700

BSI ENGINEERING
CIVIL & SUBSURFACE UTILITY ENGINEERING
100 Hallet St
Boston, MA 02124
T: (617) 265 4200
F: (617) 209 1297
www.bsieng.com

FELDMAN LAND SURVEYORS
FELDMAN LAND SURVEYORS
152 HAMPDEN STREET
BOSTON, MASS. 02119
PHONE: (617)357-9740
www.feldmansurveyors.com

Scale			
Date			
Job No.			
Designed by			
Drawn by			
Checked by	No.	Description	Date
Approved by	REVISIONS		

THE WORKS — CAMBRIDGE DEPARTMENT OF PUBLIC WORKS

Client	CITY OF CAMBRIDGE, MA	Sheet	EX-1.24
Project	RIVER STREET INFRASTRUCTURE AND STREETSCAPE PROJECT	Total Sheets	381
Drawing	**EXISTING CONDITIONS - 24**	File No.	

File: C:\PWWORKING\EAST\D0786396\8412R_HD\CNS_EXISTING CONDITIONS).DWG Plotted: 4/19/2022 1:42:02 PM

File: C:\PWORKING\EAST01\D0786396\8412R_HD\CNS_EXISTING CONDITIONS\.DWG Plotted: 4/19/2022 1:42:07 PM

N

SEE SHEET EX-1.03 & EX-1.04

SEE SHEET EX-1.26

RIVER STREET

HOWARD STREET

PLEASANT STREET

KELLY ROAD

SEE SHEET EX-1.04 FOR RIVER STREET EXISTING CONDITIONS

SEE SHEET EX-1.03 FOR RIVER STREET EXISTING CONDITIONS

BENCHMARK: JN-14
EL=29.15'

BENCHMARK: JN-12
EL=30.01'

BENCHMARK: JN-13
EL=30.02'

D16CBN7424
RIM=27.88'
A=25.68'

D16DMH7420
RIM=28.25'
A=23.85'

D16CBN7420
RIM=28.07'
A=24.67'

D16DMH7415
RIM=28.41'
A=24.21'
B=21.71'
C=21.61'

D16DMH7410
RIM=28.68'
A=24.78'
B=21.78'
C=21.68'

D16CBN7411
RIM=27.93'
A=26.43'

D16CBN1055
RIM=28.52'
A=25.52'

D16CBN7410
RIM=28.27'
A=25.57'

D16CBN1056
RIM=28.48'
A=24.88'

D16DMH1057
RIM=29.33'
A=24.33'
B=21.53'
C=24.33'
D=21.43'

S30SMH2010
RIM=28.44'
A=19.84'

D16DMH1055
RIM=29.28'
A=21.38'
B=21.38'
C=21.28'

S30SMH0075
RIM=29.31'
A=19.41'
B=19.01'
C=18.81'

D12DMH7915
RIM=28.33'
A=21.33'

S30SMH3510
RIM=28.47'
A=19.97'
B=25.07'

D16DMH7420

PLAN

0 20 50 100

SCALE: 1" = 20'

ISSUED FOR BID

HDR ENGINEERING, INC.
99 HIGH STREET, SUITE 2300
BOSTON, MASSACHUSETTS 02110-2378
(617) 357-7700

BSI ENGINEERING
CIVIL & SUBSURFACE UTILITY ENGINEERING
100 Hallet St
Boston, MA 02124
T: (617) 265 4200
F: (617) 209 1297
www.bsieng.com

FELDMAN LAND SURVEYORS
FELDMAN LAND SURVEYORS
152 HAMPDEN STREET
BOSTON, MASS. 02119
PHONE: (617)357-9740
www.feldmansurveyors.com

COMMONWEALTH OF MASSACHUSETTS
PHILIP FUSCO
CIVIL
No. 45868
REGISTERED PROFESSIONAL ENGINEER

Scale			
Date			
Job No.			
Designed by			
Drawn by			
Checked by	No.	Description	Date
Approved by	REVISIONS		

THE WORKS
CAMBRIDGE DEPARTMENT OF PUBLIC

Client	CITY OF CAMBRIDGE, MA
Project	RIVER STREET INFRASTRUCTURE AND STREETSCAPE PROJECT
Drawing	**EXISTING CONDITIONS - 25**
Sheet	EX-1.25
Total Sheets	381
File No.	

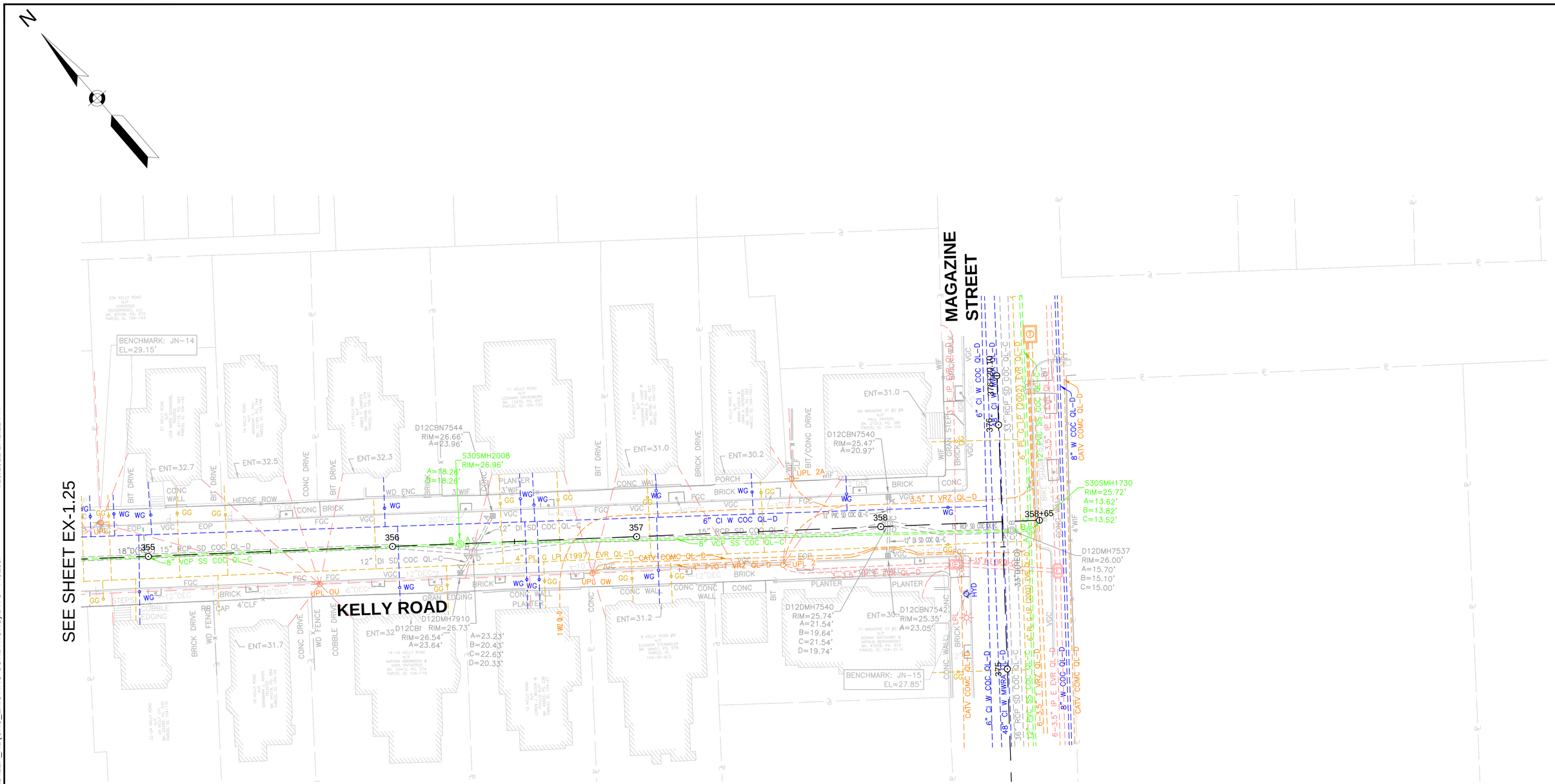

PLAN

0 20 50 100

SCALE: 1" = 20'

ISSUED FOR BID

HDR ENGINEERING, INC.
99 HIGH STREET, SUITE 2300
BOSTON, MASSACHUSETTS 02110-2378
(617) 357-7700

BSI ENGINEERING
CIVIL & SUBSURFACE UTILITY ENGINEERING
100 Hallet St
Boston, MA 02124
T: (617) 265 4200
F: (617) 209 1297
www.bsieng.com

FELDMAN LAND SURVEYORS
FELDMAN LAND SURVEYORS
152 HAMPDEN STREET
BOSTON, MASS. 02119
PHONE: (617)357-9740
www.feldmansurveyors.com

COMMONWEALTH OF MASSACHUSETTS
PHILIP FUSCO
CIVIL
No. 45868
REGISTERED PROFESSIONAL ENGINEER

Scale			
Date			
Job No.			
Designed by			
Drawn by			
Checked by	No.	Description	Date
Approved by	REVISIONS		

THE WORKS — CAMBRIDGE DEPARTMENT OF PUBLIC WORKS

Client	CITY OF CAMBRIDGE, MA	Sheet	EX-1.26
Project	RIVER STREET INFRASTRUCTURE AND STREETSCAPE PROJECT	Total Sheets	381
Drawing	**EXISTING CONDITIONS - 26**	File No.	

File: C:\PWWORKING\EAST\D1D07863968412R_HD\CNS_EXISTING CONDITIONS).DWG Plotted: 4/19/2022 1:42:12 PM

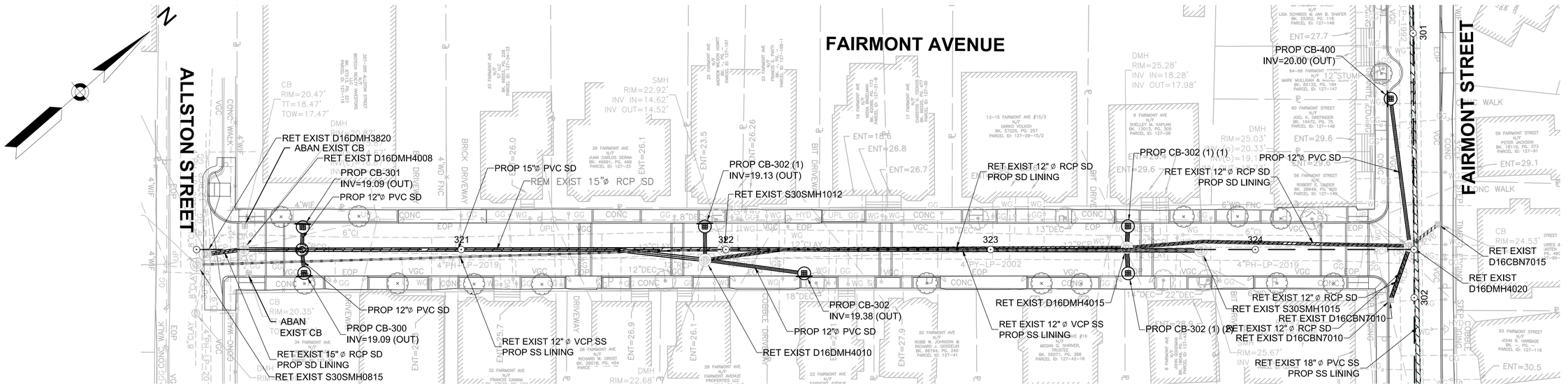

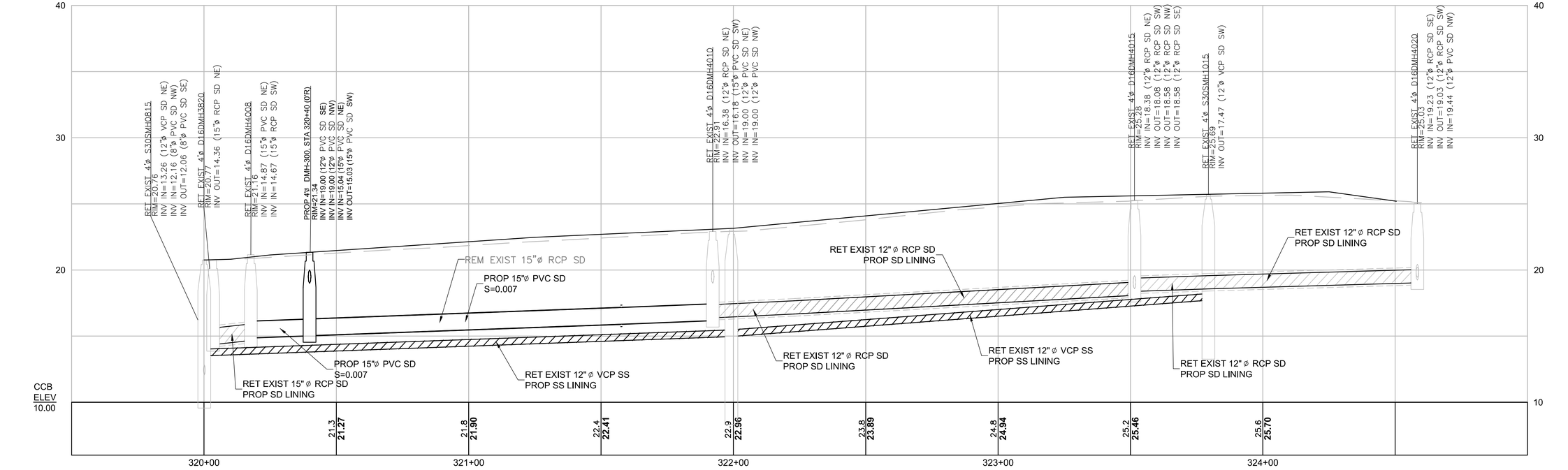

PLAN AND PROFILE - FAIRMONT AVENUE

HOR, SCALE IN FEET
20 0 20 40

VER. SCALE IN FEET
4 0 4 8

NOTE:
1. SEE SHEET CD-1.10 FOR CNS CATCH BASIN SCHEDULE.

HDR ENGINEERING, INC.
99 HIGH STREET, SUITE 2300
BOSTON, MASSACHUSETTS 02110-2378
(617) 357-7700

Scale			
Date			
Job No.			
Designed by			
Drawn by	0	CONFORMED SET	8/5/2022
Checked by	No.	Description	Date
Approved by	REVISIONS		

CAMBRIDGE DEPARTMENT OF PUBLIC WORKS

Client: CITY OF CAMBRIDGE, MA
Project: RIVER STREET INFRASTRUCTURE AND STREETSCAPE PROJECT
Drawing: CIVIL CONSTRUCTION PLAN AND PROFILE- 20
Sheet: C-1.20
Total Sheets: 381
File No.

File: C:\PW\WORKING\EAST01\D0786396\8412R_HD\CNS_CIVIL CONSTRUCTION PLAN AND PROFILE).DWG Plotted: 10/17/2022 10:12:31 AM

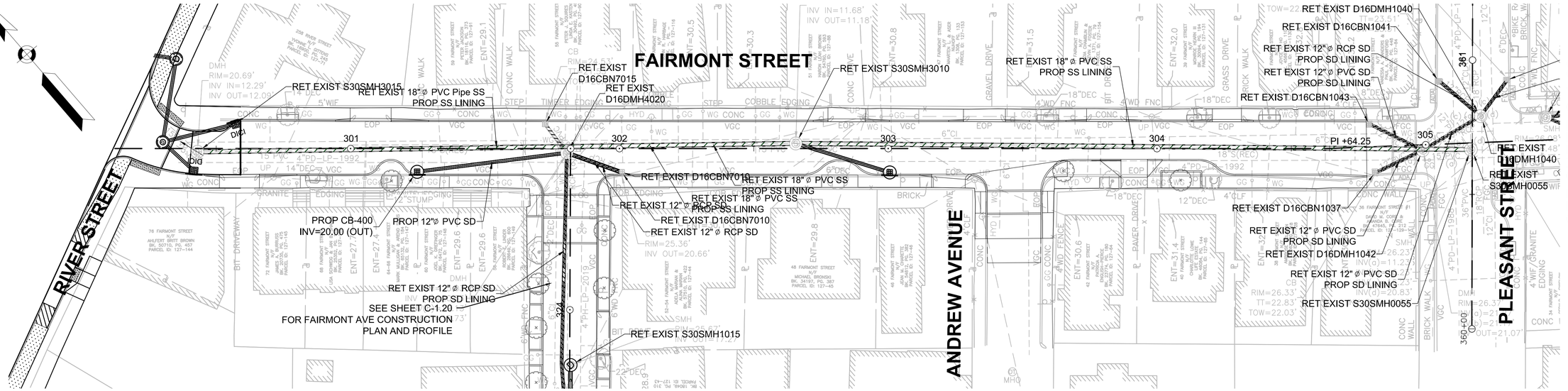

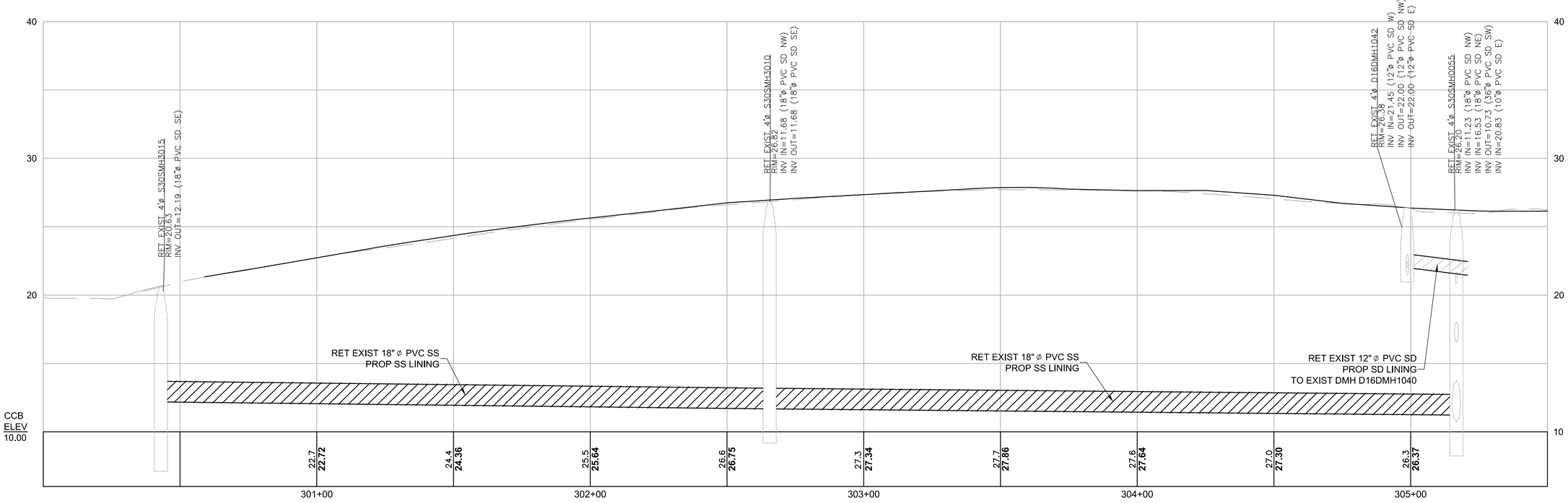

PLAN AND PROFILE - FAIRMONT STREET

HOR. SCALE IN FEET
20 0 20 40
VER. SCALE IN FEET
4 0 4 8

NOTE:
1. SEE SHEET CD-1.10 FOR CNS CATCH BASIN SCHEDULE.

HDR ENGINEERING, INC.
99 HIGH STREET, SUITE 2300
BOSTON, MASSACHUSETTS 02110-2378
(617) 357-7700

Scale			
Date			
Job No.			
Designed by			
Drawn by	0	CONFORMED SET	8/5/2022
Checked by	No.	Description	Date
Approved by	REVISIONS		

THE WORKS — CAMBRIDGE DEPARTMENT OF PUBLIC

Client	CITY OF CAMBRIDGE, MA
Project	RIVER STREET INFRASTRUCTURE AND STREETSCAPE PROJECT
Drawing	**CIVIL CONSTRUCTION PLAN AND PROFILE- 21**
Sheet	C-1.21
Total Sheets	381
File No.	

File: C:\PW\WORKING\EAST01\D0786396\8412R_HD\CNS_CIVIL CONSTRUCTION PLAN AND PROFILE).DWG Plotted: 10/17/2022 10:12:56 AM

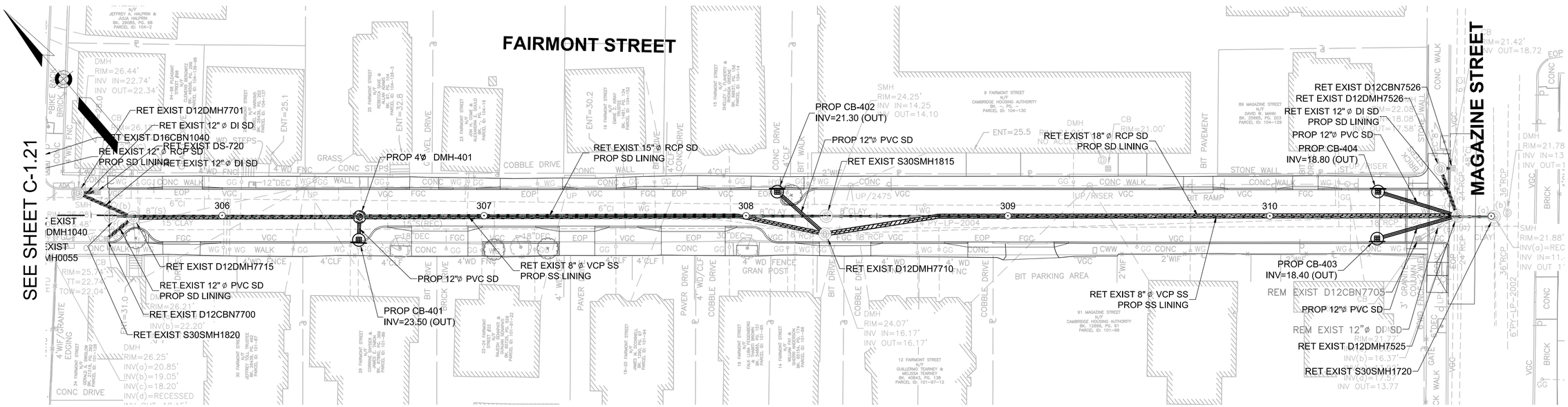

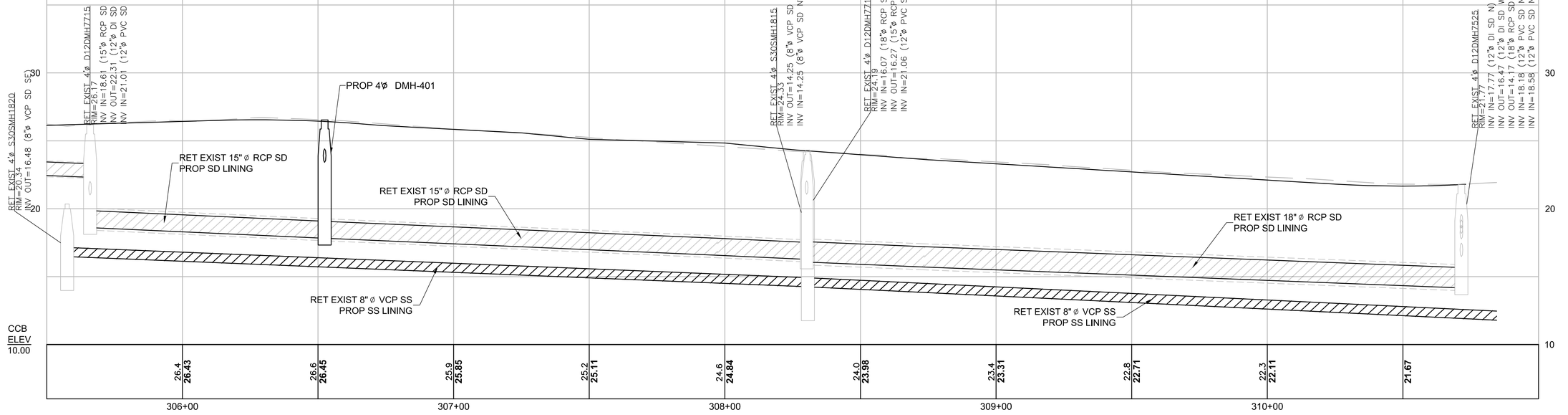

PLAN AND PROFILE - FAIRMONT STREET

HOR. SCALE IN FEET
20 0 20 40
VER. SCALE IN FEET
4 0 4 8

NOTE:
1. SEE SHEET CD-1.10 FOR CNS CATCH BASIN SCHEDULE.

HDR ENGINEERING, INC.
99 HIGH STREET, SUITE 2300
BOSTON, MASSACHUSETTS 02110–2378
(617) 357–7700

Scale			
Date			
Job No.			
Designed by			
Drawn by	0	CONFORMED SET	8/5/2022
Checked by	No.	Description	Date
Approved by	REVISIONS		

THE WORKS — CAMBRIDGE DEPARTMENT OF PUBLIC WORKS

Client	CITY OF CAMBRIDGE, MA
Project	RIVER STREET INFRASTRUCTURE AND STREETSCAPE PROJECT
Drawing	**CIVIL CONSTRUCTION PLAN AND PROFILE- 22**
Sheet	C-1.22
Total Sheets	381
File No.	

File: C:\PWWORKING\EAST01\D0786396\8412R_HD\CNS_CIVIL CONSTRUCTION PLAN AND PROFILE).DWG Plotted: 10/17/2022 10:13:23 AM

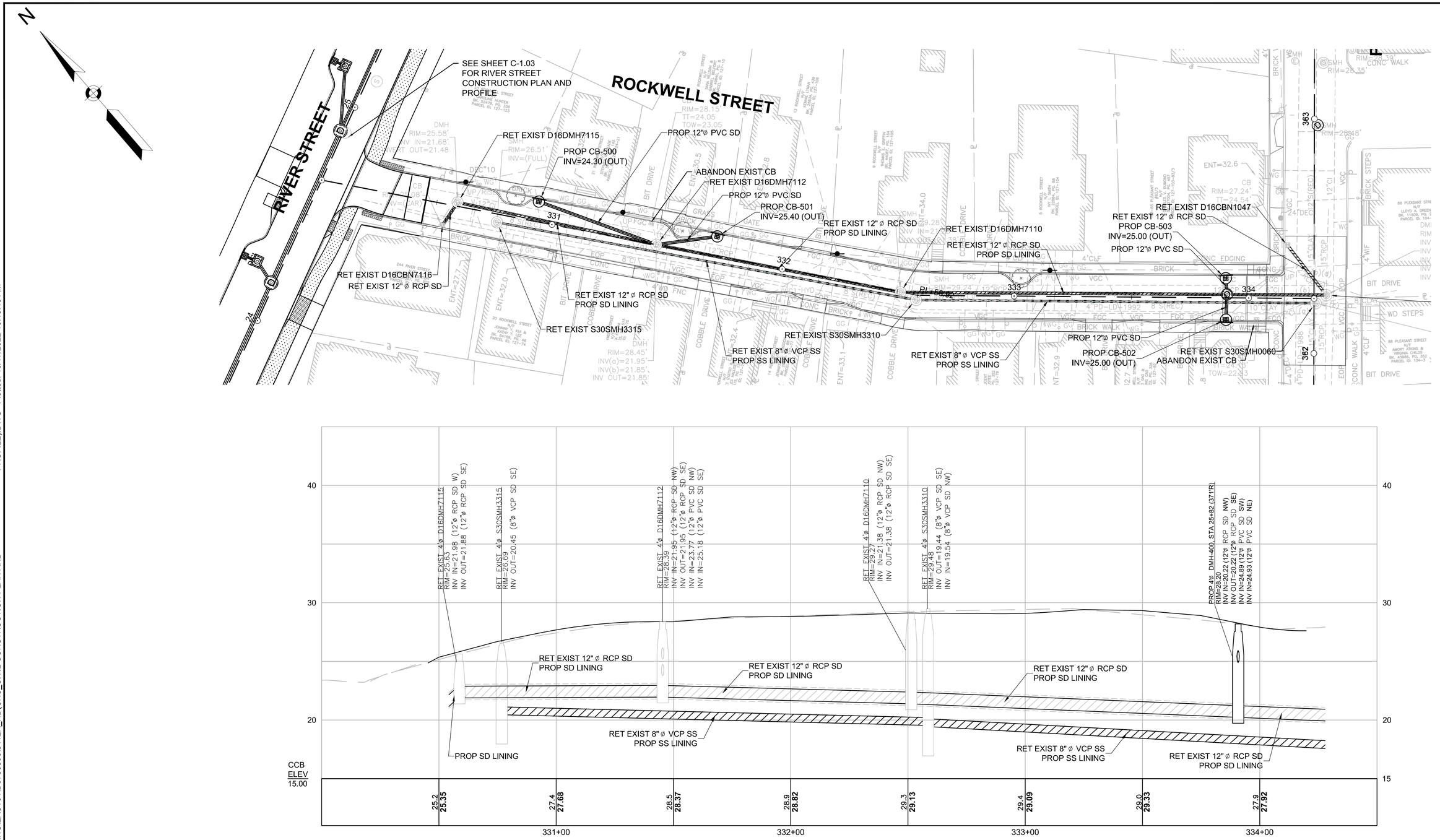

PLAN AND PROFILE - ROCKWELL STREET

HOR. SCALE IN FEET
20 0 20 40
VER. SCALE IN FEET
4 0 4 8

NOTE:
1. SEE SHEET CD-1.10 FOR CNS CATCH BASIN SCHEDULE.

HDR ENGINEERING, INC.
99 HIGH STREET, SUITE 2300
BOSTON, MASSACHUSETTS 02110-2378
(617) 357-7700

Scale			
Date			
Job No.			
Designed by			
Drawn by	0	CONFORMED SET	8/5/2022
Checked by	No.	Description	Date
Approved by	REVISIONS		

CAMBRIDGE DEPARTMENT OF PUBLIC THE WORKS

Client	CITY OF CAMBRIDGE, MA
Project	RIVER STREET INFRASTRUCTURE AND STREETSCAPE PROJECT
Drawing	**CIVIL CONSTRUCTION PLAN AND PROFILE- 23**
Sheet	C-1.23
Total Sheets	381
File No.	

File: C:\PW\WORKING\EAST01\D0786396\8412R_HD\CNS_CIVIL CONSTRUCTION PLAN AND PROFILE).DWG Plotted: 10/17/2022 10:13:45 AM

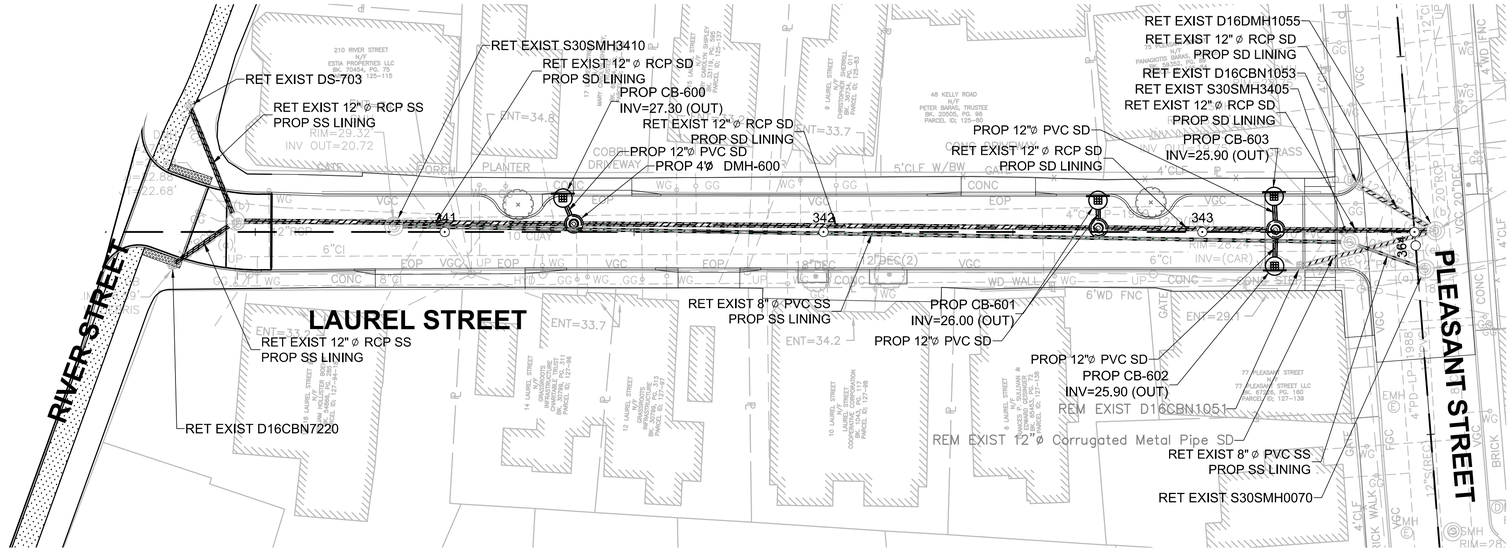

PLAN AND PROFILE - LAUREL STREET

HOR. SCALE IN FEET
20 0 20 40
4 0 4 8
VER. SCALE IN FEET

NOTE:
1. SEE SHEET CD-1.10 FOR CNS CATCH BASIN SCHEDULE.

HDR ENGINEERING, INC.
99 HIGH STREET, SUITE 2300
BOSTON, MASSACHUSETTS 02110–2378
(617) 357–7700

Scale			
Date			
Job No.			
Designed by			
Drawn by	0	CONFORMED SET	8/5/2022
Checked by	No.	Description	Date
Approved by	REVISIONS		

THE WORKS — CAMBRIDGE DEPARTMENT OF PUBLIC WORKS

Client	CITY OF CAMBRIDGE, MA
Project	RIVER STREET INFRASTRUCTURE AND STREETSCAPE PROJECT
Drawing	**CIVIL CONSTRUCTION PLAN AND PROFILE- 24**
Sheet	C-1.24
Total Sheets	381
File No.	

File: C:\PW\WORKING\EAST01\D0786396\8412R_HD\CNS_CIVIL CONSTRUCTION PLAN AND PROFILE).DWG Plotted: 10/17/2022 10:14:11 AM

PROFILE).DWG Plotted: 10/17/2022 10:14:37 AM
File: C:\PW\WORKING\EAST01\D0786396\8412R_HD\CNS_CIVIL CONSTRUCTION PLAN AND

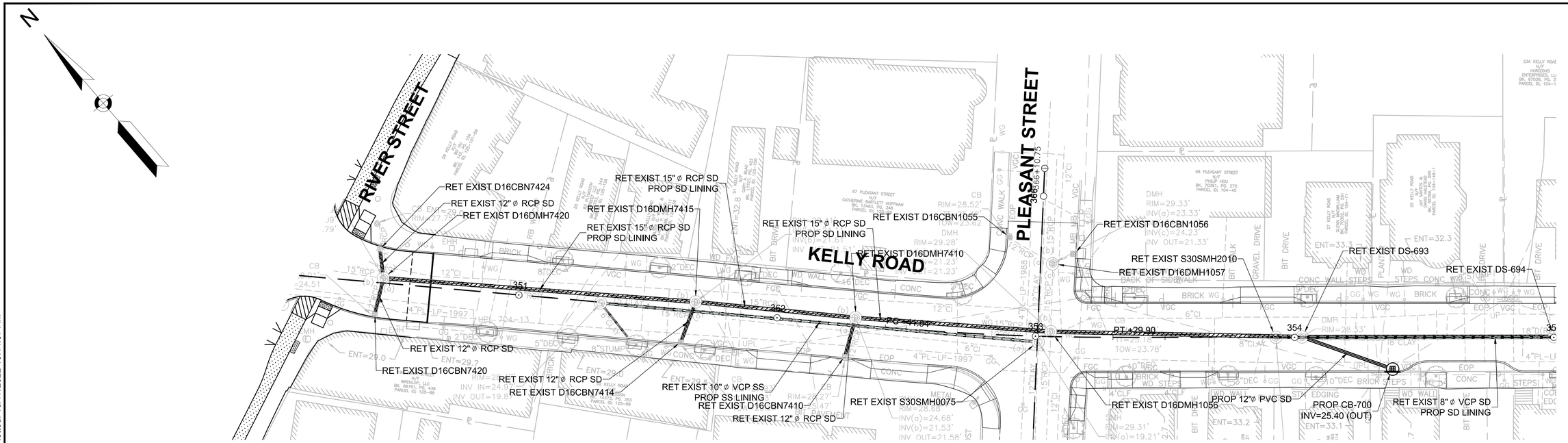

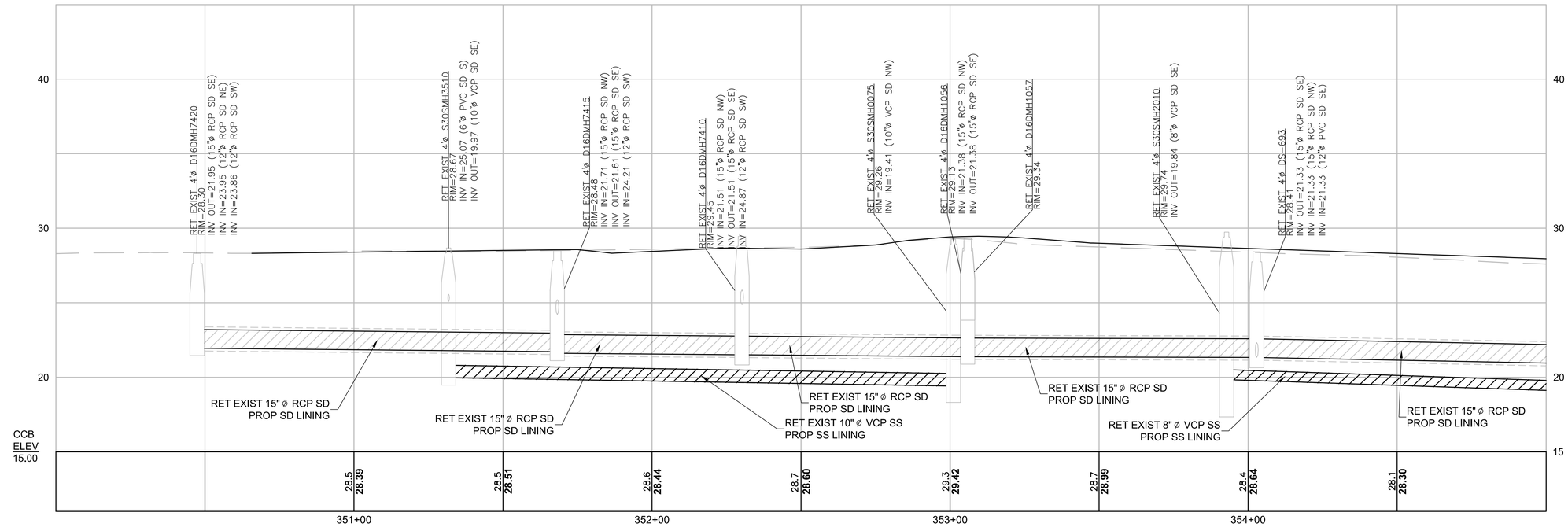

PLAN AND PROFILE - KELLY ROAD

HOR. SCALE IN FEET
20 0 20 40
4 0 4 8
VER. SCALE IN FEET

NOTE:
1. SEE SHEET CD-1.10 FOR CNS CATCH BASIN SCHEDULE.

HDR ENGINEERING, INC.
99 HIGH STREET, SUITE 2300
BOSTON, MASSACHUSETTS 02110-2378
(617) 357-7700

Scale			
Date			
Job No.			
Designed by			
Drawn by	0	CONFORMED SET	8/5/2022
Checked by	No.	Description	Date
Approved by	REVISIONS		

CAMBRIDGE DEPARTMENT OF PUBLIC WORKS

Client	CITY OF CAMBRIDGE, MA
Project	RIVER STREET INFRASTRUCTURE AND STREETSCAPE PROJECT
Drawing	**CIVIL CONSTRUCTION PLAN AND PROFILE- 25**
Sheet	C-1.25
Total Sheets	381
File No.	

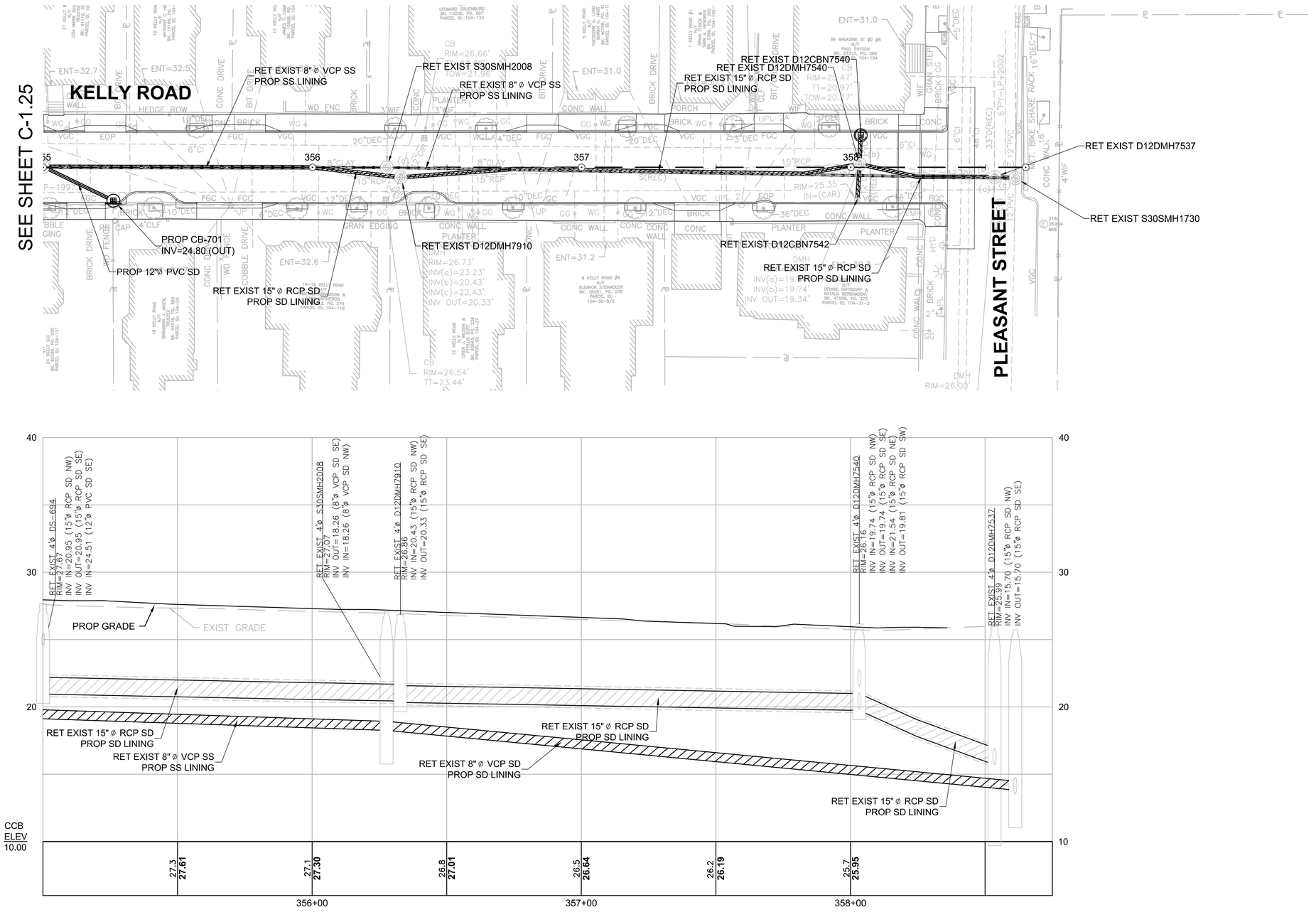

PLAN AND PROFILE - KELLY ROAD

HOR. SCALE IN FEET
20 0 20 40
4 0 4 8
VER. SCALE IN FEET

NOTE:
1. SEE SHEET CD-1.10 FOR CNS CATCH BASIN SCHEDULE.

HDR ENGINEERING, INC.
99 HIGH STREET, SUITE 2300
BOSTON, MASSACHUSETTS 02110-2378
(617) 357-7700

Scale			
Date			
Job No.			
Designed by			
Drawn by	0	CONFORMED SET	8/5/2022
Checked by	No.	Description	Date
Approved by	REVISIONS		

THE WORKS — CAMBRIDGE DEPARTMENT OF PUBLIC WORKS

Client	CITY OF CAMBRIDGE, MA
Project	RIVER STREET INFRASTRUCTURE AND STREETSCAPE PROJECT
Drawing	**CIVIL CONSTRUCTION PLAN AND PROFILE- 26**
Sheet	C-1.26
Total Sheets	381
File No.	

File: C:\PWWORKING\EAST01\D0786396\8412R_HD\CNS_CIVIL CONSTRUCTION PLAN AND PROFILE).DWG Plotted: 10/17/2022 10:18:06 AM

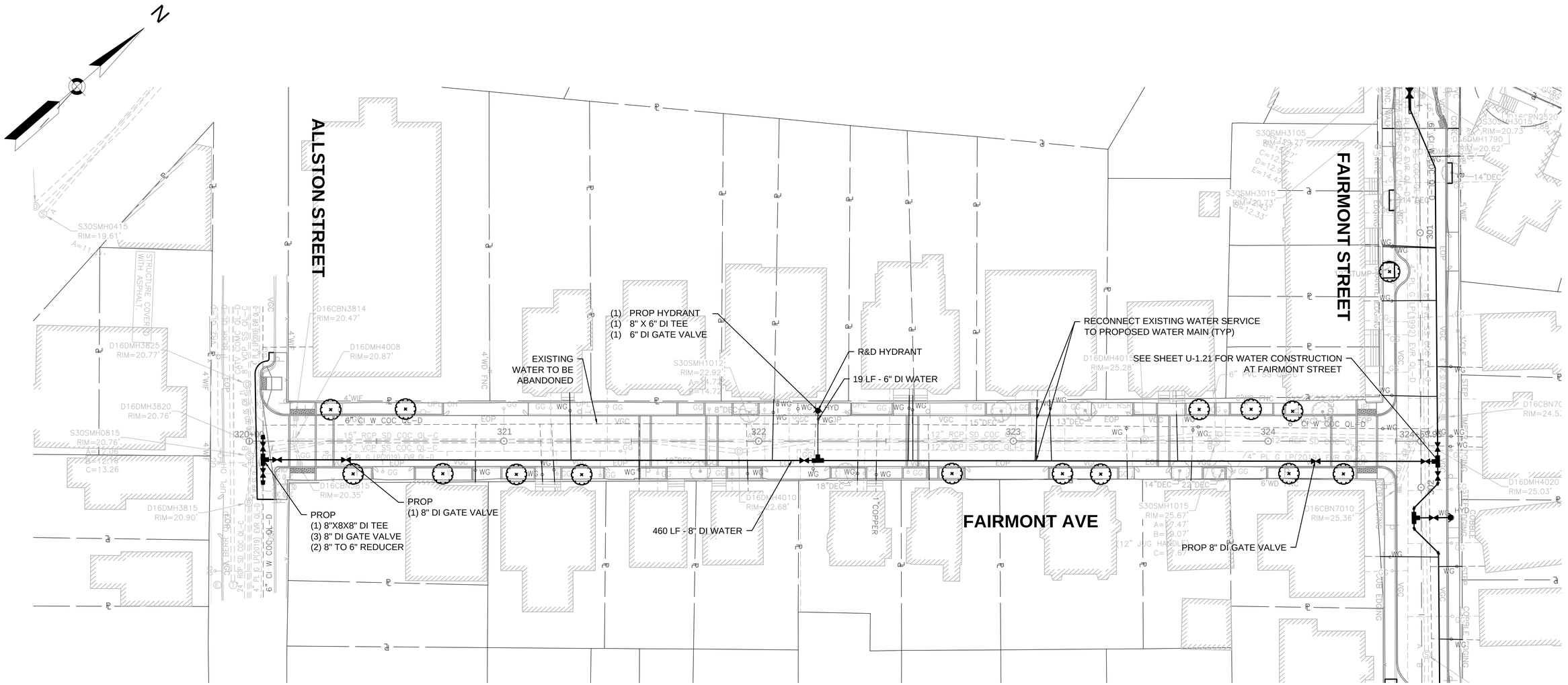

NOTES:

1. ALL WORK SHALL BE IN CONFORMANCE WITH CAMBRIDGE WATER DEPARTMENT STANDARDS.
2. THE CAMBRIDGE WATER DEPARTMENT (CWD) WILL NOT ISSUE NEW WATER CONSTRUCTION PERMITS UNTIL ALL REQUIREMENTS FOR PREVIOUS (I.E., INITIAL CWD PERMIT) CWD PERMITS ARE MET. THESE REQUIREMENTS INCLUDE ACCURATE AND ELGIBLE SWING TIE DIMENSIONS TO ALL NEW WATER MAIN GATE VALVES, TEES AND ELBOWS, REQUIRED CWD "SIGN OFF'S" ON THE CONTRACTOR'S COPY OF THE CWD EXECUTES PERMIT (WHEN PERMITTED WORK IS COMPLETE), TEST DOCUMENTATION THAT INCLUDES MASSACHUSETTS STATE CERTIFIED INITIAL CHLORINATION AND BACTERIA TESTING OF NEW WATER MAIN WORK, AND PRESSURE TEST RESULTS OF NEW WATER MAIN WORK. THE CONTRACTOR IS HEREBY ADVISED, THAT THE CWD WILL NOT BE RESPONSIBLE FOR THE CONTRACTOR'S SLIP IN PROJECT SCHEDULE IF THESE REQUIREMENTS FOR PERMITS ARE NOT FOLLOWED.
3. UNLESS OTHERWISE, NOTED, WATER MAINS SHALL BE INSTALLED WITH MINIMUM 5.0' COVER.
4. CONTRACTOR TO PROVIDE 1" CHLORINATION TAP AT ALL LOCATIONS WHERE PROPOSED WATER MAIN CONNECTS TO EXISTING WATER MAIN.
5. WATER GATES, BOXES, AND HYDRANTS SHALL BE INSTALLED TO EXISTING GRADE AND ADJUSTED TO FINAL GRADE ELEVATIONS DURING SURFACE RESTORATION WORK.
6. ALL ELBOWS, TEES, AND CONNECTIONS TO BE PROPERLY RESTRAINED PER THE CITY OF CAMBRIDGE WATER DEPARTMENT STANDARDS.
7. ALL NEW AND RELOCATED HYDRANTS TO BE FLOW TESTED IN COORDINATION WITH THE CWD AND PAINTED PER THE CWD SPECIFICATIONS. CONTRACTOR TO COORDINATE WITH CWD FOR PAINT SPECIFICATIONS/COLOR.
8. IF LOCATION OF EXISTING CURB STOP IS INACCESSIBLE FOR REPLACEMENT, CONTRACTOR TO COORDINATE WITH CWD TO DETERMINE LOCATION OF NEW CURB STOP PRIOR TO INSTALLATION.
9. FOR WATER SERVICES GREATER THAN 1" IN SIZE, CONTRACTOR TO INSTALL VALVE AT THE MAIN PER DETAILS. WATER SERVICES 1-1/4" IN SIZE SHALL BE REPLACED TO THE BACK OF SIDEWALK WITH 1-1/2" SERVICES. ADDITIONAL LOCATIONS TO BE VERIFIED BY CONTRACTOR IN THE FIELD.
10. ALL WATER SERVICE TO BE VERIFIED BY CONTRACTOR AND CONNECTED TO NEW WATER MAIN. EXISTING LEAD SERVICES IN THE STREET SHALL BE REMOVED AND REPLACED TO THE METER. CONTRACTOR SHALL CONDUCT TWO TEST PITS PER LEAD SERVICE. ONE AT THE CONNECTION AT THE MAIN AND OTHER WITHIN EXISTING SIDEWALK. ALL OTHER NON-COPPER SERVICES AND SERVICES UNDER 1" IN DIAMETER SHALL BE REPLACED TO THE BACK OF SIDEWALK WITH 1" SERVICES. ADDITIONAL LOCATIONS TO BE VERIFIED BY THE CONTRACTOR IN THE FIELD.

PLAN

0 20 50 100

SCALE: 1" = 20'

ISSUED FOR BID

HDR ENGINEERING, INC.
99 HIGH STREET, SUITE 2300
BOSTON, MASSACHUSETTS 02110-2378
(617) 357-7700

COMMONWEALTH OF MASSACHUSETTS
PHILIP FUSCO
CIVIL
No. 45868
REGISTERED PROFESSIONAL ENGINEER

Scale			
Date			
Job No.			
Designed by			
Drawn by			
Checked by	No.	Description	Date
Approved by	REVISIONS		

THE WORKS — CAMBRIDGE DEPARTMENT OF PUBLIC WORKS

Client	CITY OF CAMBRIDGE, MA
Project	RIVER STREET INFRASTRUCTURE AND STREETSCAPE PROJECT
Drawing	**UTILITY COORDINATION PLANS - 20**
Sheet	U-1.20
Total Sheets	381
File No.	

File: C:\PW\WORKING\EAST011D0786396\8412R_UT(UTILITY COORDINATION PLANS).DWG Plotted: 4/19/2022 1:49:36 PM

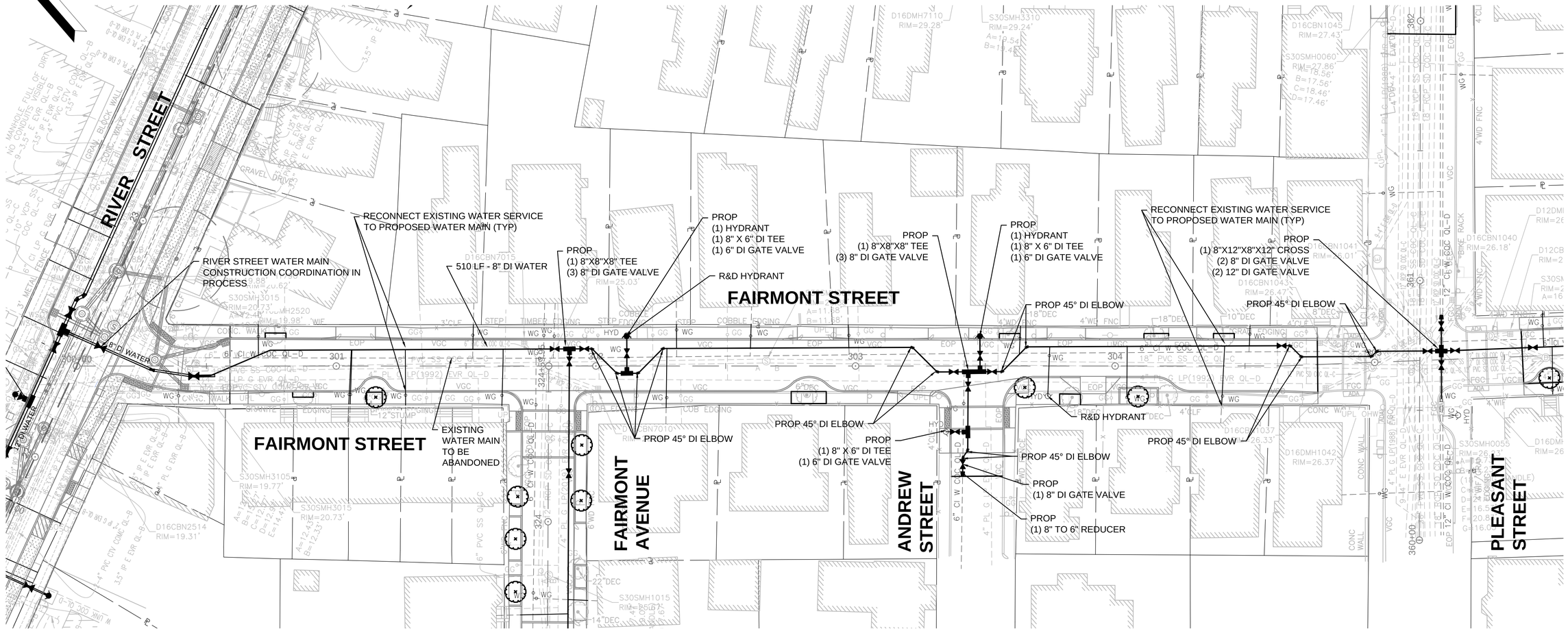

NOTES:

1. ALL WORK SHALL BE IN CONFORMANCE WITH CAMBRIDGE WATER DEPARTMENT STANDARDS.
2. THE CAMBRIDGE WATER DEPARTMENT (CWD) WILL NOT ISSUE NEW WATER CONSTRUCTION PERMITS UNTIL ALL REQUIREMENTS FOR PREVIOUS (I.E., INITIAL CWD PERMIT) CWD PERMITS ARE MET. THESE REQUIREMENTS INCLUDE ACCURATE AND ELGIBLE SWING TIE DIMENSIONS TO ALL NEW WATER MAIN GATE VALVES, TEES AND ELBOWS, REQUIRED CWD "SIGN OFF'S" ON THE CONTRACTOR'S COPY OF THE CWD EXECUTES PERMIT (WHEN PERMITTED WORK IS COMPLETE), TEST DOCUMENTATION THAT INCLUDES MASSACHUSETTS STATE CERTIFIED INITIAL CHLORINATION AND BACTERIA TESTING OF NEW WATER MAIN WORK, AND PRESSURE TEST RESULTS OF NEW WATER MAIN WORK. THE CONTRACTOR IS HEREBY ADVISED, THAT THE CWD WILL NOT BE RESPONSIBLE FOR THE CONTRACTOR'S SLIP IN PROJECT SCHEDULE IF THESE REQUIREMENTS FOR PERMITS ARE NOT FOLLOWED.
3. UNLESS OTHERWISE, NOTED, WATER MAINS SHALL BE INSTALLED WITH MINIMUM 5.0' COVER.
4. CONTRACTOR TO PROVIDE 1" CHLORINATION TAP AT ALL LOCATIONS WHERE PROPOSED WATER MAIN CONNECTS TO EXISTING WATER MAIN.
5. WATER GATES, BOXES, AND HYDRANTS SHALL BE INSTALLED TO EXISTING GRADE AND ADJUSTED TO FINAL GRADE ELEVATIONS DURING SURFACE RESTORATION WORK.
6. ALL ELBOWS, TEES, AND CONNECTIONS TO BE PROPERLY RESTRAINED PER THE CITY OF CAMBRIDGE WATER DEPARTMENT STANDARDS.
7. ALL NEW AND RELOCATED HYDRANTS TO BE FLOW TESTED IN COORDINATION WITH THE CWD AND PAINTED PER THE CWD SPECIFICATIONS. CONTRACTOR TO COORDINATE WITH CWD FOR PAINT SPECIFICATIONS/COLOR.
8. IF LOCATION OF EXISTING CURB STOP IS INACCESSIBLE FOR REPLACEMENT, CONTRACTOR TO COORDINATE WITH CWD TO DETERMINE LOCATION OF NEW CURB STOP PRIOR TO INSTALLATION.
9. FOR WATER SERVICES GREATER THAN 1" IN SIZE, CONTRACTOR TO INSTALL VALVE AT THE MAIN PER DETAILS. WATER SERVICES 1-1/4" IN SIZE SHALL BE REPLACED TO THE BACK OF SIDEWALK WITH 1-1/2" SERVICES. ADDITIONAL LOCATIONS TO BE VERIFIED BY CONTRACTOR IN THE FIELD.
10. ALL WATER SERVICE TO BE VERIFIED BY CONTRACTOR AND CONNECTED TO NEW WATER MAIN. EXISTING LEAD SERVICES IN THE STREET SHALL BE REMOVED AND REPLACED TO THE METER. CONTRACTOR SHALL CONDUCT TWO TEST PITS PER LEAD SERVICE. ONE AT THE CONNECTION AT THE MAIN AND OTHER WITHIN EXISTING SIDEWALK. ALL OTHER NON-COPPER SERVICES AND SERVICES UNDER 1" IN DIAMETER SHALL BE REPLACED TO THE BACK OF SIDEWALK WITH 1" SERVICES. ADDITIONAL LOCATIONS TO BE VERIFIED BY THE CONTRACTOR IN THE FIELD.

PLAN

0 20 50 100

SCALE: 1" = 20'

ISSUED FOR BID

HDR ENGINEERING, INC.
99 HIGH STREET, SUITE 2300
BOSTON, MASSACHUSETTS 02110-2378
(617) 357-7700

COMMONWEALTH OF MASSACHUSETTS
PHILIP FUSCO
CIVIL
No. 45868
REGISTERED PROFESSIONAL ENGINEER

Scale			
Date			
Job No.			
Designed by			
Drawn by			
Checked by	No.	Description	Date
Approved by	REVISIONS		

THE WORKS
CAMBRIDGE DEPARTMENT OF PUBLIC WORKS

Client	CITY OF CAMBRIDGE, MA
Project	RIVER STREET INFRASTRUCTURE AND STREETSCAPE PROJECT
Drawing	**UTILITY COORDINATION PLANS - 21**
Sheet	U-1.21
Total Sheets	381
File No.	

File: C:\PWWORKING\EAST01\D07863961841 2R_UT(UTILITY COORDINATION PLANS).DWG Plotted: 4/19/2022 1:49:47 PM

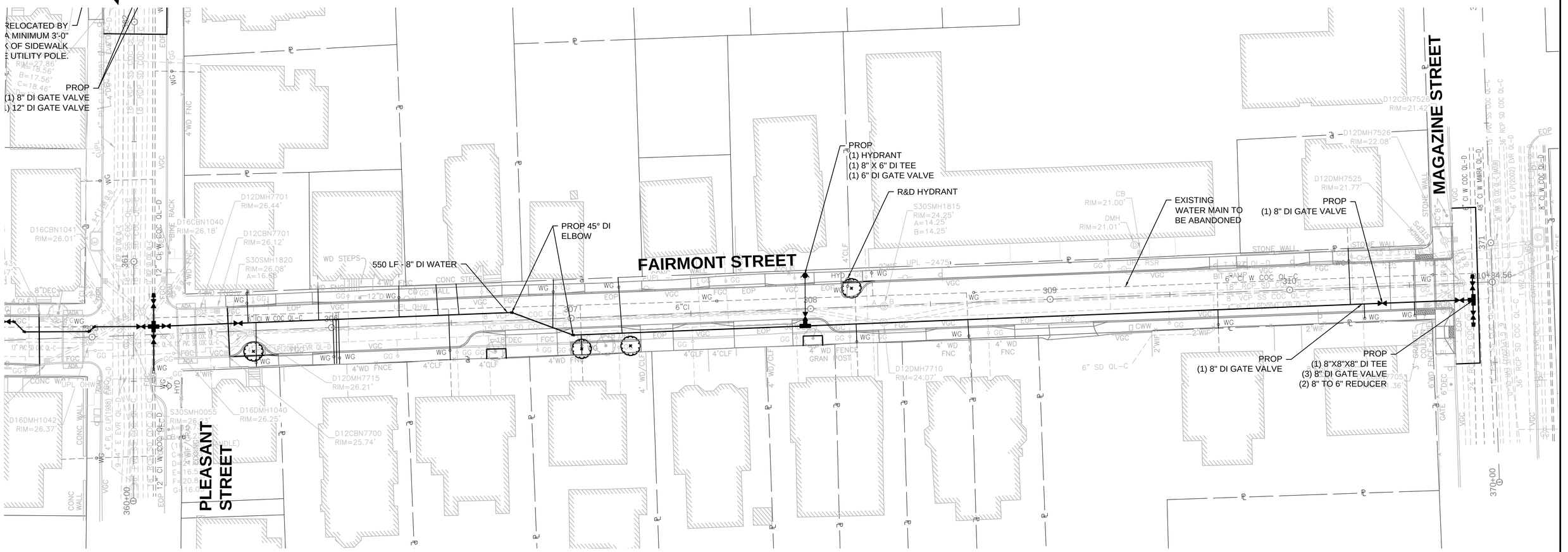

SEE SHEET U-1.21

NOTES:

1. ALL WORK SHALL BE IN CONFORMANCE WITH CAMBRIDGE WATER DEPARTMENT STANDARDS.
2. THE CAMBRIDGE WATER DEPARTMENT (CWD) WILL NOT ISSUE NEW WATER CONSTRUCTION PERMITS UNTIL ALL REQUIREMENTS FOR PREVIOUS (I.E., INITIAL CWD PERMIT) CWD PERMITS ARE MET. THESE REQUIREMENTS INCLUDE ACCURATE AND ELGIBLE SWING TIE DIMENSIONS TO ALL NEW WATER MAIN GATE VALVES, TEES AND ELBOWS, REQUIRED CWD "SIGN OFF'S" ON THE CONTRACTOR'S COPY OF THE CWD EXECUTES PERMIT (WHEN PERMITTED WORK IS COMPLETE), TEST DOCUMENTATION THAT INCLUDES MASSACHUSETTS STATE CERTIFIED INITIAL CHLORINATION AND BACTERIA TESTING OF NEW WATER MAIN WORK, AND PRESSURE TEST RESULTS OF NEW WATER MAIN WORK. THE CONTRACTOR IS HEREBY ADVISED, THAT THE CWD WILL NOT BE RESPONSIBLE FOR THE CONTRACTOR'S SLIP IN PROJECT SCHEDULE IF THESE REQUIREMENTS FOR PERMITS ARE NOT FOLLOWED.
3. UNLESS OTHERWISE, NOTED, WATER MAINS SHALL BE INSTALLED WITH MINIMUM 5.0' COVER.
4. CONTRACTOR TO PROVIDE 1" CHLORINATION TAP AT ALL LOCATIONS WHERE PROPOSED WATER MAIN CONNECTS TO EXISTING WATER MAIN.
5. WATER GATES, BOXES, AND HYDRANTS SHALL BE INSTALLED TO EXISTING GRADE AND ADJUSTED TO FINAL GRADE ELEVATIONS DURING SURFACE RESTORATION WORK.
6. ALL ELBOWS, TEES, AND CONNECTIONS TO BE PROPERLY RESTRAINED PER THE CITY OF CAMBRIDGE WATER DEPARTMENT STANDARDS.
7. ALL NEW AND RELOCATED HYDRANTS TO BE FLOW TESTED IN COORDINATION WITH THE CWD AND PAINTED PER THE CWD SPECIFICATIONS. CONTRACTOR TO COORDINATE WITH CWD FOR PAINT SPECIFICATIONS/COLOR.
8. IF LOCATION OF EXISTING CURB STOP IS INACCESSIBLE FOR REPLACEMENT, CONTRACTOR TO COORDINATE WITH CWD TO DETERMINE LOCATION OF NEW CURB STOP PRIOR TO INSTALLATION.
9. FOR WATER SERVICES GREATER THAN 1" IN SIZE, CONTRACTOR TO INSTALL VALVE AT THE MAIN PER DETAILS. WATER SERVICES 1-1/4" IN SIZE SHALL BE REPLACED TO THE BACK OF SIDEWALK WITH 1-1/2" SERVICES. ADDITIONAL LOCATIONS TO BE VERIFIED BY CONTRACTOR IN THE FIELD.
10. ALL WATER SERVICE TO BE VERIFIED BY CONTRACTOR AND CONNECTED TO NEW WATER MAIN. EXISTING LEAD SERVICES IN THE STREET SHALL BE REMOVED AND REPLACED TO THE METER. CONTRACTOR SHALL CONDUCT TWO TEST PITS PER LEAD SERVICE. ONE AT THE CONNECTION AT THE MAIN AND OTHER WITHIN EXISTING SIDEWALK. ALL OTHER NON-COPPER SERVICES AND SERVICES UNDER 1" IN DIAMETER SHALL BE REPLACED TO THE BACK OF SIDEWALK WITH 1" SERVICES. ADDITIONAL LOCATIONS TO BE VERIFIED BY THE CONTRACTOR IN THE FIELD.

PLAN

0 20 50 100

SCALE: 1" = 20'

ISSUED FOR BID

HDR ENGINEERING, INC.
99 HIGH STREET, SUITE 2300
BOSTON, MASSACHUSETTS 02110-2378
(617) 357-7700

COMMONWEALTH OF MASSACHUSETTS
PHILIP FUSCO
CIVIL
No. 45868
REGISTERED PROFESSIONAL ENGINEER

Scale			
Date			
Job No.			
Designed by			
Drawn by			
Checked by	No.	Description	Date
Approved by	REVISIONS		

THE WORKS — CAMBRIDGE DEPARTMENT OF PUBLIC WORKS

Client: CITY OF CAMBRIDGE, MA	Sheet: U-1.22
Project: RIVER STREET INFRASTRUCTURE AND STREETSCAPE PROJECT	Total Sheets: 381
Drawing: **UTILITY COORDINATION PLANS - 22**	File No.

File: C:\PWWORKING\EAST\01\D07863961\8412R_UT(UTILITY COORDINATION PLANS).DWG Plotted: 4/19/2022 1:49:57 PM

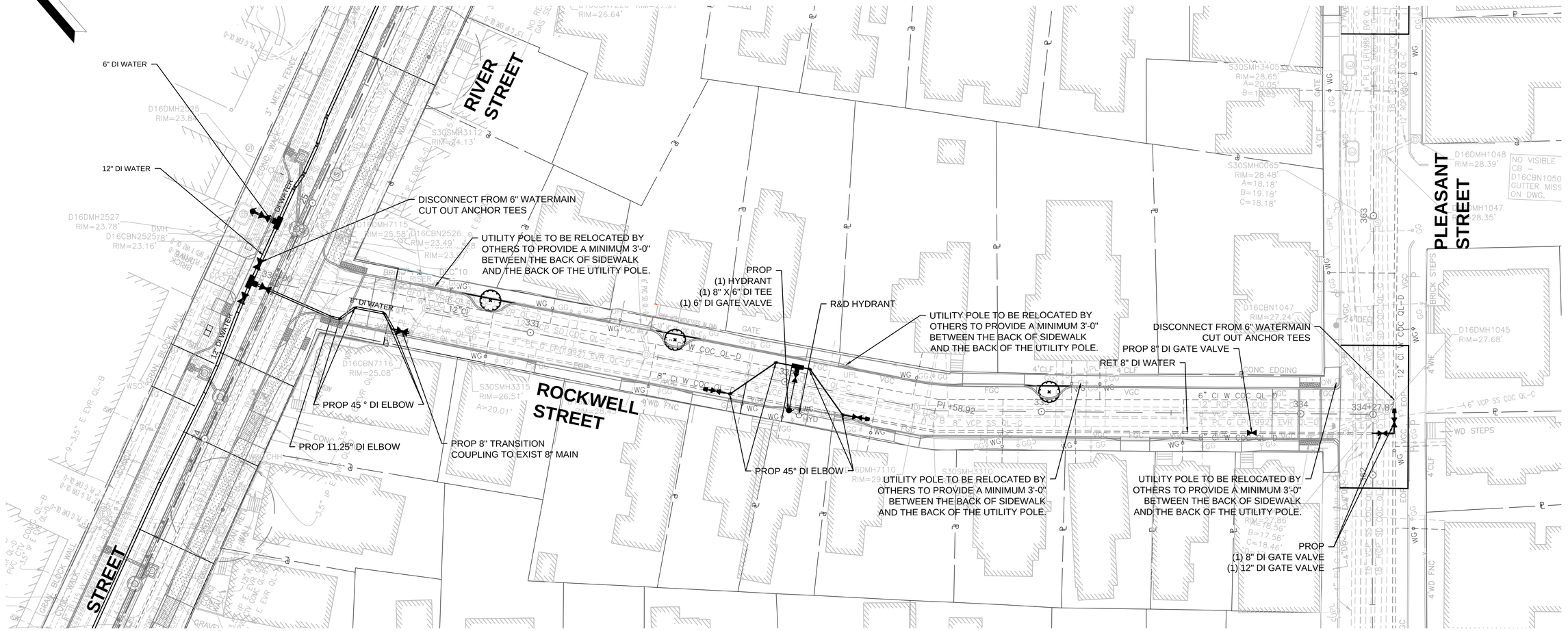

NOTES:

1. ALL WORK SHALL BE IN CONFORMANCE WITH CAMBRIDGE WATER DEPARTMENT STANDARDS.
2. THE CAMBRIDGE WATER DEPARTMENT (CWD) WILL NOT ISSUE NEW WATER CONSTRUCTION PERMITS UNTIL ALL REQUIREMENTS FOR PREVIOUS (I.E., INITIAL CWD PERMIT) CWD PERMITS ARE MET. THESE REQUIREMENTS INCLUDE ACCURATE AND ELGIBLE SWING TIE DIMENSIONS TO ALL NEW WATER MAIN GATE VALVES, TEES AND ELBOWS, REQUIRED CWD "SIGN OFF'S" ON THE CONTRACTOR'S COPY OF THE CWD EXECUTES PERMIT (WHEN PERMITTED WORK IS COMPLETE), TEST DOCUMENTATION THAT INCLUDES MASSACHUSETTS STATE CERTIFIED INITIAL CHLORINATION AND BACTERIA TESTING OF NEW WATER MAIN WORK, AND PRESSURE TEST RESULTS OF NEW WATER MAIN WORK. THE CONTRACTOR IS HEREBY ADVISED, THAT THE CWD WILL NOT BE RESPONSIBLE FOR THE CONTRACTOR'S SLIP IN PROJECT SCHEDULE IF THESE REQUIREMENTS FOR PERMITS ARE NOT FOLLOWED.
3. UNLESS OTHERWISE, NOTED, WATER MAINS SHALL BE INSTALLED WITH MINIMUM 5.0' COVER.
4. CONTRACTOR TO PROVIDE 1" CHLORINATION TAP AT ALL LOCATIONS WHERE PROPOSED WATER MAIN CONNECTS TO EXISTING WATER MAIN.
5. WATER GATES, BOXES, AND HYDRANTS SHALL BE INSTALLED TO EXISTING GRADE AND ADJUSTED TO FINAL GRADE ELEVATIONS DURING SURFACE RESTORATION WORK.
6. ALL ELBOWS, TEES, AND CONNECTIONS TO BE PROPERLY RESTRAINED PER THE CITY OF CAMBRIDGE WATER DEPARTMENT STANDARDS.
7. ALL NEW AND RELOCATED HYDRANTS TO BE FLOW TESTED IN COORDINATION WITH THE CWD AND PAINTED PER THE CWD SPECIFICATIONS. CONTRACTOR TO COORDINATE WITH CWD FOR PAINT SPECIFICATIONS/COLOR.
8. IF LOCATION OF EXISTING CURB STOP IS INACCESSIBLE FOR REPLACEMENT, CONTRACTOR TO COORDINATE WITH CWD TO DETERMINE LOCATION OF NEW CURB STOP PRIOR TO INSTALLATION.
9. FOR WATER SERVICES GREATER THAN 1" IN SIZE, CONTRACTOR TO INSTALL VALVE AT THE MAIN PER DETAILS. WATER SERVICES 1-1/4" IN SIZE SHALL BE REPLACED TO THE BACK OF SIDEWALK WITH 1-1/2" SERVICES. ADDITIONAL LOCATIONS TO BE VERIFIED BY CONTRACTOR IN THE FIELD.
10. ALL WATER SERVICE TO BE VERIFIED BY CONTRACTOR AND CONNECTED TO NEW WATER MAIN. EXISTING LEAD SERVICES IN THE STREET SHALL BE REMOVED AND REPLACED TO THE METER. CONTRACTOR SHALL CONDUCT TWO TEST PITS PER LEAD SERVICE. ONE AT THE CONNECTION AT THE MAIN AND OTHER WITHIN EXISTING SIDEWALK. ALL OTHER NON-COPPER SERVICES AND SERVICES UNDER 1" IN DIAMETER SHALL BE REPLACED TO THE BACK OF SIDEWALK WITH 1" SERVICES. ADDITIONAL LOCATIONS TO BE VERIFIED BY THE CONTRACTOR IN THE FIELD.

PLAN

0 20 50 100

SCALE: 1" = 20'

ISSUED FOR BID

HDR ENGINEERING, INC.
99 HIGH STREET, SUITE 2300
BOSTON, MASSACHUSETTS 02110-2378
(617) 357-7700

COMMONWEALTH OF MASSACHUSETTS
PHILIP FUSCO
CIVIL
No. 45868
REGISTERED PROFESSIONAL ENGINEER

Scale			
Date			
Job No.			
Designed by			
Drawn by			
Checked by	No.	Description	Date
Approved by	REVISIONS		

THE WORKS — CAMBRIDGE DEPARTMENT OF PUBLIC WORKS

Client: CITY OF CAMBRIDGE, MA	Sheet: U-1.23
Project: RIVER STREET INFRASTRUCTURE AND STREETSCAPE PROJECT	Total Sheets: 381
Drawing: **UTILITY COORDINATION PLANS - 23**	File No.

File: C:\PWWORKING\EAST\D0786396\8412R_UT(UTILITY COORDINATION PLANS).DWG Plotted: 4/19/2022 1:50:07 PM

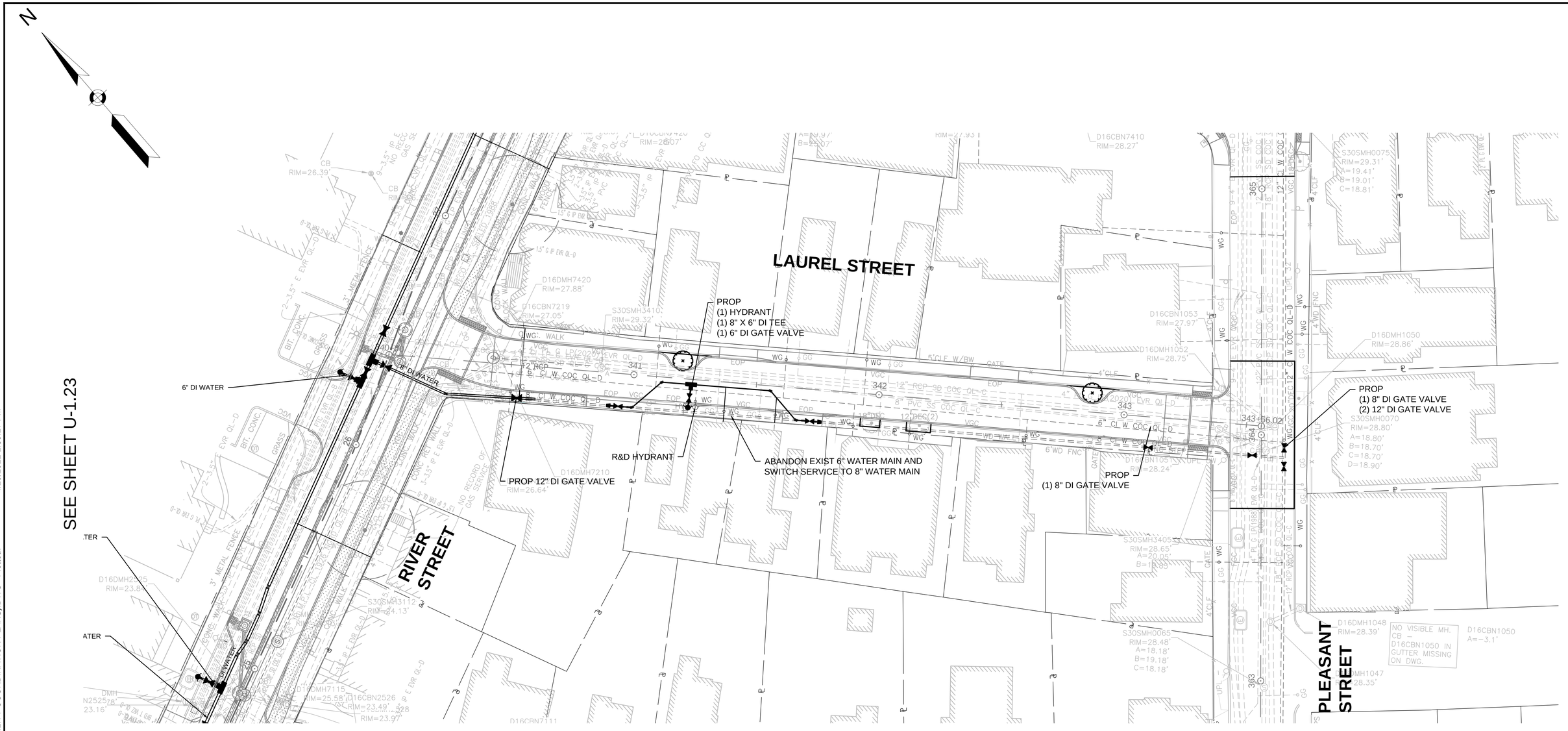

NOTES:

1. ALL WORK SHALL BE IN CONFORMANCE WITH CAMBRIDGE WATER DEPARTMENT STANDARDS.
2. THE CAMBRIDGE WATER DEPARTMENT (CWD) WILL NOT ISSUE NEW WATER CONSTRUCTION PERMITS UNTIL ALL REQUIREMENTS FOR PREVIOUS (I.E., INITIAL CWD PERMIT) CWD PERMITS ARE MET. THESE REQUIREMENTS INCLUDE ACCURATE AND ELGIBLE SWING TIE DIMENSIONS TO ALL NEW WATER MAIN GATE VALVES, TEES AND ELBOWS, REQUIRED CWD "SIGN OFF'S" ON THE CONTRACTOR'S COPY OF THE CWD EXECUTES PERMIT (WHEN PERMITTED WORK IS COMPLETE), TEST DOCUMENTATION THAT INCLUDES MASSACHUSETTS STATE CERTIFIED INITIAL CHLORINATION AND BACTERIA TESTING OF NEW WATER MAIN WORK, AND PRESSURE TEST RESULTS OF NEW WATER MAIN WORK. THE CONTRACTOR IS HEREBY ADVISED, THAT THE CWD WILL NOT BE RESPONSIBLE FOR THE CONTRACTOR'S SLIP IN PROJECT SCHEDULE IF THESE REQUIREMENTS FOR PERMITS ARE NOT FOLLOWED.
3. UNLESS OTHERWISE, NOTED, WATER MAINS SHALL BE INSTALLED WITH MINIMUM 5.0' COVER.
4. CONTRACTOR TO PROVIDE 1" CHLORINATION TAP AT ALL LOCATIONS WHERE PROPOSED WATER MAIN CONNECTS TO EXISTING WATER MAIN.
5. WATER GATES, BOXES, AND HYDRANTS SHALL BE INSTALLED TO EXISTING GRADE AND ADJUSTED TO FINAL GRADE ELEVATIONS DURING SURFACE RESTORATION WORK.
6. ALL ELBOWS, TEES, AND CONNECTIONS TO BE PROPERLY RESTRAINED PER THE CITY OF CAMBRIDGE WATER DEPARTMENT STANDARDS.
7. ALL NEW AND RELOCATED HYDRANTS TO BE FLOW TESTED IN COORDINATION WITH THE CWD AND PAINTED PER THE CWD SPECIFICATIONS. CONTRACTOR TO COORDINATE WITH CWD FOR PAINT SPECIFICATIONS/COLOR.
8. IF LOCATION OF EXISTING CURB STOP IS INACCESSIBLE FOR REPLACEMENT, CONTRACTOR TO COORDINATE WITH CWD TO DETERMINE LOCATION OF NEW CURB STOP PRIOR TO INSTALLATION.
9. FOR WATER SERVICES GREATER THAN 1" IN SIZE, CONTRACTOR TO INSTALL VALVE AT THE MAIN PER DETAILS. WATER SERVICES 1-1/4" IN SIZE SHALL BE REPLACED TO THE BACK OF SIDEWALK WITH 1-1/2" SERVICES. ADDITIONAL LOCATIONS TO BE VERIFIED BY CONTRACTOR IN THE FIELD.
10. ALL WATER SERVICE TO BE VERIFIED BY CONTRACTOR AND CONNECTED TO NEW WATER MAIN. EXISTING LEAD SERVICES IN THE STREET SHALL BE REMOVED AND REPLACED TO THE METER. CONTRACTOR SHALL CONDUCT TWO TEST PITS PER LEAD SERVICE. ONE AT THE CONNECTION AT THE MAIN AND OTHER WITHIN EXISTING SIDEWALK. ALL OTHER NON-COPPER SERVICES AND SERVICES UNDER 1" IN DIAMETER SHALL BE REPLACED TO THE BACK OF SIDEWALK WITH 1" SERVICES. ADDITIONAL LOCATIONS TO BE VERIFIED BY THE CONTRACTOR IN THE FIELD.

PLAN

0 20 50 100

SCALE: 1" = 20'

ISSUED FOR BID

HDR ENGINEERING, INC.
99 HIGH STREET, SUITE 2300
BOSTON, MASSACHUSETTS 02110-2378
(617) 357-7700

COMMONWEALTH OF MASSACHUSETTS
PHILIP FUSCO
CIVIL
No. 45868
REGISTERED PROFESSIONAL ENGINEER

Scale			
Date			
Job No.			
Designed by			
Drawn by			
Checked by	No.	Description	Date
Approved by	REVISIONS		

THE WORKS — CAMBRIDGE DEPARTMENT OF PUBLIC WORKS

Client: CITY OF CAMBRIDGE, MA	Sheet: U-1.24
Project: RIVER STREET INFRASTRUCTURE AND STREETSCAPE PROJECT	Total Sheets: 381
Drawing: **UTILITY COORDINATION PLANS - 24**	File No.

File: C:\PWWORKING\EAST01\D0786396\8412R_UT(UTILITY COORDINATION PLANS).DWG Plotted: 4/19/2022 1:50:17 PM

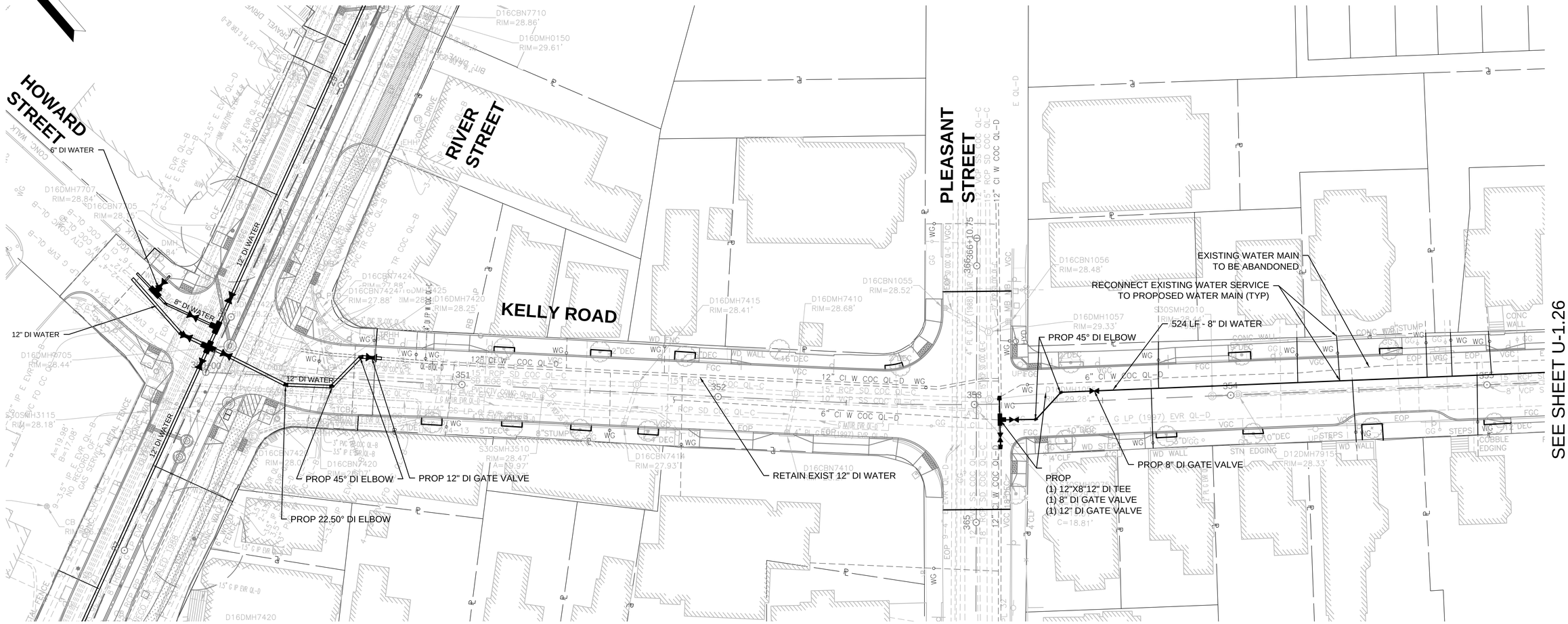

NOTES:

1. ALL WORK SHALL BE IN CONFORMANCE WITH CAMBRIDGE WATER DEPARTMENT STANDARDS.
2. THE CAMBRIDGE WATER DEPARTMENT (CWD) WILL NOT ISSUE NEW WATER CONSTRUCTION PERMITS UNTIL ALL REQUIREMENTS FOR PREVIOUS (I.E., INITIAL CWD PERMIT) CWD PERMITS ARE MET. THESE REQUIREMENTS INCLUDE ACCURATE AND ELGIBLE SWING TIE DIMENSIONS TO ALL NEW WATER MAIN GATE VALVES, TEES AND ELBOWS, REQUIRED CWD "SIGN OFF'S" ON THE CONTRACTOR'S COPY OF THE CWD EXECUTES PERMIT (WHEN PERMITTED WORK IS COMPLETE), TEST DOCUMENTATION THAT INCLUDES MASSACHUSETTS STATE CERTIFIED INITIAL CHLORINATION AND BACTERIA TESTING OF NEW WATER MAIN WORK, AND PRESSURE TEST RESULTS OF NEW WATER MAIN WORK. THE CONTRACTOR IS HEREBY ADVISED, THAT THE CWD WILL NOT BE RESPONSIBLE FOR THE CONTRACTOR'S SLIP IN PROJECT SCHEDULE IF THESE REQUIREMENTS FOR PERMITS ARE NOT FOLLOWED.
3. UNLESS OTHERWISE, NOTED, WATER MAINS SHALL BE INSTALLED WITH MINIMUM 5.0' COVER.
4. CONTRACTOR TO PROVIDE 1" CHLORINATION TAP AT ALL LOCATIONS WHERE PROPOSED WATER MAIN CONNECTS TO EXISTING WATER MAIN.
5. WATER GATES, BOXES, AND HYDRANTS SHALL BE INSTALLED TO EXISTING GRADE AND ADJUSTED TO FINAL GRADE ELEVATIONS DURING SURFACE RESTORATION WORK.
6. ALL ELBOWS, TEES, AND CONNECTIONS TO BE PROPERLY RESTRAINED PER THE CITY OF CAMBRIDGE WATER DEPARTMENT STANDARDS.
7. ALL NEW AND RELOCATED HYDRANTS TO BE FLOW TESTED IN COORDINATION WITH THE CWD AND PAINTED PER THE CWD SPECIFICATIONS. CONTRACTOR TO COORDINATE WITH CWD FOR PAINT SPECIFICATIONS/COLOR.
8. IF LOCATION OF EXISTING CURB STOP IS INACCESSIBLE FOR REPLACEMENT, CONTRACTOR TO COORDINATE WITH CWD TO DETERMINE LOCATION OF NEW CURB STOP PRIOR TO INSTALLATION.
9. FOR WATER SERVICES GREATER THAN 1" IN SIZE, CONTRACTOR TO INSTALL VALVE AT THE MAIN PER DETAILS. WATER SERVICES 1-1/4" IN SIZE SHALL BE REPLACED TO THE BACK OF SIDEWALK WITH 1-1/2" SERVICES. ADDITIONAL LOCATIONS TO BE VERIFIED BY CONTRACTOR IN THE FIELD.
10. ALL WATER SERVICE TO BE VERIFIED BY CONTRACTOR AND CONNECTED TO NEW WATER MAIN. EXISTING LEAD SERVICES IN THE STREET SHALL BE REMOVED AND REPLACED TO THE METER. CONTRACTOR SHALL CONDUCT TWO TEST PITS PER LEAD SERVICE. ONE AT THE CONNECTION AT THE MAIN AND OTHER WITHIN EXISTING SIDEWALK. ALL OTHER NON-COPPER SERVICES AND SERVICES UNDER 1" IN DIAMETER SHALL BE REPLACED TO THE BACK OF SIDEWALK WITH 1" SERVICES. ADDITIONAL LOCATIONS TO BE VERIFIED BY THE CONTRACTOR IN THE FIELD.

PLAN

0 20 50 100

SCALE: 1" = 20'

ISSUED FOR BID

HDR ENGINEERING, INC.
99 HIGH STREET, SUITE 2300
BOSTON, MASSACHUSETTS 02110-2378
(617) 357-7700

COMMONWEALTH OF MASSACHUSETTS
PHILIP FUSCO
CIVIL
No. 45868
REGISTERED PROFESSIONAL ENGINEER

Scale			
Date			
Job No.			
Designed by			
Drawn by			
Checked by	No.	Description	Date
Approved by	REVISIONS		

THE WORKS — CAMBRIDGE DEPARTMENT OF PUBLIC WORKS

Client: CITY OF CAMBRIDGE, MA	Sheet: U-1.25
Project: RIVER STREET INFRASTRUCTURE AND STREETSCAPE PROJECT	Total Sheets: 381
Drawing: **UTILITY COORDINATION PLANS - 25**	File No.

4/19/2022 1:50:27 PM

File: C:\PWORKING\EAST01\D07863961841 2R_UT(UTILITY COORDINATION PLANS).DWG Plotted:

File: C:\PW\WORKING\EAST011D0786396\8412R_UT(UTILITY COORDINATION PLANS).DWG Plotted: 4/19/2022 1:50:37 PM

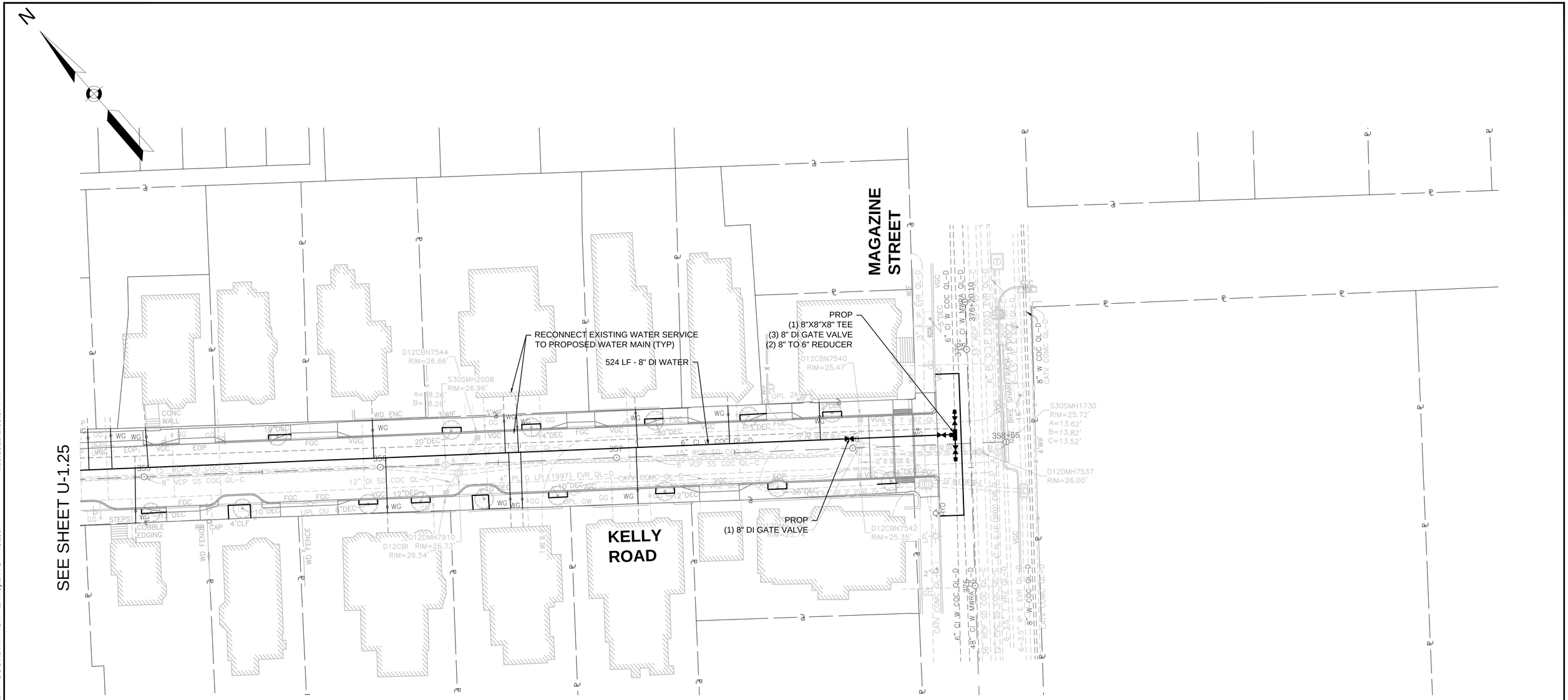

NOTES:

1. ALL WORK SHALL BE IN CONFORMANCE WITH CAMBRIDGE WATER DEPARTMENT STANDARDS.
2. THE CAMBRIDGE WATER DEPARTMENT (CWD) WILL NOT ISSUE NEW WATER CONSTRUCTION PERMITS UNTIL ALL REQUIREMENTS FOR PREVIOUS (I.E., INITIAL CWD PERMIT) CWD PERMITS ARE MET. THESE REQUIREMENTS INCLUDE ACCURATE AND ELGIBLE SWING TIE DIMENSIONS TO ALL NEW WATER MAIN GATE VALVES, TEES AND ELBOWS, REQUIRED CWD "SIGN OFF'S" ON THE CONTRACTOR'S COPY OF THE CWD EXECUTES PERMIT (WHEN PERMITTED WORK IS COMPLETE), TEST DOCUMENTATION THAT INCLUDES MASSACHUSETTS STATE CERTIFIED INITIAL CHLORINATION AND BACTERIA TESTING OF NEW WATER MAIN WORK, AND PRESSURE TEST RESULTS OF NEW WATER MAIN WORK. THE CONTRACTOR IS HEREBY ADVISED, THAT THE CWD WILL NOT BE RESPONSIBLE FOR THE CONTRACTOR'S SLIP IN PROJECT SCHEDULE IF THESE REQUIREMENTS FOR PERMITS ARE NOT FOLLOWED.
3. UNLESS OTHERWISE, NOTED, WATER MAINS SHALL BE INSTALLED WITH MINIMUM 5.0' COVER.
4. CONTRACTOR TO PROVIDE 1" CHLORINATION TAP AT ALL LOCATIONS WHERE PROPOSED WATER MAIN CONNECTS TO EXISTING WATER MAIN.
5. WATER GATES, BOXES, AND HYDRANTS SHALL BE INSTALLED TO EXISTING GRADE AND ADJUSTED TO FINAL GRADE ELEVATIONS DURING SURFACE RESTORATION WORK.
6. ALL ELBOWS, TEES, AND CONNECTIONS TO BE PROPERLY RESTRAINED PER THE CITY OF CAMBRIDGE WATER DEPARTMENT STANDARDS.
7. ALL NEW AND RELOCATED HYDRANTS TO BE FLOW TESTED IN COORDINATION WITH THE CWD AND PAINTED PER THE CWD SPECIFICATIONS. CONTRACTOR TO COORDINATE WITH CWD FOR PAINT SPECIFICATIONS/COLOR.
8. IF LOCATION OF EXISTING CURB STOP IS INACCESSIBLE FOR REPLACEMENT, CONTRACTOR TO COORDINATE WITH CWD TO DETERMINE LOCATION OF NEW CURB STOP PRIOR TO INSTALLATION.
9. FOR WATER SERVICES GREATER THAN 1" IN SIZE, CONTRACTOR TO INSTALL VALVE AT THE MAIN PER DETAILS. WATER SERVICES 1-1/4" IN SIZE SHALL BE REPLACED TO THE BACK OF SIDEWALK WITH 1-1/2" SERVICES. ADDITIONAL LOCATIONS TO BE VERIFIED BY CONTRACTOR IN THE FIELD.
10. ALL WATER SERVICE TO BE VERIFIED BY CONTRACTOR AND CONNECTED TO NEW WATER MAIN. EXISTING LEAD SERVICES IN THE STREET SHALL BE REMOVED AND REPLACED TO THE METER. CONTRACTOR SHALL CONDUCT TWO TEST PITS PER LEAD SERVICE. ONE AT THE CONNECTION AT THE MAIN AND OTHER WITHIN EXISTING SIDEWALK. ALL OTHER NON-COPPER SERVICES AND SERVICES UNDER 1" IN DIAMETER SHALL BE REPLACED TO THE BACK OF SIDEWALK WITH 1" SERVICES. ADDITIONAL LOCATIONS TO BE VERIFIED BY THE CONTRACTOR IN THE FIELD.

PLAN

0 20 50 100

SCALE: 1" = 20'

ISSUED FOR BID

HDR ENGINEERING, INC.
99 HIGH STREET, SUITE 2300
BOSTON, MASSACHUSETTS 02110-2378
(617) 357-7700

COMMONWEALTH OF MASSACHUSETTS PHILIP FUSCO CIVIL No. 45868 REGISTERED PROFESSIONAL ENGINEER

Scale			
Date			
Job No.			
Designed by			
Drawn by			
Checked by	No.	Description	Date
Approved by	REVISIONS		

THE WORKS — CAMBRIDGE DEPARTMENT OF PUBLIC

Client	CITY OF CAMBRIDGE, MA	Sheet	U-1.26
Project	RIVER STREET INFRASTRUCTURE AND STREETSCAPE PROJECT	Total Sheets	381
Drawing	**UTILITY COORDINATION PLANS - 26**	File No.	

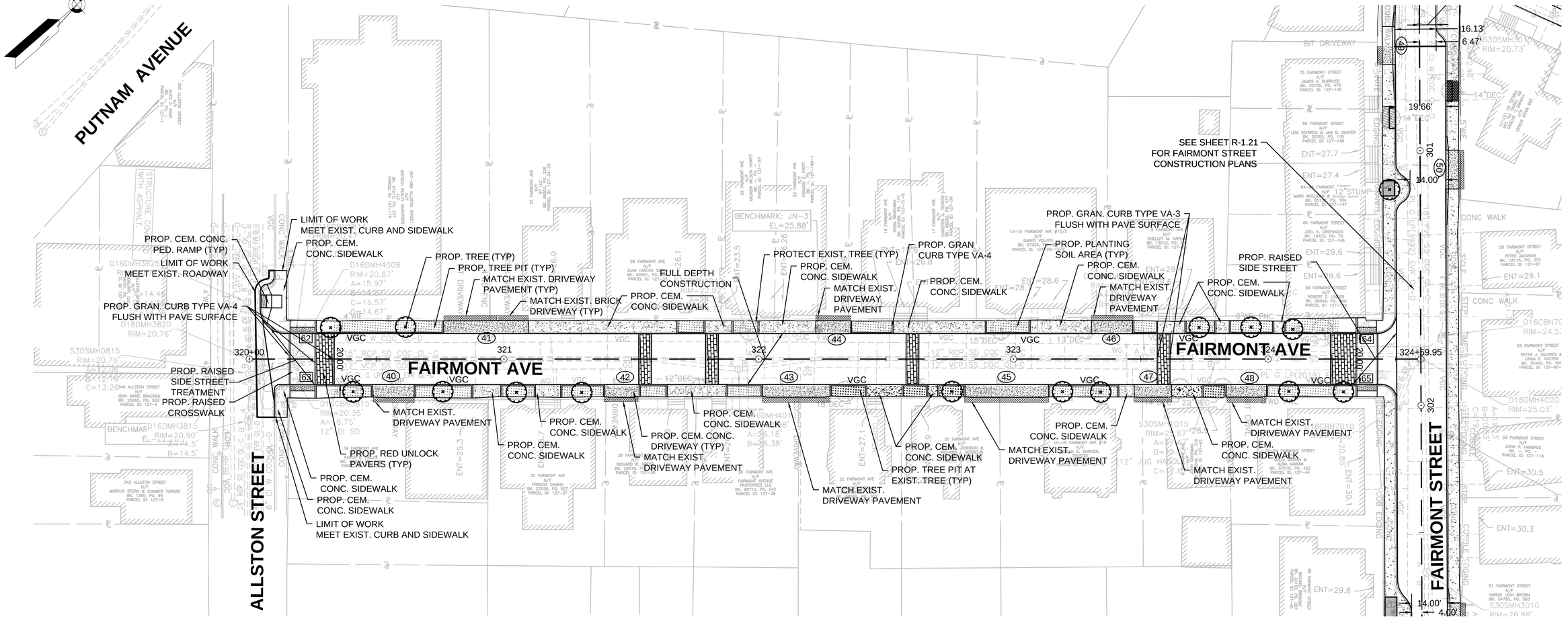
N
PUTNAM AVENUE
ALLSTON STREET
FAIRMONT AVE
FAIRMONT STREET
BENCHMARK: JN-3
EL=25.88'
LIMIT OF WORK
MEET EXIST. CURB AND SIDEWALK
PROP. CEM. CONC.
PED. RAMP (TYP)
PROP. CEM.
CONC. SIDEWALK
LIMIT OF WORK
MEET EXIST. ROADWAY
PROP. GRAN. CURB TYPE VA-4
FLUSH WITH PAVE SURFACE
PROP. RAISED
SIDE STREET
TREATMENT
PROP. RAISED
CROSSWALK
PROP. TREE (TYP)
PROP. TREE PIT (TYP)
MATCH EXIST. DRIVEWAY
PAVEMENT (TYP)
MATCH EXIST. BRICK
DRIVEWAY (TYP)
FULL DEPTH
CONSTRUCTION
PROTECT EXIST. TREE (TYP)
PROP. GRAN
CURB TYPE VA-4
PROP. CEM.
CONC. SIDEWALK
MATCH EXIST.
DRIVEWAY
PAVEMENT
PROP. GRAN. CURB TYPE VA-3
FLUSH WITH PAVE SURFACE
PROP. PLANTING
SOIL AREA (TYP)
PROP. CEM.
CONC. SIDEWALK
MATCH EXIST.
DRIVEWAY
PAVEMENT
PROP. RAISED
SIDE STREET
PROP. CEM.
CONC. SIDEWALK
SEE SHEET R-1.21
FOR FAIRMONT STREET
CONSTRUCTION PLANS
MATCH EXIST.
DRIVEWAY PAVEMENT
PROP. CEM.
CONC. SIDEWALK
PROP. RED UNLOCK
PAVERS (TYP)
PROP. CEM.
CONC. SIDEWALK
LIMIT OF WORK
MEET EXIST. CURB AND SIDEWALK
PROP. CEM.
CONC. SIDEWALK
PROP. CEM. CONC.
DRIVEWAY (TYP)
MATCH EXIST.
DRIVEWAY PAVEMENT
PROP. CEM.
CONC. SIDEWALK
PROP. TREE PIT AT
EXIST. TREE (TYP)
MATCH EXIST.
DRIVEWAY PAVEMENT
PROP. CEM.
CONC. SIDEWALK
MATCH EXIST.
DRIVEWAY PAVEMENT
PROP. CEM.
CONC. SIDEWALK
MATCH EXIST.
DRIVEWAY PAVEMENT
320+00
321
322
323
324+59.95
62
63
40
41
42
43
44
45
46
47
48
64
65
VGC
20.00'
16.13'
6.47'
19.66'
14.00'
14.00'
4.00'
301
302
BIT DRIVEWAY
CONC WALK
STRUCTURE COVERED
WITH ASPHALT
72 FAIRMONT STREET
N/F
JAMES A. BURROUGS
BK. 20720, PG. 475
PARCEL ID: 127-146
68 FAIRMONT STREET
N/F
LISA SCHMESO & JAN B. SHAFER
BK. 25353, PG. 118
PARCEL ID: 127-146
64-66 FAIRMONT STREET
N/F
MARK MULLIGAN & Amanda Young
BK. 65?, PG. 184
PARCEL ID: 127-147
60 FAIRMONT STREET
N/F
JOEL K. GREENGER
BK. 18472, PG. 73
PARCEL ID: 127-148
59 FAIRMONT STREET
N/F
PETER JACKSON
BK. 18116, PG. 373
PARCEL ID: 127-91
56 FAIRMONT STREET
N/F
ROBERT E. LANE
BK. 28849, PG. 155
PARCEL ID: 127-90
55 FAIRMONT STREET
N/F
PETER J. SQUIRES &
LINDA E. KASTEN
BK. 30492, PG. 49C
PARCEL ID: 127-90-
53 FAIRMONT STREET
N/F
JOHN R. HARBAGE
BK. -, PG. -
PARCEL ID: 127-116
51 FAIRMONT STREET
N/F
HARON LEAH BROWN
BK. 54790, PG. 533
S30SMH3010
RIM=26.82'
342 ALLSTON STREET
N/F
MARCUS STERN & SUMMER TURNER
BK. 1360, PG. 66
PARCEL ID: 127-5
346 ALLSTON STREET
N/F
JEAN MARIE BRACKEN
BK. 35865, PG. 553
PARCEL ID: 127-4
34 FAIRMONT AVE
N/F
RICHARD W. [illegible]
BK. 29018, PG. 328
PARCEL ID: 127-38
32 FAIRMONT AVE
N/F
FRANCIS CANINA
BK. 37939, PG. 507
PARCEL ID: 127-37
29 FAIRMONT AVE
N/F
JUAN CARLOS SEGURA
BK. 49991, PG. 1
PARCEL ID: 127-
25 FAIRMONT AVE
N/F
ANDREW MACKEN HORTET
BK. 32?, PG. 147
PARCEL ID: 127-147
23 FAIRMONT AVE
N/F
FRANCES E. PATTI
BK. 8?, PG. 184-1
PARCEL ID: 127-184-1
19 FAIRMONT AVE
N/F
MISSA WILLIAMS
BK. 8?, PG. 179
PARCEL ID: 127-179
17 FAIRMONT AVE
N/F
CHRISTOPHER [illegible]
BK. 8?, PG. 177
PARCEL ID: 127-178
13-15 FAIRMONT AVE #13/2
N/F
DARKO VISKOV
BK. 37?, PG. ?
PARCEL ID: 127-?
SHELLEY M. KARP
BK. 13013, PG. ?
PARCEL ID: 127-?
20 FAIRMONT AVE
N/F
[illegible] JOHNSON &
[illegible] GOSSELIN
BK. 8?, PG. ?
PARCEL ID: 127-?
22 FAIRMONT AVE
N/F
FAIRMONT AVENUE
PROPERTIES LLC
BK. 66?12, PG. 242
PARCEL ID: 127-39
14 FAIRMONT AVE #14
N/F
[illegible] O. SHRIVER,
[illegible]
PARCEL ID: 127-?
D16DMH3825
RIM=20.87'
D16DMH4008
RIM=20.87'
A=15.97'
D16DMH3820
RIM=20.76'
S30SMH0815
RIM=20.76'
D16DMH3815
RIM=20.90'
A=14.5'
B=14.5'
D16DMH4020
RIM=25.03'
S30SMH3015
RIM=20.67'
D16CBN7010
D16CBN7C
RIM=24.5
S30SMH3010
RIM=26.82'
ENT=27.7
ENT=27.4
ENT=29.6
ENT=29.1
ENT=30.5
ENT=30.3
ENT=29.8
ENT=30.1
ENT=27.1
ENT=25.3
ENT=23.5
ENT=26.8
ENT=28.6
ENT=26.1
ENT=26.0
ENT=26.26
12" RCP SD COC
15"DEC
12"DEC
14"DEC
12" JUG HANDLE
12" STUMP
6"WD FNC
6"WD FNC
6"CHAIN LINK FNC
6"CHAIN LINK FNC
6"WD FNC
6"WD FNC
6"WD

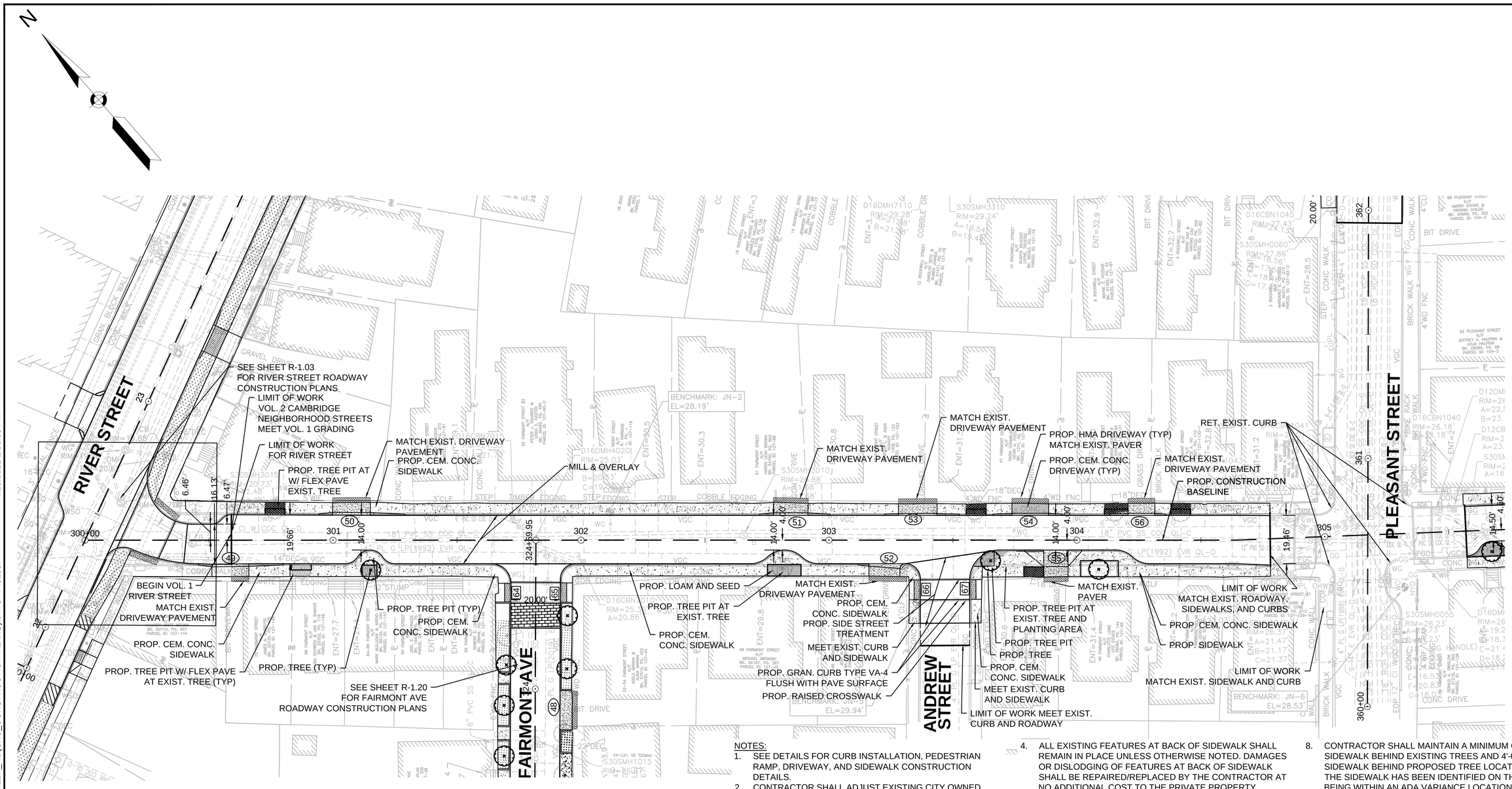

LEGEND:

- PROPOSED CEMENT CONCRETE SIDEWALK
- PROPOSED WIRECUT BRICK SIDEWALK
- PROPOSED FLEXIPAVE WALK
- PROPOSED PLANTING SOIL AREA
- PROPOSED CEMENT CONCRETE DRIVEWAY
- PROPOSED BRICK DRIVEWAY
- PROPOSED HMA DRIVEWAY
- PROPOSED COBBLESTONE OR FIELDSTONE DRIVEWAY
- PROPOSED GRAVEL DRIVEWAY
- MACTH EXIST. DRIVEWAY PAVEMENT
- PROPOSED TREE
- EXIST. TREE

NOTES:

1. SEE DETAILS FOR CURB INSTALLATION, PEDESTRIAN RAMP, DRIVEWAY, AND SIDEWALK CONSTRUCTION DETAILS.
2. CONTRACTOR SHALL ADJUST EXISTING CITY OWNED UTILITY COVERS AND CASTINGS TO RE-GRADED SURFACES. THE CONTRACTOR TO COORDINATE WITH RESPECTIVE UTILITIES COMPANIES FOR GAS/TELECOM/CABLE/ELECTRIC.
3. ALL VERTICAL GRANITE CURBING MEETING THE SPECIFICATIONS AND WITH APPROVAL OF THE OWNER SHALL BE REMOVED AND RESET UNLESS OTHERWISE NOTED.
4. ALL EXISTING FEATURES AT BACK OF SIDEWALK SHALL REMAIN IN PLACE UNLESS OTHERWISE NOTED. DAMAGES OR DISLODGING OF FEATURES AT BACK OF SIDEWALK SHALL BE REPAIRED/REPLACED BY THE CONTRACTOR AT NO ADDITIONAL COST TO THE PRIVATE PROPERTY OWNER OR OWNERS.
5. CONTRACTOR SHALL MATCH THE EXISTING GRADE AT THE LIMIT OF PROPOSED COLD PLANE AND OVERLAY. THE JOINT BETWEEN EXISTING AND PROPOSED PAVEMENT SHALL BE TREATED WITH INFRARED PAVEMENT SEALANT AND HOT POURED RUBBERIZED ASPHALT SEALER.
6. CONTRACTOR SHALL REMOVE ALL EXISTING SIGNS FROM UTILITY POLES. REFER TO SHEETS TR-1.20 TO TR-1.27 FOR PROPOSED SIGNS AND THEIR LOCATIONS.
7. CONTRACTOR SHALL NOT PERFORM ANY WORK ON PRIVATE PROPERTY UNTIL A SIGNED RIGHT-OF-ENTRY (ROE) IS RECEIVED BY DPW FROM THE PROPERTY OWNER. THE CONTRACTOR IS RESPONSIBLE FOR COORDINATING WITH THE PROPERTY OWNER.
8. CONTRACTOR SHALL MAINTAIN A MINIMUM OF 3'-0" WIDE SIDEWALK BEHIND EXISTING TREES AND 4'-0" WIDE SIDEWALK BEHIND PROPOSED TREE LOCATIONS UNLESS THE SIDEWALK HAS BEEN IDENTIFIED ON THE PLANS AS BEING WITHIN AN ADA VARIANCE LOCATION.
9. WHERE SIDEWALKS ARE LESS THAN 5' WIDE, PASSING ZONES HAVE BEEN IDENTIFIED EVERY 200' WITHIN ACCESSIBLE ROUTES. PASSING ZONES SHALL BE A MINIMUM SIZE OF 5'X5' AND HAVE A MAXIMUM SLOPE OF 1.5% IN ALL DIRECTIONS. ADA ACCESSIBLE ROUTES ARE NOTED ON THE DRAWINGS.
10. LOCATIONS WHERE CONCRETE OR BRICK SIDEWALKS ARE UNABLE TO BE INSTALLED DUE TO THE PRESENCE OF ROOTS AT EXISTING TREES, APPROXIMATE LIMITS OF FLEXI-PAVE ARE INDICATED ON THE DRAWINGS. LIMITS OF FLEXI-PAVE SHALL BE FINALIZED IN THE FIELD UPON THE REMOVAL OF THE EXISTING SIDEWALK AND REVIEW OF ROOT LOCATIONS. FOR FLEXIBLE POROUS PAVING, REFER TO SPECIFICATION.

PLAN

0 20 50 100

SCALE: 1" = 20'

ISSUED FOR BID

HDR ENGINEERING, INC.
99 HIGH STREET, SUITE 2300
BOSTON, MASSACHUSETTS 02110–2378
(617) 357–7700

COMMONWEALTH OF MASSACHUSETTS
PHILIP FUSCO
CIVIL
No. 45868
REGISTERED PROFESSIONAL ENGINEER

Scale			
Date			
Job No.			
Designed by			
Drawn by			
Checked by	No.	Description	Date
Approved by	REVISIONS		

THE WORKS — CAMBRIDGE DEPARTMENT OF PUBLIC WORKS

Client: CITY OF CAMBRIDGE, MA	Sheet: R-1.21
Project: RIVER STREET INFRASTRUCTURE AND STREETSCAPE PROJECT	Total Sheets: 381
Drawing: **ROADWAY CONSTRUCTION PLAN - 21**	File No.

File: C:\PWWORKING\EAST01\D0786396\R412R_HD\CNS_CONSTRUCTION PLANS).DWG Plotted: 4/19/2022 1:51:09 PM

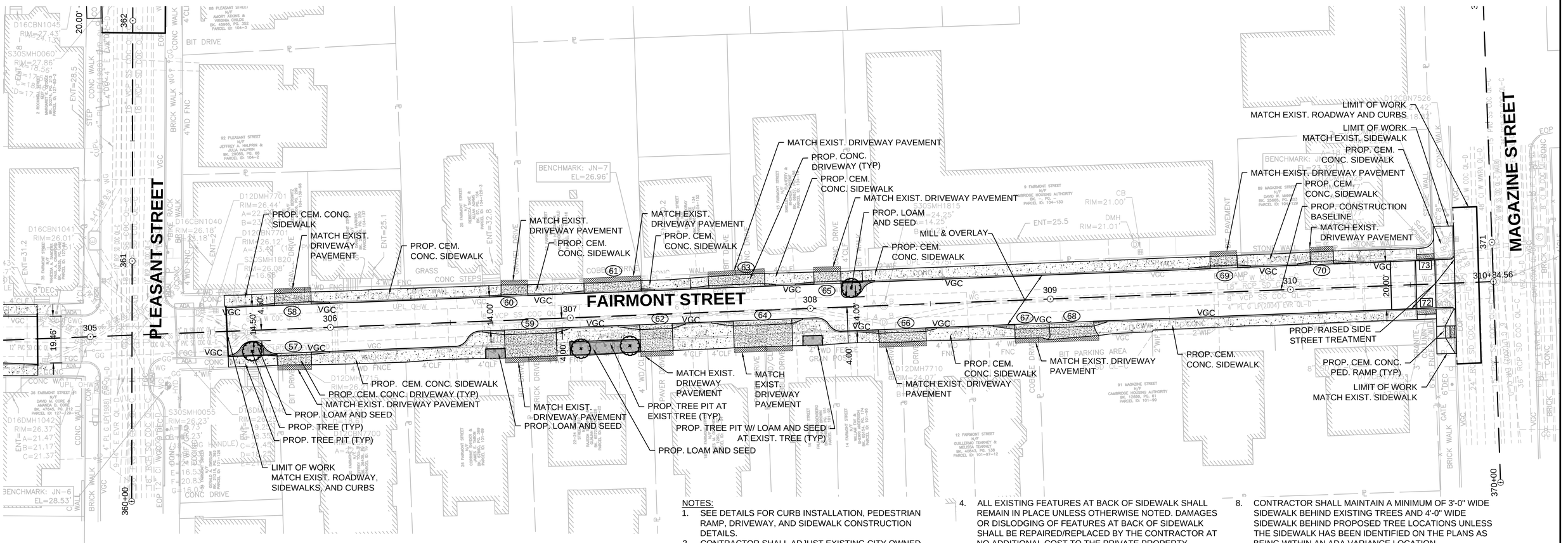

LEGEND:

- PROPOSED CEMENT CONCRETE SIDEWALK
- PROPOSED WIRECUT BRICK SIDEWALK
- PROPOSED FLEXIPAVE WALK
- PROPOSED PLANTING SOIL AREA
- PROPOSED CEMENT CONCRETE DRIVEWAY
- PROPOSED BRICK DRIVEWAY
- PROPOSED HMA DRIVEWAY
- PROPOSED COBBLESTONE OR FIELDSTONE DRIVEWAY
- PROPOSED GRAVEL DRIVEWAY
- MACTH EXIST. DRIVEWAY PAVEMENT
- PROPOSED TREE
- EXIST. TREE

NOTES:

1. SEE DETAILS FOR CURB INSTALLATION, PEDESTRIAN RAMP, DRIVEWAY, AND SIDEWALK CONSTRUCTION DETAILS.
2. CONTRACTOR SHALL ADJUST EXISTING CITY OWNED UTILITY COVERS AND CASTINGS TO RE-GRADED SURFACES. THE CONTRACTOR TO COORDINATE WITH RESPECTIVE UTILITIES COMPANIES FOR GAS/TELECOM/CABLE/ELECTRIC.
3. ALL VERTICAL GRANITE CURBING MEETING THE SPECIFICATIONS AND WITH APPROVAL OF THE OWNER SHALL BE REMOVED AND RESET UNLESS OTHERWISE NOTED.
4. ALL EXISTING FEATURES AT BACK OF SIDEWALK SHALL REMAIN IN PLACE UNLESS OTHERWISE NOTED. DAMAGES OR DISLODGING OF FEATURES AT BACK OF SIDEWALK SHALL BE REPAIRED/REPLACED BY THE CONTRACTOR AT NO ADDITIONAL COST TO THE PRIVATE PROPERTY OWNER OR OWNERS.
5. CONTRACTOR SHALL MATCH THE EXISTING GRADE AT THE LIMIT OF PROPOSED COLD PLANE AND OVERLAY. THE JOINT BETWEEN EXISTING AND PROPOSED PAVEMENT SHALL BE TREATED WITH INFRARED PAVEMENT SEALANT AND HOT POURED RUBBERIZED ASPHALT SEALER.
6. CONTRACTOR SHALL REMOVE ALL EXISTING SIGNS FROM UTILITY POLES. REFER TO SHEETS TR-1.20 TO TR-1.27 FOR PROPOSED SIGNS AND THEIR LOCATIONS.
7. CONTRACTOR SHALL NOT PERFORM ANY WORK ON PRIVATE PROPERTY UNTIL A SIGNED RIGHT-OF-ENTRY (ROE) IS RECEIVED BY DPW FROM THE PROPERTY OWNER. THE CONTRACTOR IS RESPONSIBLE FOR COORDINATING WITH THE PROPERTY OWNER.
8. CONTRACTOR SHALL MAINTAIN A MINIMUM OF 3'-0" WIDE SIDEWALK BEHIND EXISTING TREES AND 4'-0" WIDE SIDEWALK BEHIND PROPOSED TREE LOCATIONS UNLESS THE SIDEWALK HAS BEEN IDENTIFIED ON THE PLANS AS BEING WITHIN AN ADA VARIANCE LOCATION.
9. WHERE SIDEWALKS ARE LESS THAN 5' WIDE, PASSING ZONES HAVE BEEN IDENTIFIED EVERY 200' WITHIN ACCESSIBLE ROUTES. PASSING ZONES SHALL BE A MINIMUM SIZE OF 5'X5' AND HAVE A MAXIMUM SLOPE OF 1.5% IN ALL DIRECTIONS. ADA ACCESSIBLE ROUTES ARE NOTED ON THE DRAWINGS.
10. LOCATIONS WHERE CONCRETE OR BRICK SIDEWALKS ARE UNABLE TO BE INSTALLED DUE TO THE PRESENCE OF ROOTS AT EXISTING TREES, APPROXIMATE LIMITS OF FLEXI-PAVE ARE INDICATED ON THE DRAWINGS. LIMITS OF FLEXI-PAVE SHALL BE FINALIZED IN THE FIELD UPON THE REMOVAL OF THE EXISTING SIDEWALK AND REVIEW OF ROOT LOCATIONS. FOR FLEXIBLE POROUS PAVING, REFER TO SPECIFICATION.

PLAN

0 20 50 100

SCALE: 1" = 20'

ISSUED FOR BID

HDR ENGINEERING, INC.
99 HIGH STREET, SUITE 2300
BOSTON, MASSACHUSETTS 02110-2378
(617) 357-7700

COMMONWEALTH OF MASSACHUSETTS
PHILIP FUSCO
CIVIL
No. 45868
REGISTERED PROFESSIONAL ENGINEER

Scale			
Date			
Job No.			
Designed by			
Drawn by			
Checked by	No.	Description	Date
Approved by	REVISIONS		

THE WORKS — CAMBRIDGE DEPARTMENT OF PUBLIC WORKS

Client: CITY OF CAMBRIDGE, MA	Sheet: R-1.22
Project: RIVER STREET INFRASTRUCTURE AND STREETSCAPE PROJECT	Total Sheets: 381
Drawing: **ROADWAY CONSTRUCTION PLAN - 22**	File No.

File: C:\PW\WORKING\EAST01\D0786396\8412R_HD\CNS_CONSTRUCTION PLANS).DWG Plotted: 4/19/2022 1:51:18 PM

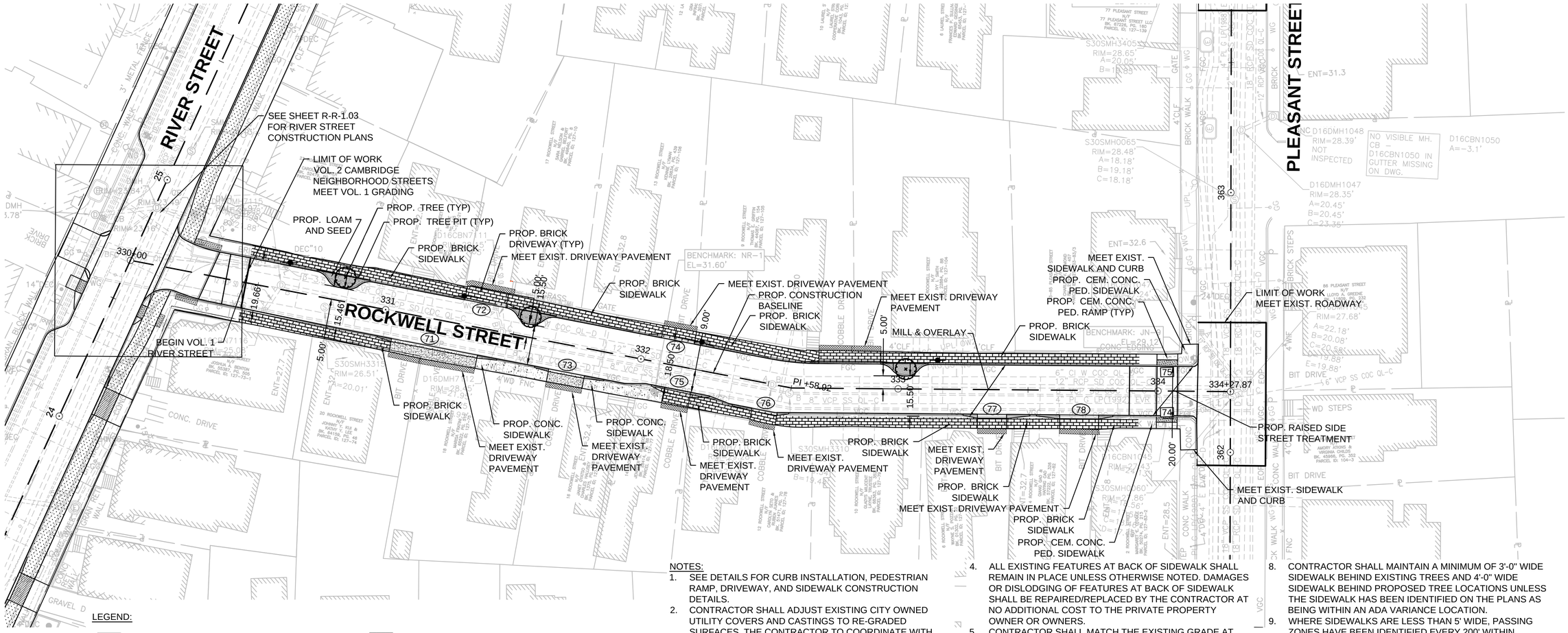

NOTES:

1. SEE DETAILS FOR CURB INSTALLATION, PEDESTRIAN RAMP, DRIVEWAY, AND SIDEWALK CONSTRUCTION DETAILS.
2. CONTRACTOR SHALL ADJUST EXISTING CITY OWNED UTILITY COVERS AND CASTINGS TO RE-GRADED SURFACES. THE CONTRACTOR TO COORDINATE WITH RESPECTIVE UTILITIES COMPANIES FOR GAS/TELECOM/CABLE/ELECTRIC.
3. ALL VERTICAL GRANITE CURBING MEETING THE SPECIFICATIONS AND WITH APPROVAL OF THE OWNER SHALL BE REMOVED AND RESET UNLESS OTHERWISE NOTED.
4. ALL EXISTING FEATURES AT BACK OF SIDEWALK SHALL REMAIN IN PLACE UNLESS OTHERWISE NOTED. DAMAGES OR DISLODGING OF FEATURES AT BACK OF SIDEWALK SHALL BE REPAIRED/REPLACED BY THE CONTRACTOR AT NO ADDITIONAL COST TO THE PRIVATE PROPERTY OWNER OR OWNERS.
5. CONTRACTOR SHALL MATCH THE EXISTING GRADE AT THE LIMIT OF PROPOSED COLD PLANE AND OVERLAY. THE JOINT BETWEEN EXISTING AND PROPOSED PAVEMENT SHALL BE TREATED WITH INFRARED PAVEMENT SEALANT AND HOT POURED RUBBERIZED ASPHALT SEALER.
6. CONTRACTOR SHALL REMOVE ALL EXISTING SIGNS FROM UTILITY POLES. REFER TO SHEETS TR-1.20 TO TR-1.27 FOR PROPOSED SIGNS AND THEIR LOCATIONS.
7. CONTRACTOR SHALL NOT PERFORM ANY WORK ON PRIVATE PROPERTY UNTIL A SIGNED RIGHT-OF-ENTRY (ROE) IS RECEIVED BY DPW FROM THE PROPERTY OWNER. THE CONTRACTOR IS RESPONSIBLE FOR COORDINATING WITH THE PROPERTY OWNER.
8. CONTRACTOR SHALL MAINTAIN A MINIMUM OF 3'-0" WIDE SIDEWALK BEHIND EXISTING TREES AND 4'-0" WIDE SIDEWALK BEHIND PROPOSED TREE LOCATIONS UNLESS THE SIDEWALK HAS BEEN IDENTIFIED ON THE PLANS AS BEING WITHIN AN ADA VARIANCE LOCATION.
9. WHERE SIDEWALKS ARE LESS THAN 5' WIDE, PASSING ZONES HAVE BEEN IDENTIFIED EVERY 200' WITHIN ACCESSIBLE ROUTES. PASSING ZONES SHALL BE A MINIMUM SIZE OF 5'X5' AND HAVE A MAXIMUM SLOPE OF 1.5% IN ALL DIRECTIONS. ADA ACCESSIBLE ROUTES ARE NOTED ON THE DRAWINGS.
10. LOCATIONS WHERE CONCRETE OR BRICK SIDEWALKS ARE UNABLE TO BE INSTALLED DUE TO THE PRESENCE OF ROOTS AT EXISTING TREES, APPROXIMATE LIMITS OF FLEXI-PAVE ARE INDICATED ON THE DRAWINGS. LIMITS OF FLEXI-PAVE SHALL BE FINALIZED IN THE FIELD UPON THE REMOVAL OF THE EXISTING SIDEWALK AND REVIEW OF ROOT LOCATIONS. FOR FLEXIBLE POROUS PAVING, REFER TO SPECIFICATION.

LEGEND:

- PROPOSED CEMENT CONCRETE SIDEWALK
- PROPOSED WIRECUT BRICK SIDEWALK
- PROPOSED FLEXIPAVE WALK
- PROPOSED PLANTING SOIL AREA
- PROPOSED CEMENT CONCRETE DRIVEWAY
- PROPOSED BRICK DRIVEWAY
- PROPOSED HMA DRIVEWAY
- PROPOSED COBBLESTONE OR FIELDSTONE DRIVEWAY
- PROPOSED GRAVEL DRIVEWAY
- MACTH EXIST. DRIVEWAY PAVEMENT
- PROPOSED TREE
- EXIST. TREE

PLAN

0 20 50 100

SCALE: 1" = 20'

ISSUED FOR BID

HDR ENGINEERING, INC.
99 HIGH STREET, SUITE 2300
BOSTON, MASSACHUSETTS 02110-2378
(617) 357-7700

COMMONWEALTH OF MASSACHUSETTS
PHILIP FUSCO
CIVIL
No. 45868
REGISTERED PROFESSIONAL ENGINEER

Scale			
Date			
Job No.			
Designed by			
Drawn by			
Checked by	No.	Description	Date
Approved by	REVISIONS		

THE WORKS — CAMBRIDGE DEPARTMENT OF PUBLIC

Client: CITY OF CAMBRIDGE, MA	Sheet: R-1.23
Project: RIVER STREET INFRASTRUCTURE AND STREETSCAPE PROJECT	Total Sheets: 381
Drawing: **ROADWAY CONSTRUCTION PLAN - 23**	File No.

File: C:\PW\WORKING\EAST01\D07863968412R_HD\CNS_CONSTRUCTION PLANS).DWG Plotted: 4/19/2022 1:51:24 PM

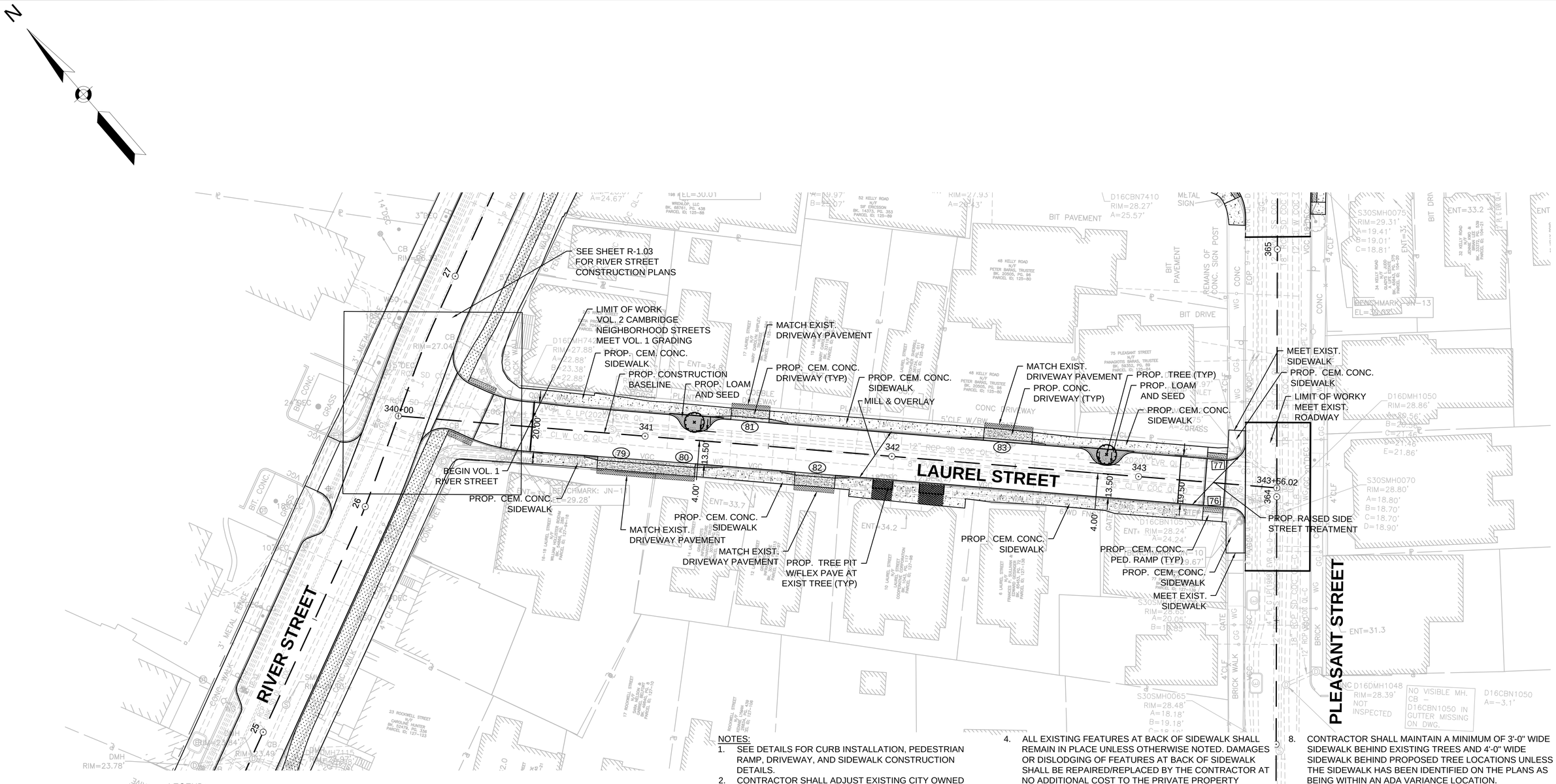
N
SEE SHEET R-1.03 FOR RIVER STREET CONSTRUCTION PLANS
LIMIT OF WORK VOL. 2 CAMBRIDGE NEIGHBORHOOD STREETS MEET VOL. 1 GRADING
PROP. CEM. CONC. SIDEWALK
PROP. CONSTRUCTION BASELINE
PROP. LOAM AND SEED
MATCH EXIST. DRIVEWAY PAVEMENT
PROP. CEM. CONC. DRIVEWAY (TYP)
PROP. CEM. CONC. SIDEWALK
MILL & OVERLAY
MATCH EXIST. DRIVEWAY PAVEMENT
PROP. CONC. DRIVEWAY (TYP)
PROP. TREE (TYP)
PROP. LOAM AND SEED
PROP. CEM. CONC. SIDEWALK
MEET EXIST. SIDEWALK
PROP. CEM. CONC. SIDEWALK
LIMIT OF WORKY MEET EXIST. ROADWAY
PROP. RAISED SIDE STREET TREATMENT
BEGIN VOL. 1 RIVER STREET
PROP. CEM. CONC. SIDEWALK
MATCH EXIST. DRIVEWAY PAVEMENT
PROP. CEM. CONC. SIDEWALK
MATCH EXIST. DRIVEWAY PAVEMENT
PROP. TREE PIT W/FLEX PAVE AT EXIST TREE (TYP)
PROP. CEM. CONC. SIDEWALK
PROP. CEM. CONC. PED. RAMP (TYP)
PROP. CEM. CONC. SIDEWALK
MEET EXIST. SIDEWALK
LAUREL STREET
RIVER STREET
PLEASANT STREET
340+00
341
342
343
343+56.02
20.00
13.50
4.00
BENCHMARK: JN–1
EL=29.28'
BENCHMARK: JN–13
EL=30.69'
D16CBN7410
RIM=28.27'
A=25.57'
D16DMH1050
RIM=28.86'
D16CBN1050
A=–3.1'
D16DMH1048
RIM=28.39'
NOT INSPECTED
NO VISIBLE MH. CB – D16CBN1050 IN GUTTER MISSING ON DWG.
S30SMH0070
RIM=28.80'
S30SMH0075
RIM=29.31'
S30SMH0065
RIM=28.48'
D16CBN7415
RIM=28.24'
A=24.24'
D16CBN1051
RIM=28.24'
A=24.24'
D16CBN1052
RIM=28.24'
A=24.24'
D16CBN1053
RIM=28.24'
A=24.24'
D16CBN1054
RIM=28.24'
A=24.24'
D16CBN1055
RIM=28.24'
A=24.24'
D16DMH7115
RIM=23.49'
D16DMH7116
RIM=23.78'
D16CBN7420
RIM=23.84'
D16DMH7117
RIM=23.78'
D16DMH7118
RIM=23.78'
D16DMH7119
RIM=23.78'
D16DMH7120
RIM=23.78'
D16DMH7121
RIM=23.78'
D16DMH7122
RIM=23.78'
D16DMH7123
RIM=23.78'
D16DMH7124
RIM=23.78'
D16DMH7125
RIM=23.78'
D16DMH7126
RIM=23.78'
D16DMH7127
RIM=23.78'
D16DMH7128
RIM=23.78'
D16DMH7129
RIM=23.78'
D16DMH7130
RIM=23.78'
D16DMH7131
RIM=23.78'
D16DMH7132
RIM=23.78'
D16DMH7133
RIM=23.78'
D16DMH7134
RIM=23.78'
D16DMH7135
RIM=23.78'
D16DMH7136
RIM=23.78'

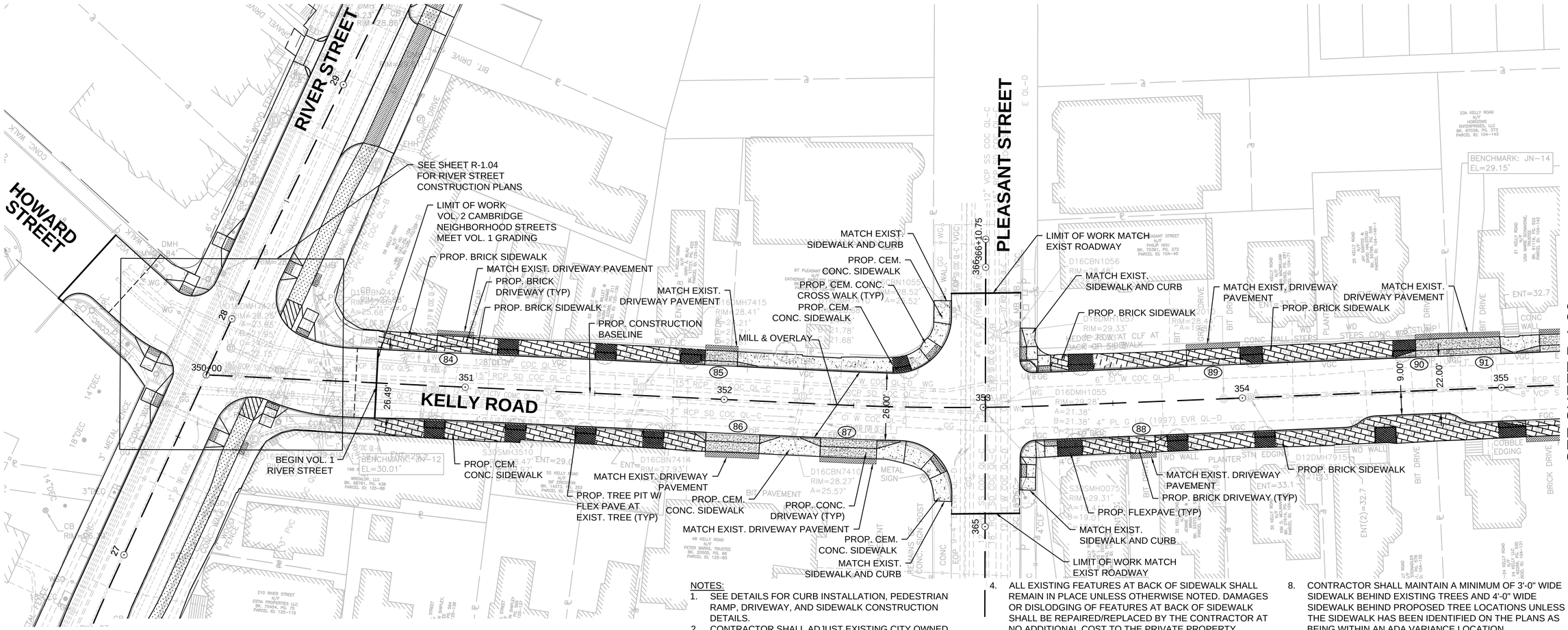

NOTES:

1. SEE DETAILS FOR CURB INSTALLATION, PEDESTRIAN RAMP, DRIVEWAY, AND SIDEWALK CONSTRUCTION DETAILS.
2. CONTRACTOR SHALL ADJUST EXISTING CITY OWNED UTILITY COVERS AND CASTINGS TO RE-GRADED SURFACES. THE CONTRACTOR TO COORDINATE WITH RESPECTIVE UTILITIES COMPANIES FOR GAS/TELECOM/CABLE/ELECTRIC.
3. ALL VERTICAL GRANITE CURBING MEETING THE SPECIFICATIONS AND WITH APPROVAL OF THE OWNER SHALL BE REMOVED AND RESET UNLESS OTHERWISE NOTED.
4. ALL EXISTING FEATURES AT BACK OF SIDEWALK SHALL REMAIN IN PLACE UNLESS OTHERWISE NOTED. DAMAGES OR DISLODGING OF FEATURES AT BACK OF SIDEWALK SHALL BE REPAIRED/REPLACED BY THE CONTRACTOR AT NO ADDITIONAL COST TO THE PRIVATE PROPERTY OWNER OR OWNERS.
5. CONTRACTOR SHALL MATCH THE EXISTING GRADE AT THE LIMIT OF PROPOSED COLD PLANE AND OVERLAY. THE JOINT BETWEEN EXISTING AND PROPOSED PAVEMENT SHALL BE TREATED WITH INFRARED PAVEMENT SEALANT AND HOT POURED RUBBERIZED ASPHALT SEALER.
6. CONTRACTOR SHALL REMOVE ALL EXISTING SIGNS FROM UTILITY POLES. REFER TO SHEETS TR-1.20 TO TR-1.27 FOR PROPOSED SIGNS AND THEIR LOCATIONS.
7. CONTRACTOR SHALL NOT PERFORM ANY WORK ON PRIVATE PROPERTY UNTIL A SIGNED RIGHT-OF-ENTRY (ROE) IS RECEIVED BY DPW FROM THE PROPERTY OWNER. THE CONTRACTOR IS RESPONSIBLE FOR COORDINATING WITH THE PROPERTY OWNER.
8. CONTRACTOR SHALL MAINTAIN A MINIMUM OF 3'-0" WIDE SIDEWALK BEHIND EXISTING TREES AND 4'-0" WIDE SIDEWALK BEHIND PROPOSED TREE LOCATIONS UNLESS THE SIDEWALK HAS BEEN IDENTIFIED ON THE PLANS AS BEING WITHIN AN ADA VARIANCE LOCATION.
9. WHERE SIDEWALKS ARE LESS THAN 5' WIDE, PASSING ZONES HAVE BEEN IDENTIFIED EVERY 200' WITHIN ACCESSIBLE ROUTES. PASSING ZONES SHALL BE A MINIMUM SIZE OF 5'X5' AND HAVE A MAXIMUM SLOPE OF 1.5% IN ALL DIRECTIONS. ADA ACCESSIBLE ROUTES ARE NOTED ON THE DRAWINGS.
10. LOCATIONS WHERE CONCRETE OR BRICK SIDEWALKS ARE UNABLE TO BE INSTALLED DUE TO THE PRESENCE OF ROOTS AT EXISTING TREES, APPROXIMATE LIMITS OF FLEXI-PAVE ARE INDICATED ON THE DRAWINGS. LIMITS OF FLEXI-PAVE SHALL BE FINALIZED IN THE FIELD UPON THE REMOVAL OF THE EXISTING SIDEWALK AND REVIEW OF ROOT LOCATIONS. FOR FLEXIBLE POROUS PAVING, REFER TO SPECIFICATION.

LEGEND:

- PROPOSED CEMENT CONCRETE SIDEWALK
- PROPOSED WIRECUT BRICK SIDEWALK
- PROPOSED FLEXIPAVE WALK
- PROPOSED PLANTING SOIL AREA
- PROPOSED CEMENT CONCRETE DRIVEWAY
- PROPOSED BRICK DRIVEWAY
- PROPOSED HMA DRIVEWAY
- PROPOSED COBBLESTONE OR FIELDSTONE DRIVEWAY
- PROPOSED GRAVEL DRIVEWAY
- MACTH EXIST. DRIVEWAY PAVEMENT
- PROPOSED TREE
- EXIST. TREE

PLAN

0 20 50 100

SCALE: 1" = 20'

ISSUED FOR BID

HDR ENGINEERING, INC.
99 HIGH STREET, SUITE 2300
BOSTON, MASSACHUSETTS 02110-2378
(617) 357-7700

COMMONWEALTH OF MASSACHUSETTS PHILIP FUSCO CIVIL No. 45868 REGISTERED PROFESSIONAL ENGINEER

Scale			
Date			
Job No.			
Designed by			
Drawn by			
Checked by	No.	Description	Date
Approved by	REVISIONS		

CAMBRIDGE DEPARTMENT OF PUBLIC THE WORKS

Client: CITY OF CAMBRIDGE, MA

Project: RIVER STREET INFRASTRUCTURE AND STREETSCAPE PROJECT

Drawing: **ROADWAY CONSTRUCTION PLAN - 25**

Sheet: R-1.25

Total Sheets: 381

File No.

File: C:\PWWORKING\EAST01\D0786396\8412R_HD\CNS_CONSTRUCTION PLANS).DWG Plotted: 4/19/2022 1:51:44 PM

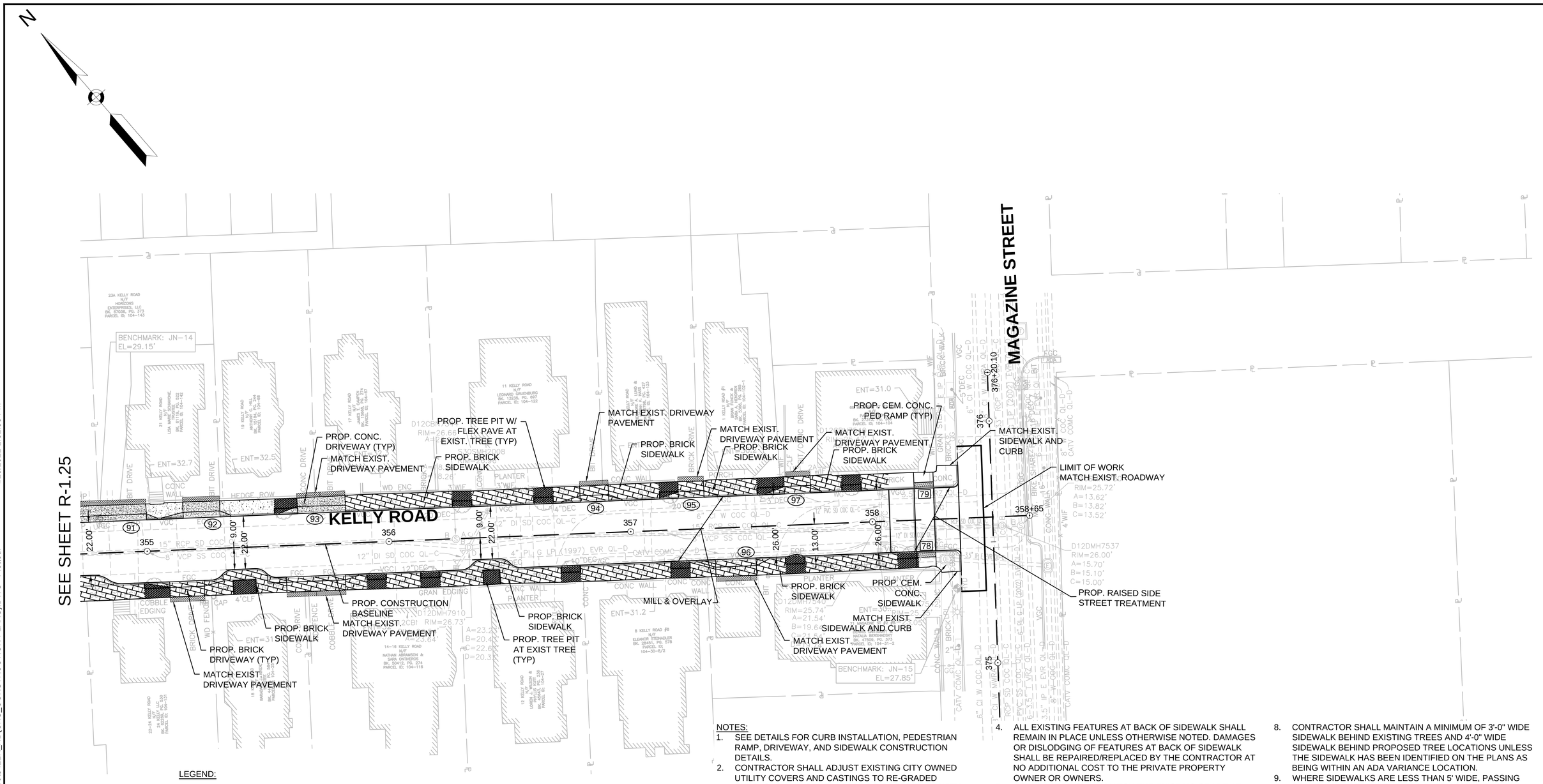

LEGEND:

- PROPOSED CEMENT CONCRETE SIDEWALK
- PROPOSED WIRECUT BRICK SIDEWALK
- PROPOSED FLEXIPAVE WALK
- PROPOSED PLANTING SOIL AREA
- PROPOSED CEMENT CONCRETE DRIVEWAY
- PROPOSED BRICK DRIVEWAY
- PROPOSED HMA DRIVEWAY
- PROPOSED COBBLESTONE OR FIELDSTONE DRIVEWAY
- PROPOSED GRAVEL DRIVEWAY
- MACTH EXIST. DRIVEWAY PAVEMENT
- PROPOSED TREE
- EXIST. TREE

NOTES:

1. SEE DETAILS FOR CURB INSTALLATION, PEDESTRIAN RAMP, DRIVEWAY, AND SIDEWALK CONSTRUCTION DETAILS.
2. CONTRACTOR SHALL ADJUST EXISTING CITY OWNED UTILITY COVERS AND CASTINGS TO RE-GRADED SURFACES. THE CONTRACTOR TO COORDINATE WITH RESPECTIVE UTILITIES COMPANIES FOR GAS/TELECOM/CABLE/ELECTRIC.
3. ALL VERTICAL GRANITE CURBING MEETING THE SPECIFICATIONS AND WITH APPROVAL OF THE OWNER SHALL BE REMOVED AND RESET UNLESS OTHERWISE NOTED.
4. ALL EXISTING FEATURES AT BACK OF SIDEWALK SHALL REMAIN IN PLACE UNLESS OTHERWISE NOTED. DAMAGES OR DISLODGING OF FEATURES AT BACK OF SIDEWALK SHALL BE REPAIRED/REPLACED BY THE CONTRACTOR AT NO ADDITIONAL COST TO THE PRIVATE PROPERTY OWNER OR OWNERS.
5. CONTRACTOR SHALL MATCH THE EXISTING GRADE AT THE LIMIT OF PROPOSED COLD PLANE AND OVERLAY. THE JOINT BETWEEN EXISTING AND PROPOSED PAVEMENT SHALL BE TREATED WITH INFRARED PAVEMENT SEALANT AND HOT POURED RUBBERIZED ASPHALT SEALER.
6. CONTRACTOR SHALL REMOVE ALL EXISTING SIGNS FROM UTILITY POLES. REFER TO SHEETS TR-1.20 TO TR-1.27 FOR PROPOSED SIGNS AND THEIR LOCATIONS.
7. CONTRACTOR SHALL NOT PERFORM ANY WORK ON PRIVATE PROPERTY UNTIL A SIGNED RIGHT-OF-ENTRY (ROE) IS RECEIVED BY DPW FROM THE PROPERTY OWNER. THE CONTRACTOR IS RESPONSIBLE FOR COORDINATING WITH THE PROPERTY OWNER.
8. CONTRACTOR SHALL MAINTAIN A MINIMUM OF 3'-0" WIDE SIDEWALK BEHIND EXISTING TREES AND 4'-0" WIDE SIDEWALK BEHIND PROPOSED TREE LOCATIONS UNLESS THE SIDEWALK HAS BEEN IDENTIFIED ON THE PLANS AS BEING WITHIN AN ADA VARIANCE LOCATION.
9. WHERE SIDEWALKS ARE LESS THAN 5' WIDE, PASSING ZONES HAVE BEEN IDENTIFIED EVERY 200' WITHIN ACCESSIBLE ROUTES. PASSING ZONES SHALL BE A MINIMUM SIZE OF 5'X5' AND HAVE A MAXIMUM SLOPE OF 1.5% IN ALL DIRECTIONS. ADA ACCESSIBLE ROUTES ARE NOTED ON THE DRAWINGS.
10. LOCATIONS WHERE CONCRETE OR BRICK SIDEWALKS ARE UNABLE TO BE INSTALLED DUE TO THE PRESENCE OF ROOTS AT EXISTING TREES, APPROXIMATE LIMITS OF FLEXI-PAVE ARE INDICATED ON THE DRAWINGS. LIMITS OF FLEXI-PAVE SHALL BE FINALIZED IN THE FIELD UPON THE REMOVAL OF THE EXISTING SIDEWALK AND REVIEW OF ROOT LOCATIONS. FOR FLEXIBLE POROUS PAVING, REFER TO SPECIFICATION.

PLAN

0 20 50 100

SCALE: 1" = 20'

ISSUED FOR BID

HDR ENGINEERING, INC.
99 HIGH STREET, SUITE 2300
BOSTON, MASSACHUSETTS 02110-2378
(617) 357-7700

COMMONWEALTH OF MASSACHUSETTS
PHILIP FUSCO
CIVIL
No. 45868
REGISTERED PROFESSIONAL ENGINEER

Scale			
Date			
Job No.			
Designed by			
Drawn by			
Checked by	No.	Description	Date
Approved by	REVISIONS		

CAMBRIDGE DEPARTMENT OF PUBLIC WORKS

Client: CITY OF CAMBRIDGE, MA

Project: RIVER STREET
INFRASTRUCTURE AND STREETSCAPE PROJECT

Drawing: **ROADWAY CONSTRUCTION PLAN - 26**

Sheet: R-1.26

Total Sheets: 381

File No.

File: C:\PWWORKING\EAST01\D07863968\R412R_HD\CNS_CONSTRUCTION PLANS).DWG Plotted: 4/19/2022 1:51:53 PM

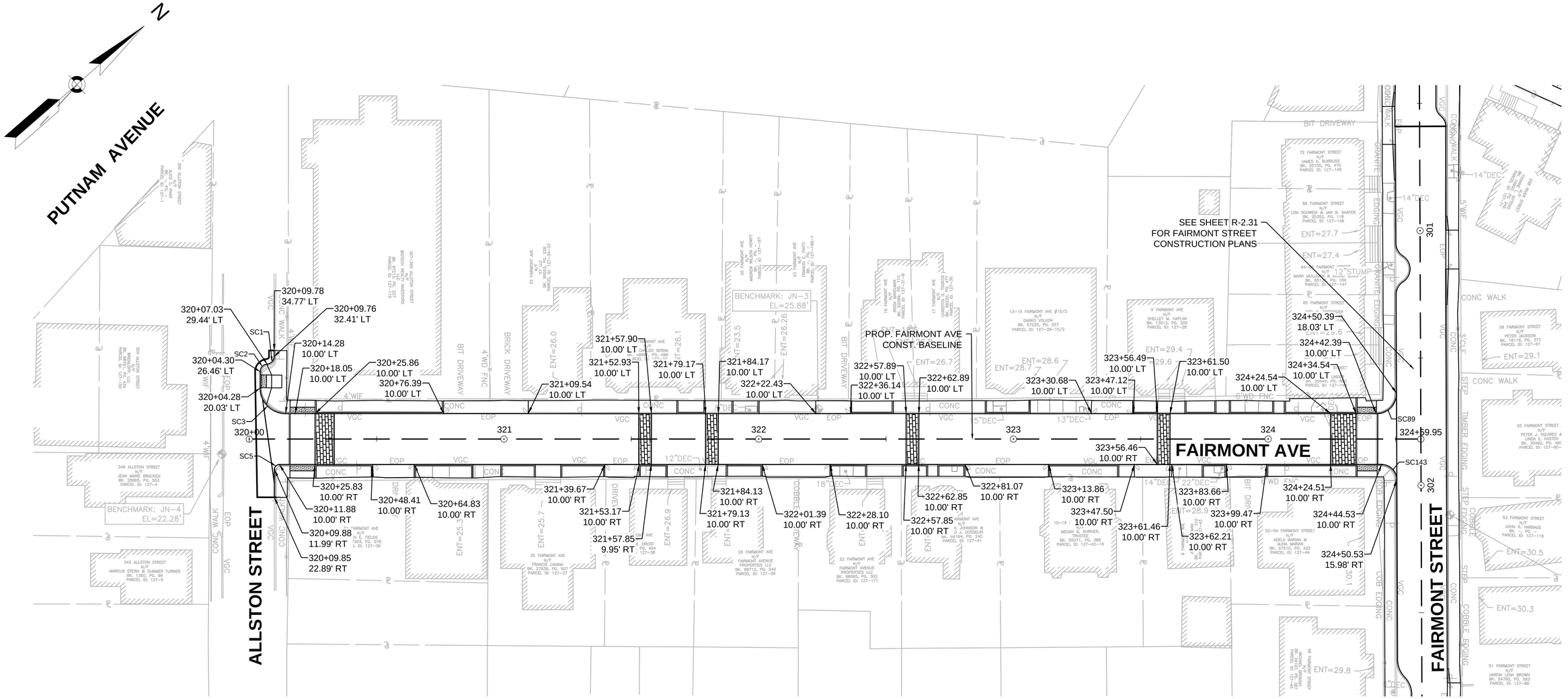

Curve Table			
Curve #	Delta	Radius	Length
SC1	84°27'16"	3.00	4.42
SC2	84°38'39"	3.00	4.43
SC3	90°11'00"	10.00	15.74
SC5	89°50'49"	2.00	3.14
SC89	90°14'05"	8.00	12.60
SC143	89°45'55"	6.00	9.40

PLAN

0 20 50 100

SCALE: 1" = 20'

ISSUED FOR BID

HDR ENGINEERING, INC.
99 HIGH STREET, SUITE 2300
BOSTON, MASSACHUSETTS 02110-2378
(617) 357-7700

PHILIP FUSCO CIVIL No. 45868 REGISTERED PROFESSIONAL ENGINEER
COMMONWEALTH OF MASSACHUSETTS

Scale			
Date			
Job No.			
Designed by			
Drawn by			
Checked by	No.	Description	Date
Approved by	REVISIONS		

CAMBRIDGE DEPARTMENT OF PUBLIC THE WORKS

Client: CITY OF CAMBRIDGE, MA

Project: RIVER STREET
INFRASTRUCTURE AND STREETSCAPE PROJECT

Drawing: **ROADWAY CURB TIE AND ALIGNMENT PLAN - 20**

Sheet: R-2.20

Total Sheets: 381

File No.

File: C:\PW\WORKING\EAST01\D0786396\8412R_HD\CNS_CURB TIE PLANS).DWG Plotted: 4/19/2022 1:52:18 PM

Curve Table			
Curve #	Delta	Radius	Length
SC8	57°11'28"	6.00	5.99
SC9	114°22'57"	6.00	11.98
SC11	57°11'28"	6.00	5.99
SC13	89°20'52"	6.00	9.36
SC17	90°08'33"	12.00	18.88
SC18	43°31'21"	10.00	7.60
SC19	43°31'21"	10.00	7.60
SC144	43°31'52"	10.00	7.60
SC145	43°31'52"	10.00	7.60
SC146	43°31'52"	10.00	7.60
SC147	43°31'52"	10.00	7.60

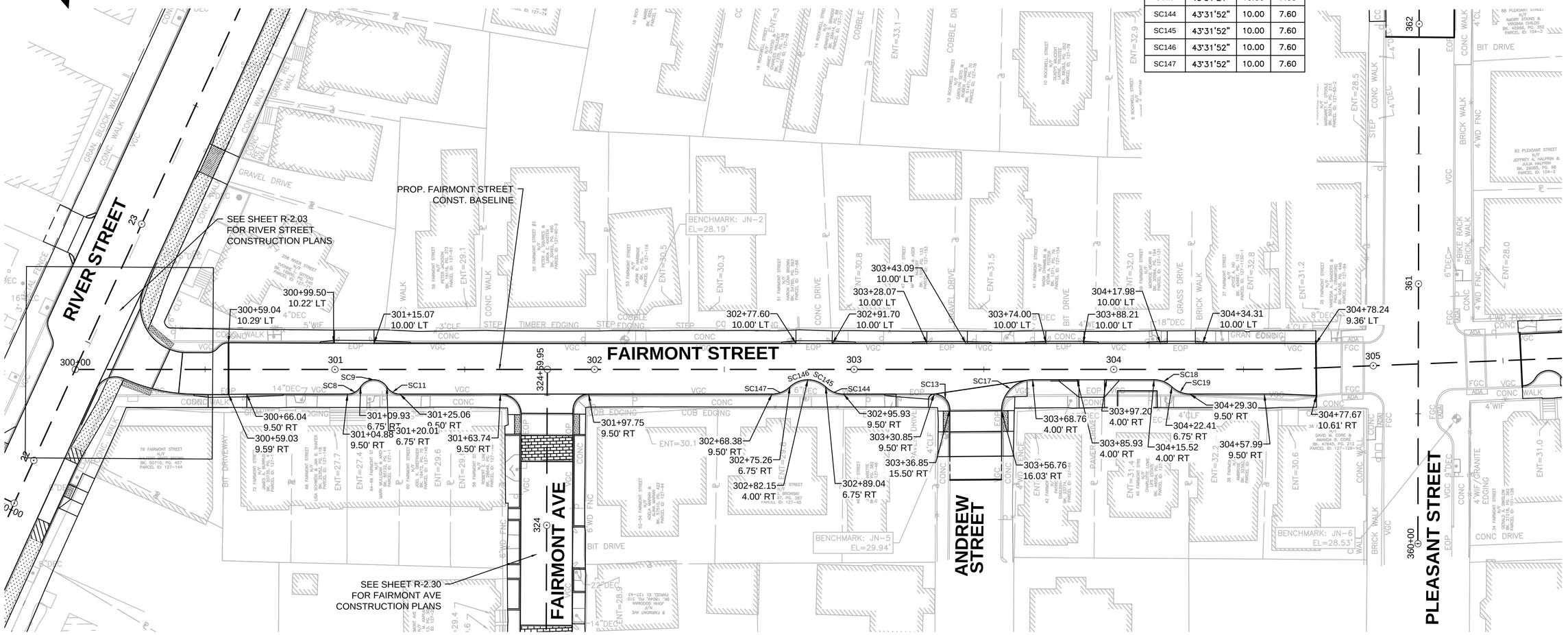

PLAN

0 20 50 100

SCALE: 1" = 20'

ISSUED FOR BID

HDR ENGINEERING, INC.
99 HIGH STREET, SUITE 2300
BOSTON, MASSACHUSETTS 02110-2378
(617) 357-7700

PHILIP FUSCO CIVIL No. 45868 REGISTERED PROFESSIONAL ENGINEER
COMMONWEALTH OF MASSACHUSETTS

Scale			
Date			
Job No.			
Designed by			
Drawn by			
Checked by	No.	Description	Date
Approved by	REVISIONS		

THE WORKS — CAMBRIDGE DEPARTMENT OF PUBLIC WORKS

Client: CITY OF CAMBRIDGE, MA

Project: RIVER STREET INFRASTRUCTURE AND STREETSCAPE PROJECT

Drawing: **ROADWAY CURB TIE AND ALIGNMENT PLAN - 21**

Sheet: R-2.21

Total Sheets: 381

File No.

File: C:\PW\WORKING\EAST01\D07863968\8412R_HD\CNS_CURB TIE PLANS).DWG Plotted: 4/19/2022 1:52:24 PM

Curve Table			
Curve #	Delta	Radius	Length
SC27	60°00'00"	6.00	6.28
SC93	57°12'10"	6.00	5.99
SC94	114°24'20"	6.00	11.98
SC95	114°24'20"	6.00	11.98
SC96	57°12'10"	6.00	5.99
SC104	60°00'00"	6.00	6.28
SC105	60°00'00"	6.00	6.28
SC106	60°00'00"	6.00	6.28
SC107	60°00'00"	6.00	6.28
SC108	89°58'01"	2.00	3.14
SC109	60°00'00"	6.00	6.28
SC110	60°00'00"	6.00	6.28
SC111	90°01'38"	2.00	3.14
SC112	89°09'17"	2.00	3.11

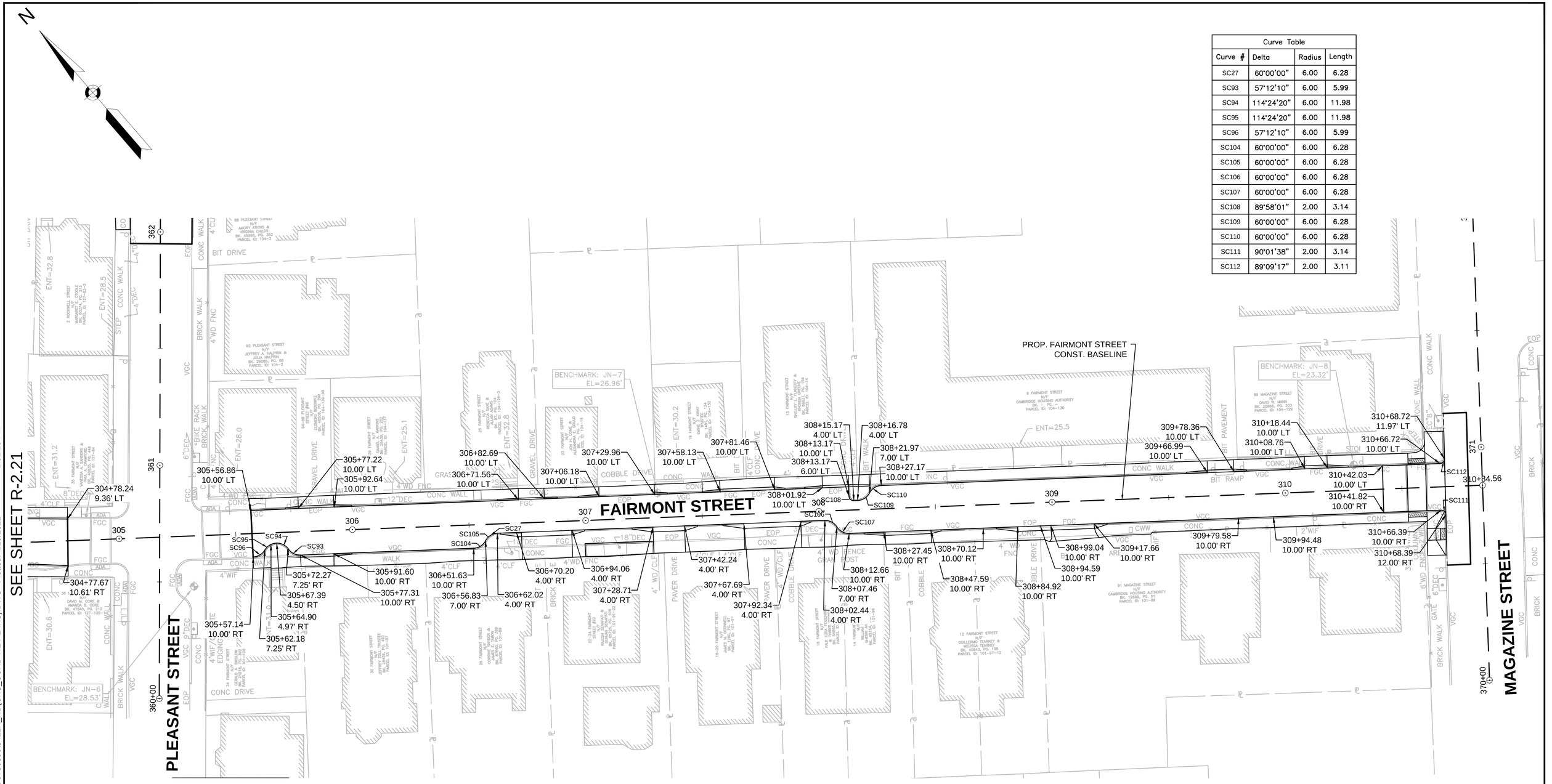

PLAN

0 20 50 100

SCALE: 1" = 20'

ISSUED FOR BID

SEE SHEET R-2.21

File: C:\PWWORKING\EAST01\D07863968412R_HD(CNS_CURB TIE PLANS).DWG Plotted: 4/19/2022 1:52:29 PM

HDR ENGINEERING, INC.
99 HIGH STREET, SUITE 2300
BOSTON, MASSACHUSETTS 02110-2378
(617) 357-7700

COMMONWEALTH OF MASSACHUSETTS
PHILIP FUSCO
CIVIL
No. 45868
REGISTERED PROFESSIONAL ENGINEER

Scale			
Date			
Job No.			
Designed by			
Drawn by			
Checked by	No.	Description	Date
Approved by	REVISIONS		

THE WORKS — CAMBRIDGE DEPARTMENT OF PUBLIC WORKS

Client	CITY OF CAMBRIDGE, MA	Sheet	R-2.22
Project	RIVER STREET INFRASTRUCTURE AND STREETSCAPE PROJECT	Total Sheets	381
Drawing	**ROADWAY CURB TIE AND ALIGNMENT PLAN - 22**	File No.	

Curve Table			
Curve #	Delta	Radius	Length
SC45	51°19'04"	6.00	5.37
SC48	51°19'04"	6.00	5.37
SC49	51°19'04"	6.00	5.37
SC113	87°49'55"	2.00	3.07
SC116	51°19'04"	6.00	5.37
SC118	51°19'04"	6.00	5.37
SC119	51°19'04"	6.00	5.37
SC120	51°19'04"	6.00	5.37
SC121	51°19'04"	6.00	5.37
SC122	51°19'04"	6.00	5.37
SC148	10°27'55"	100.00	18.27
SC149	51°19'04"	6.00	5.37
SC150	51°19'04"	6.00	5.37
SC151	51°19'04"	6.00	5.37
SC152	89°45'05"	2.00	3.13

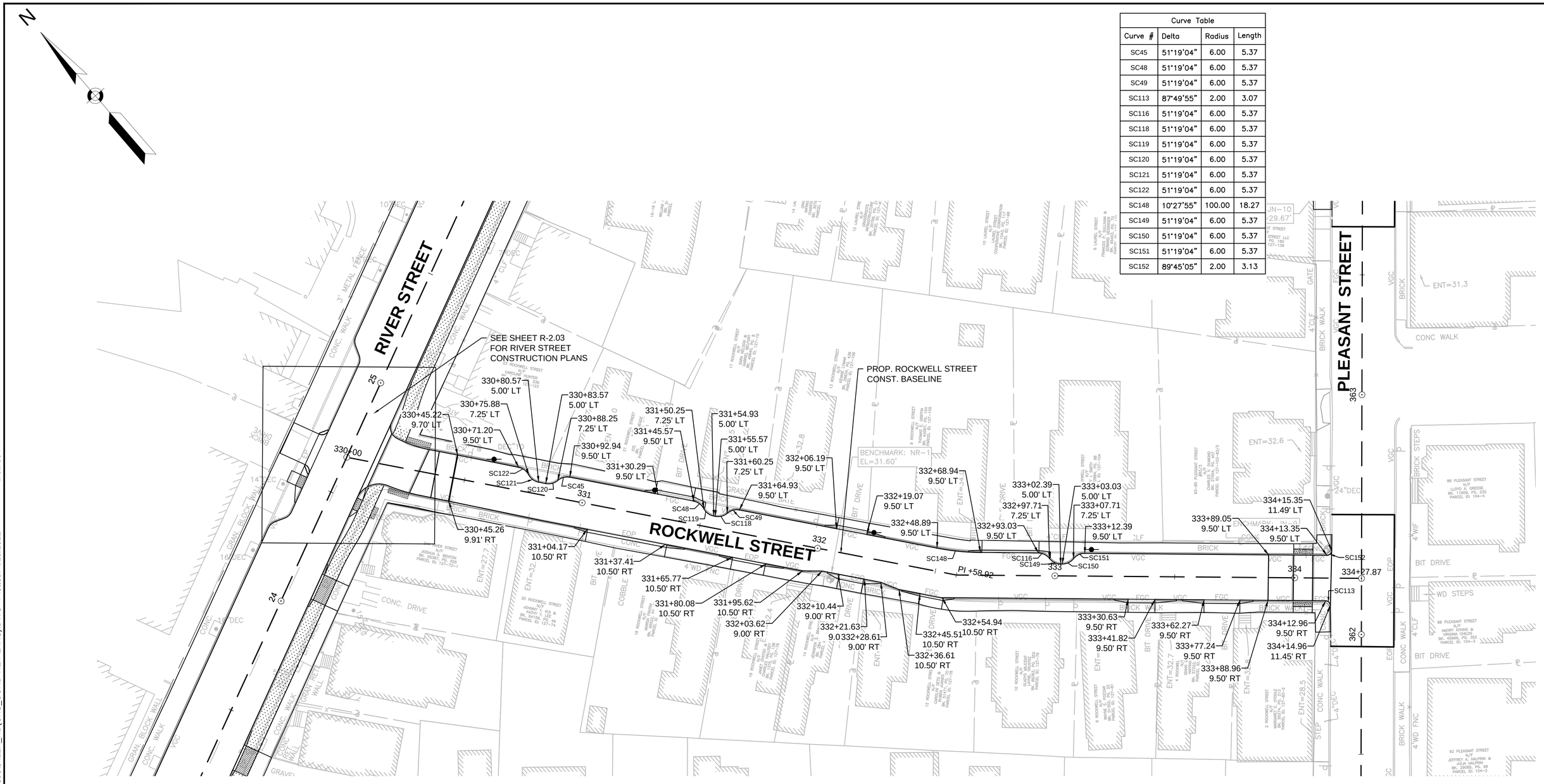

PLAN

0 20 50 100

SCALE: 1" = 20'

ISSUED FOR BID

HDR ENGINEERING, INC.
99 HIGH STREET, SUITE 2300
BOSTON, MASSACHUSETTS 02110-2378
(617) 357-7700

COMMONWEALTH OF MASSACHUSETTS
PHILIP FUSCO CIVIL No. 45868
REGISTERED PROFESSIONAL ENGINEER

Scale			
Date			
Job No.			
Designed by			
Drawn by			
Checked by	No.	Description	Date
Approved by	REVISIONS		

CAMBRIDGE DEPARTMENT OF PUBLIC THE WORKS

Client	CITY OF CAMBRIDGE, MA	Sheet	R-2.23
Project	RIVER STREET INFRASTRUCTURE AND STREETSCAPE PROJECT	Total Sheets	381
Drawing	**ROADWAY CURB TIE AND ALIGNMENT PLAN - 23**	File No.	

File: C:\PW\WORKING\EAST01\D07863968412R_HD(CNS_CURB TIE PLANS).DWG Plotted: 4/19/2022 1:52:33 PM

Curve Table			
Curve #	Delta	Radius	Length
SC62	60°00'00"	6.50	6.81
SC123	60°00'00"	5.50	5.76
SC124	60°00'00"	6.50	6.81
SC125	60°00'00"	5.50	5.76
SC126	60°00'00"	5.50	5.76
SC127	60°00'00"	6.50	6.81
SC128	60°00'00"	6.50	6.81
SC129	60°00'00"	5.50	5.76
SC130	85°12'08"	6.00	8.92
SC131	94°44'24"	7.00	11.57

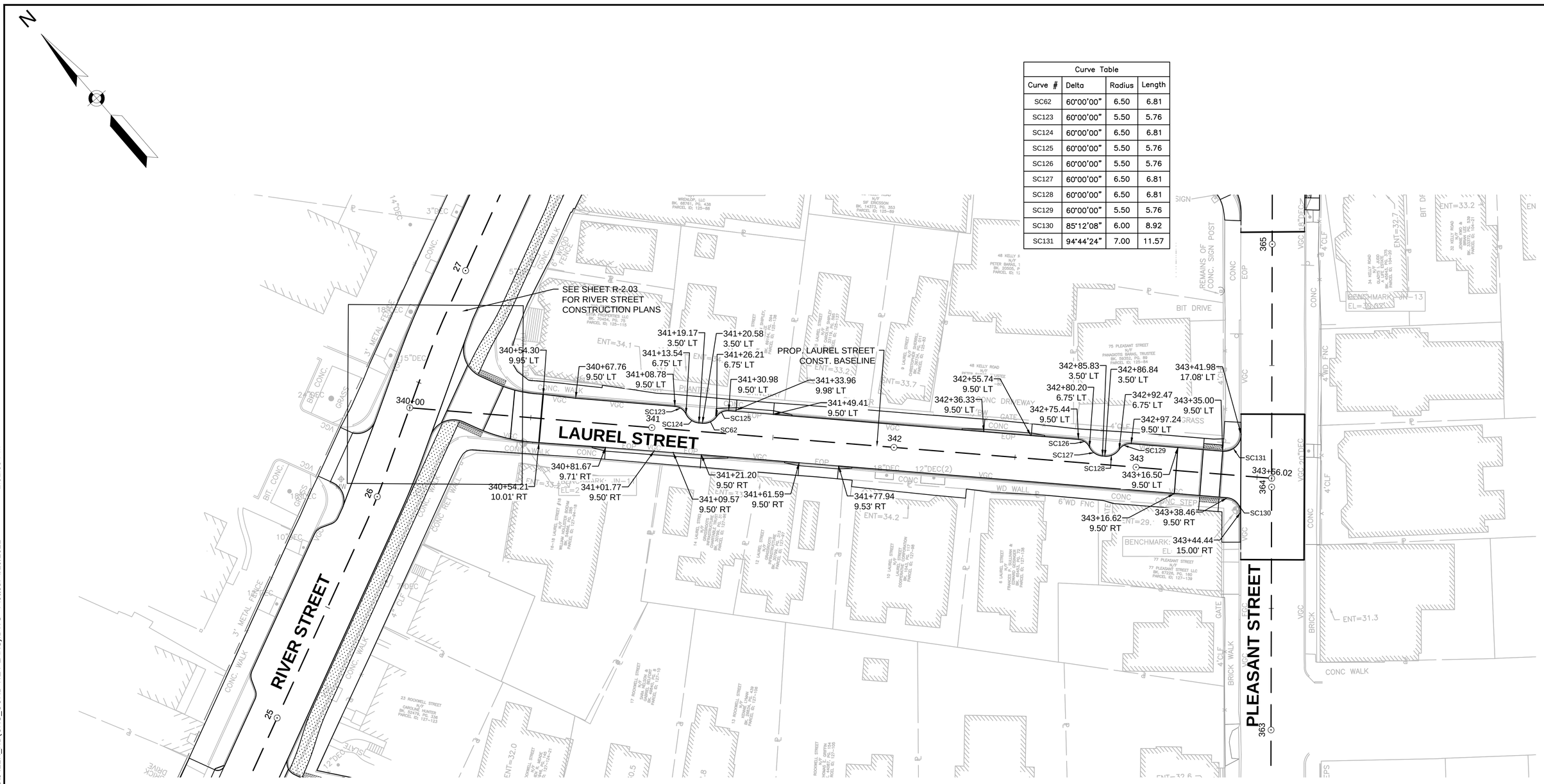

PLAN

0 20 50 100

SCALE: 1" = 20'

ISSUED FOR BID

HDR ENGINEERING, INC.
99 HIGH STREET, SUITE 2300
BOSTON, MASSACHUSETTS 02110–2378
(617) 357–7700

COMMONWEALTH OF MASSACHUSETTS
PHILIP FUSCO
CIVIL
No. 45868
REGISTERED PROFESSIONAL ENGINEER

Scale			
Date			
Job No.			
Designed by			
Drawn by			
Checked by	No.	Description	Date
Approved by	REVISIONS		

THE WORKS
CAMBRIDGE DEPARTMENT OF PUBLIC

Client: CITY OF CAMBRIDGE, MA

Project: RIVER STREET
INFRASTRUCTURE AND STREETSCAPE PROJECT

Drawing: **ROADWAY CURB TIE AND ALIGNMENT PLAN - 24**

Sheet: R-2.24

Total Sheets: 381

File No.

File: C:\PW\WORKING\EAST01\D07863968412R_HD\CNS_CURB TIE PLANS).DWG Plotted: 4/19/2022 1:52:38 PM

Curve Table			
Curve #	Delta	Radius	Length
SC73	86°13'51"	6.00	9.03
SC86	36°52'12"	10.00	6.44
SC87	36°52'12"	10.00	6.44
SC90	91°27'13"	22.00	35.12
SC91	92°07'39"	5.00	8.04
SC133	89°14'21"	20.00	31.15
SC136	36°52'12"	10.00	6.44
SC137	36°52'12"	10.00	6.44

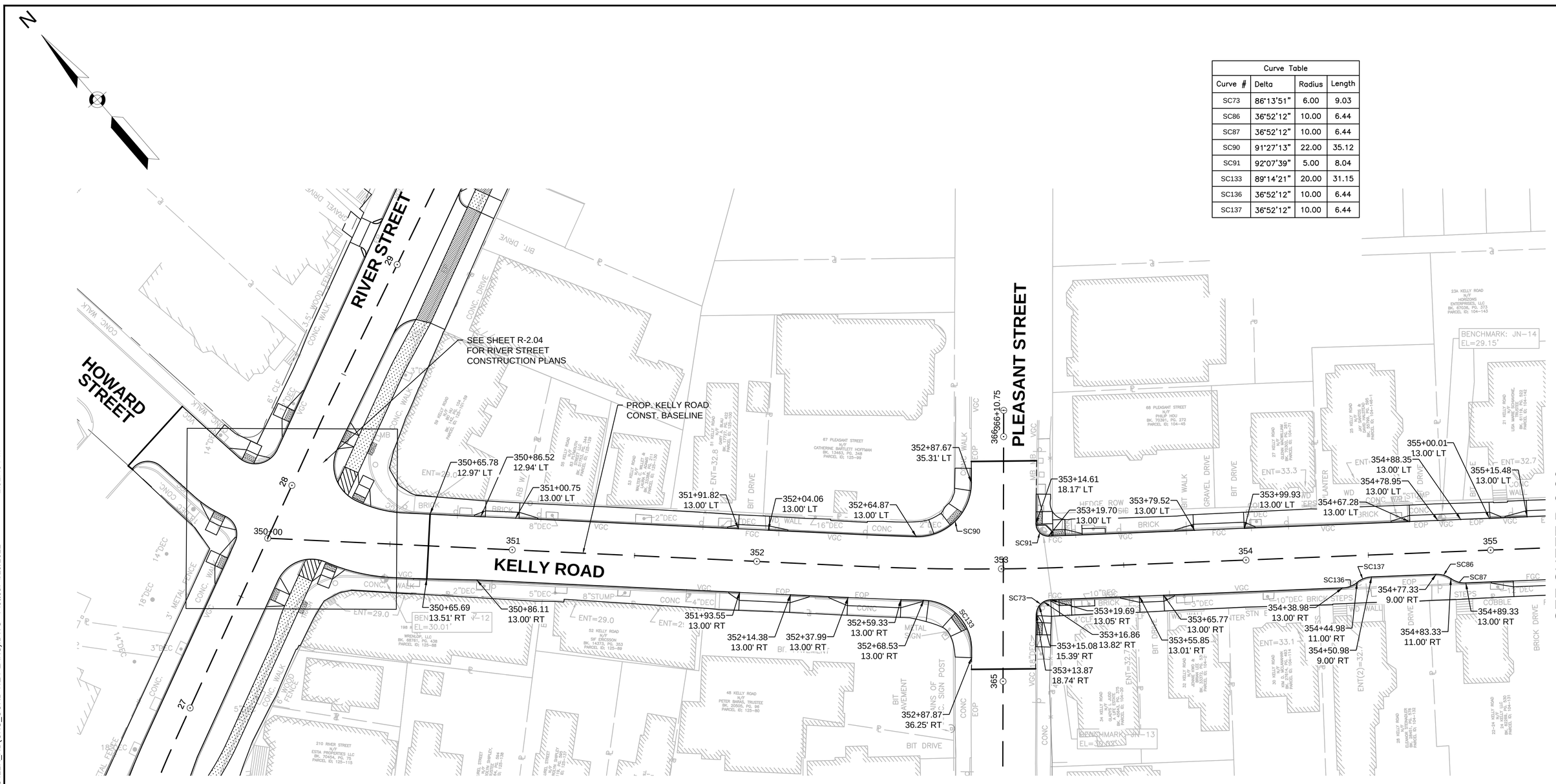

PLAN

0 20 50 100

SCALE: 1" = 20'

ISSUED FOR BID

HDR ENGINEERING, INC.
99 HIGH STREET, SUITE 2300
BOSTON, MASSACHUSETTS 02110-2378
(617) 357-7700

COMMONWEALTH OF MASSACHUSETTS
PHILIP FUSCO
CIVIL
No. 45868
REGISTERED PROFESSIONAL ENGINEER

Scale			
Date			
Job No.			
Designed by			
Drawn by			
Checked by	No.	Description	Date
Approved by	REVISIONS		

THE WORKS — CAMBRIDGE DEPARTMENT OF PUBLIC WORKS

Client: CITY OF CAMBRIDGE, MA

Project: RIVER STREET INFRASTRUCTURE AND STREETSCAPE PROJECT

Drawing: **ROADWAY CURB TIE AND ALIGNMENT PLAN - 25**

Sheet: R-2.25

Total Sheets: 381

File No.

File: C:\PWWORKING\EAST01\D0786396\8412R_HD\CNS_CURB TIE PLANS).DWG Plotted: 4/19/2022 1:52:43 PM

Curve Table			
Curve #	Delta	Radius	Length
SC78	48°11'23"	6.00	5.05
SC79	48°11'23"	6.00	5.05
SC81	48°11'23"	6.00	5.05
SC82	48°11'23"	6.00	5.05
SC84	48°13'17"	6.00	5.05
SC85	90°46'56"	2.00	3.17
SC88	51°49'51"	7.13	6.45
SC138	48°11'23"	6.00	5.05
SC139	48°11'23"	6.00	5.05
SC140	48°11'23"	6.00	5.05
SC141	89°45'21"	2.00	3.13

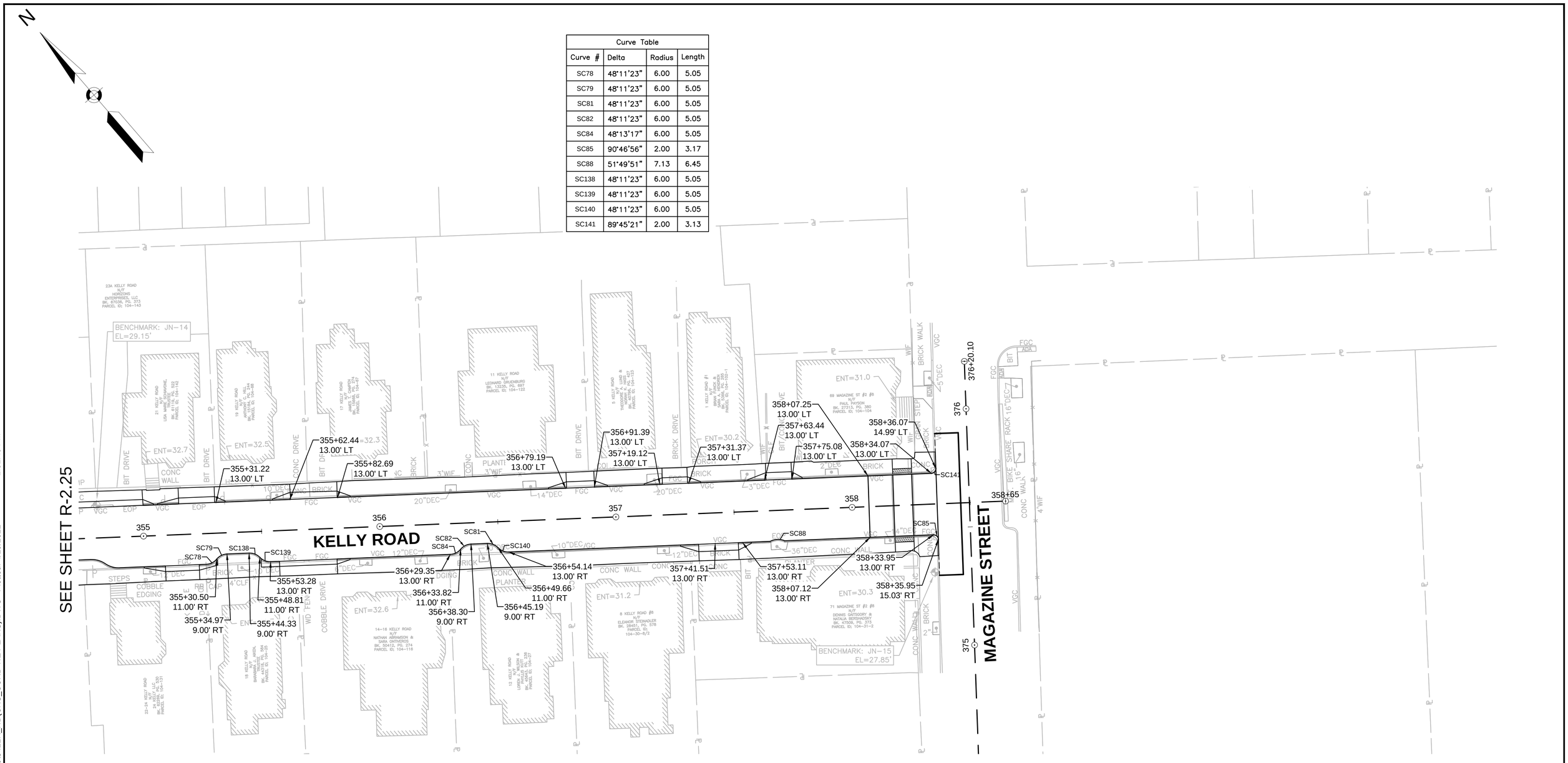

PLAN

0 20 50 100

SCALE: 1" = 20'

ISSUED FOR BID

HDR ENGINEERING, INC.
99 HIGH STREET, SUITE 2300
BOSTON, MASSACHUSETTS 02110-2378
(617) 357-7700

COMMONWEALTH OF MASSACHUSETTS
PHILIP FUSCO
CIVIL
No. 45868
REGISTERED PROFESSIONAL ENGINEER

Scale			
Date			
Job No.			
Designed by			
Drawn by			
Checked by	No.	Description	Date
Approved by	REVISIONS		

THE WORKS — CAMBRIDGE DEPARTMENT OF PUBLIC WORKS

Client	CITY OF CAMBRIDGE, MA	Sheet	R-2.26
Project	RIVER STREET INFRASTRUCTURE AND STREETSCAPE PROJECT	Total Sheets	381
Drawing	**ROADWAY CURB TIE AND ALIGNMENT PLAN - 26**	File No.	

File: C:\PWWORKING\EAST01\D0786396\R412R_HD(CNS_CURB TIE PLANS).DWG Plotted: 4/19/2022 1:52:49 PM

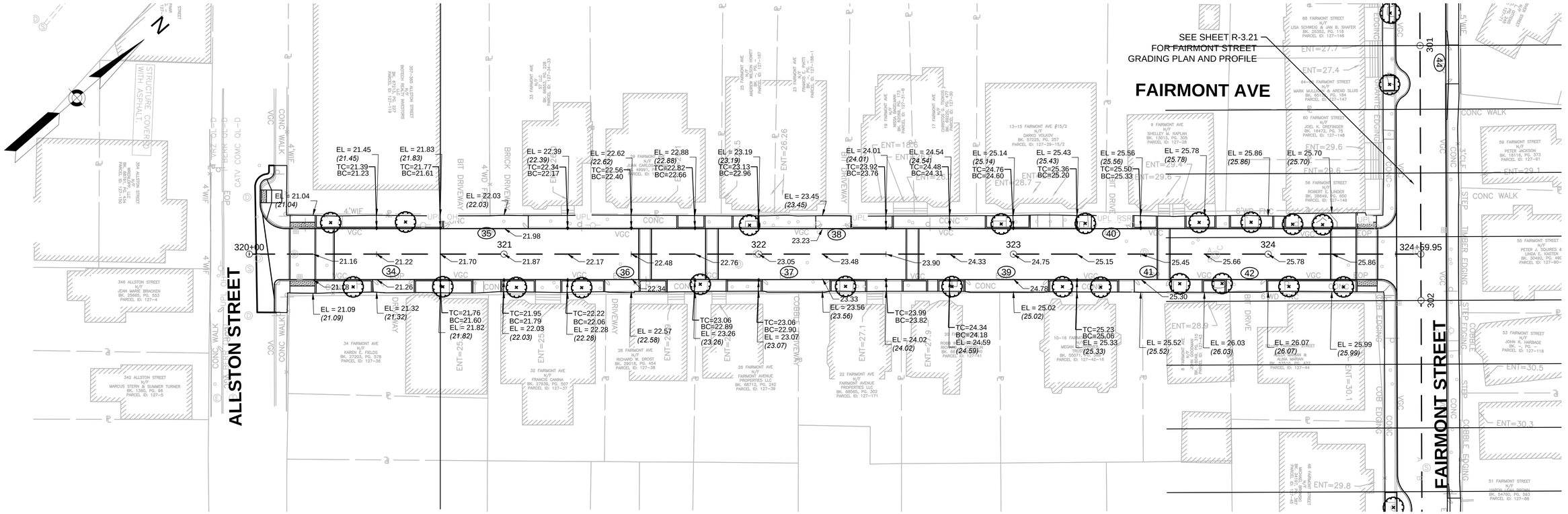

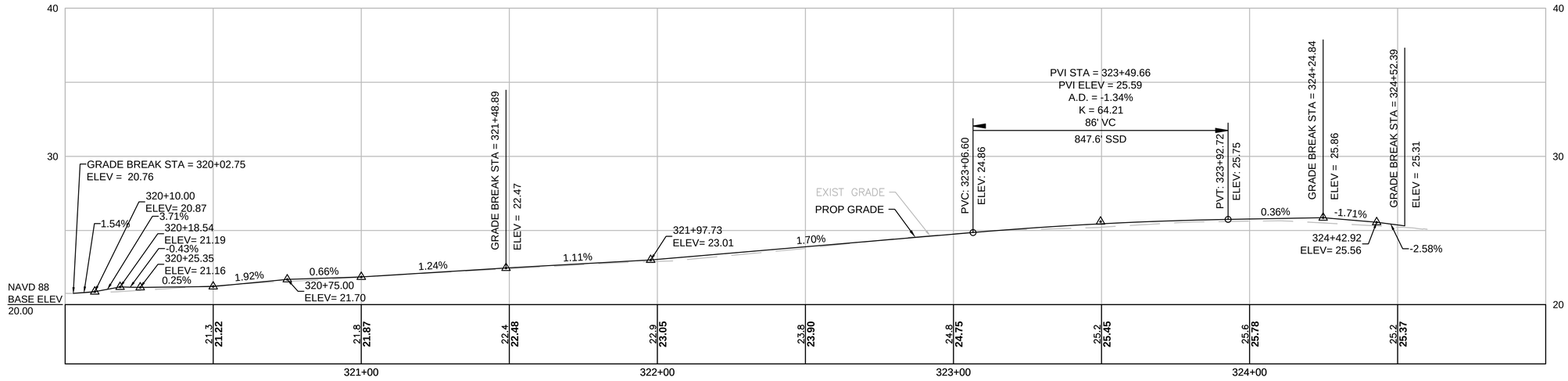

LEGEND

TC=20.64	PROPOSED TOP OF CURB ELEVATION
BC=20.64	PROPOSED BOTTOM OF CURB ELEVATION
0" REVEAL	CURB REVEAL
EL=20.64	PROPOSED ELEVATION AND
(20.64)	EXISTING ELEVATION
EL=20.64	PROPOSED ELEVATION ONLY

PLAN AND PROFILE - FAIRMONT AVENUE

HOR. SCALE IN FEET
20 0 20 40
VER. SCALE IN FEET
4 0 4 8

ISSUED FOR BID

HDR ENGINEERING, INC.
99 HIGH STREET, SUITE 2300
BOSTON, MASSACHUSETTS 02110-2378
(617) 357-7700

COMMONWEALTH OF MASSACHUSETTS
PHILIP FUSCO
CIVIL
No. 45868
REGISTERED PROFESSIONAL ENGINEER

Scale			
Date			
Job No.			
Designed by			
Drawn by			
Checked by	No.	Description	Date
Approved by	REVISIONS		

THE WORKS — CAMBRIDGE DEPARTMENT OF PUBLIC WORKS

Client: CITY OF CAMBRIDGE, MA	Sheet: R-3.20
Project: RIVER STREET INFRASTRUCTURE AND STREETSCAPE PROJECT	Total Sheets: 381
Drawing: **ROADWAY GRADING PLAN AND PROFILE- 20**	File No.

File: C:\PWWORKING\EAST\D0786396\8412R_HD(CNS_PROFILE).DWG Plotted: 4/19/2022 1:53:23 PM

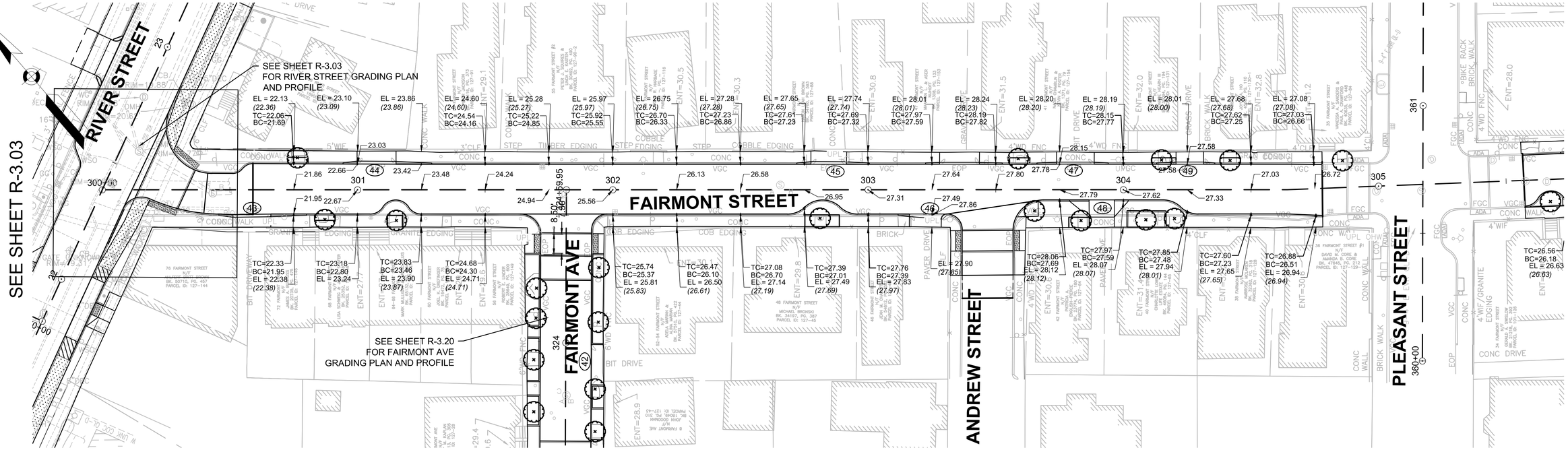

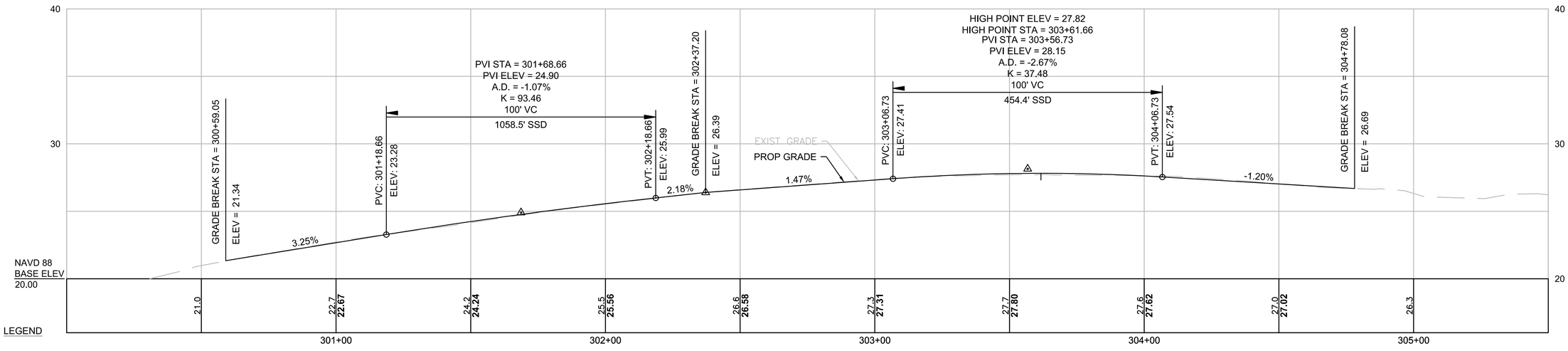

LEGEND

TC=20.64 BC=20.64 0" REVEAL	PROPOSED TOP OF CURB ELEVATION PROPOSED BOTTOM OF CURB ELEVATION CURB REVEAL
EL=20.64 *(20.64)*	PROPOSED ELEVATION AND EXISTING ELEVATION
EL=20.64	PROPOSED ELEVATION ONLY

PLAN AND PROFILE - FAIRMONT STREET

HOR. SCALE IN FEET
20 0 20 40
4 0 4 8
VER. SCALE IN FEET

ISSUED FOR BID

HDR ENGINEERING, INC.
99 HIGH STREET, SUITE 2300
BOSTON, MASSACHUSETTS 02110-2378
(617) 357-7700

COMMONWEALTH OF MASSACHUSETTS
PHILIP FUSCO
CIVIL
No. 45868
REGISTERED PROFESSIONAL ENGINEER

Scale			
Date			
Job No.			
Designed by			
Drawn by			
Checked by	No.	Description	Date
Approved by	REVISIONS		

THE WORKS — CAMBRIDGE DEPARTMENT OF PUBLIC WORKS

Client: CITY OF CAMBRIDGE, MA	Sheet: R-3.21
Project: RIVER STREET INFRASTRUCTURE AND STREETSCAPE PROJECT	Total Sheets: 381
Drawing: **ROADWAY GRADING PLAN AND PROFILE- 21**	File No.

File: C:\PW\WORKING\EAST01\D0786396\8412R_HD(CNS_PROFILE).DWG Plotted: 5/3/2022 7:39:11 AM

SEE SHEET R-3.03

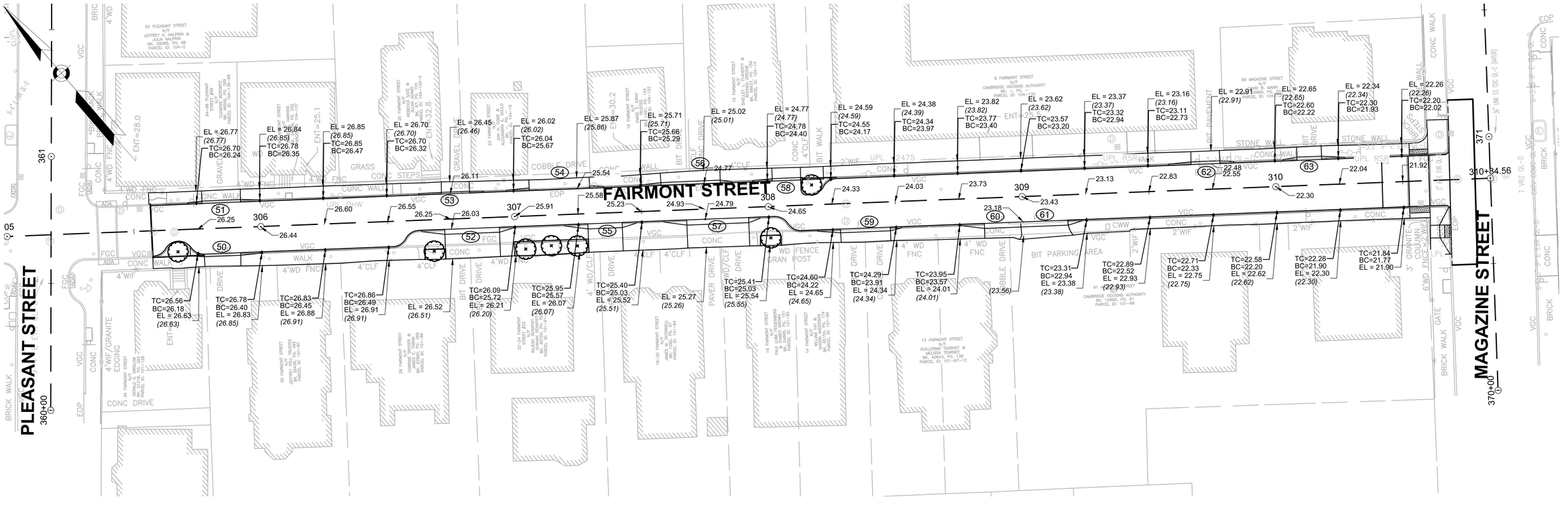

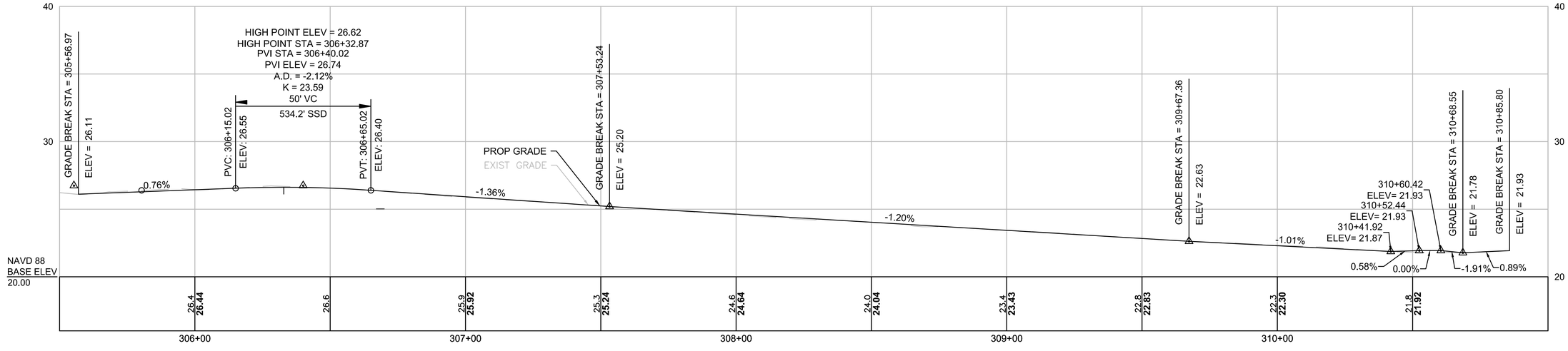

TC=20.64 PROPOSED TOP OF CURB ELEVATION
BC=20.64 PROPOSED BOTTOM OF CURB ELEVATION
0" REVEAL CURB REVEAL

EL=20.64 PROPOSED ELEVATION AND
(20.64) EXISTING ELEVATION

EL=20.64 PROPOSED ELEVATION ONLY

PLAN AND PROFILE - FAIRMONT STREET

HOR. SCALE IN FEET
20 0 20 40
VER. SCALE IN FEET
4 0 4 8

ISSUED FOR BID

HDR ENGINEERING, INC.
99 HIGH STREET, SUITE 2300
BOSTON, MASSACHUSETTS 02110-2378
(617) 357-7700

COMMONWEALTH OF MASSACHUSETTS
PHILIP FUSCO
CIVIL
No. 45868
REGISTERED PROFESSIONAL ENGINEER

Scale			
Date			
Job No.			
Designed by			
Drawn by			
Checked by	No.	Description	Date
Approved by	REVISIONS		

THE WORKS — CAMBRIDGE DEPARTMENT OF PUBLIC WORKS

Client: CITY OF CAMBRIDGE, MA	Sheet: R-3.22
Project: RIVER STREET INFRASTRUCTURE AND STREETSCAPE PROJECT	Total Sheets: 381
Drawing: **ROADWAY GRADING PLAN AND PROFILE- 22**	File No.

File: C:\PWWORKING\EAST01\D0786396\R412R_HD(CNS_PROFILE).DWG Plotted: 5/3/2022 7:47:28 AM

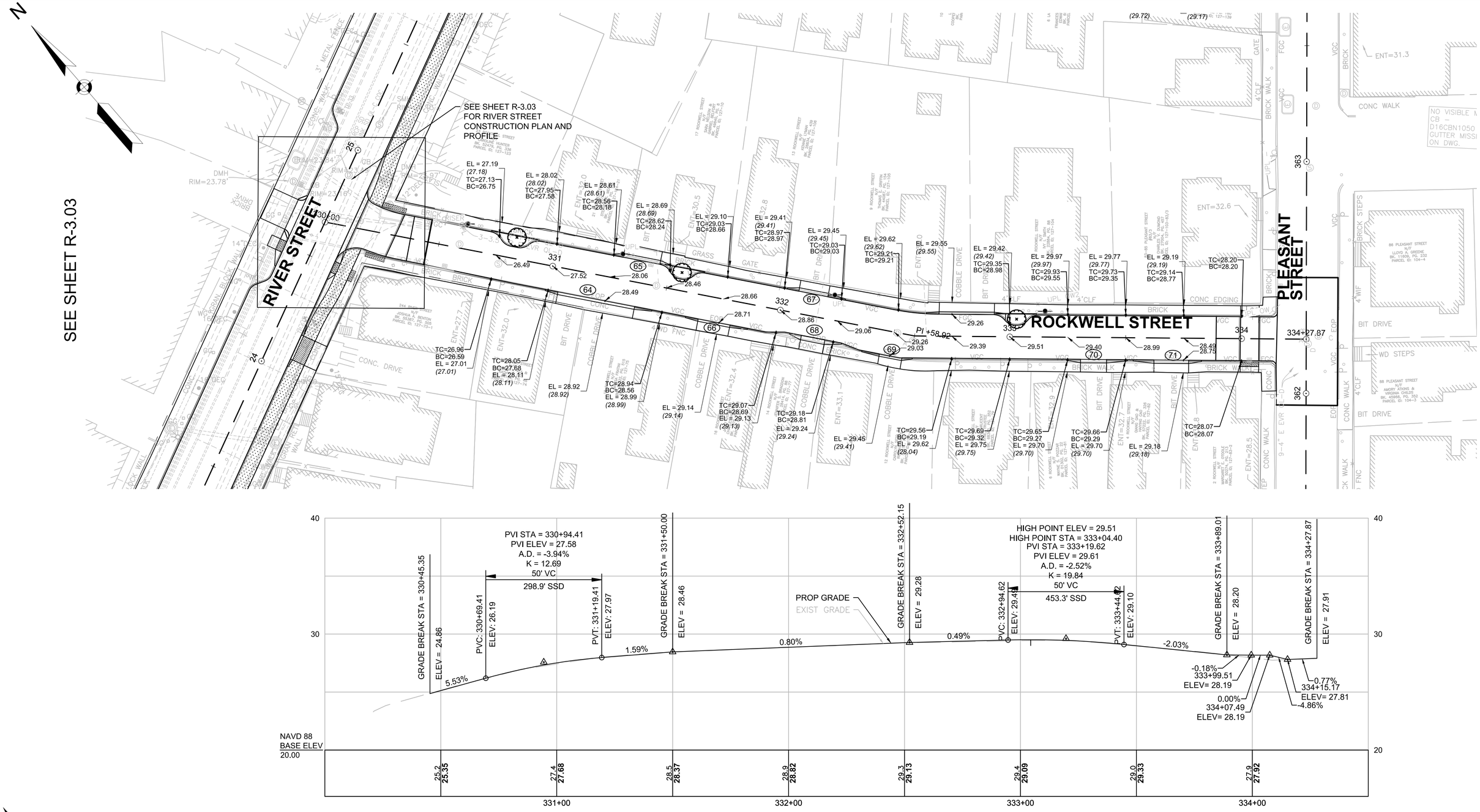
SEE SHEET R-3.03
SEE SHEET R-3.03 FOR RIVER STREET CONSTRUCTION PLAN AND PROFILE
RIVER STREET
ROCKWELL STREET
PLEASANT STREET
EL = 27.19
(27.18)
TC=27.13
BC=26.75
EL = 28.02
(28.02)
TC=27.95
BC=27.58
EL = 28.61
(28.61)
TC=28.56
BC=28.18
EL = 28.69
(28.69)
TC=28.62
BC=28.24
EL = 29.10
TC=29.03
BC=28.66
EL = 29.41
(29.41)
TC=28.97
BC=28.97
EL = 29.45
(29.45)
TC=29.03
BC=29.03
EL = 29.62
(29.62)
TC=29.21
BC=29.21
EL = 29.55
(29.55)
EL = 29.42
(29.42)
TC=29.35
BC=28.98
EL = 29.97
(29.97)
TC=29.93
BC=29.55
EL = 29.77
(29.77)
TC=29.73
BC=29.35
EL = 29.19
(29.19)
TC=29.14
BC=28.77
TC=28.20
BC=28.20
TC=26.96
BC=26.59
EL = 27.01
(27.01)
TC=28.05
BC=27.68
EL = 28.11
(28.11)
EL = 28.92
(28.92)
TC=28.94
BC=28.56
EL = 28.99
(28.99)
EL = 29.14
(29.14)
TC=29.07
BC=28.69
EL = 29.13
(29.13)
TC=29.18
BC=28.81
EL = 29.24
(29.24)
EL = 29.46
(29.41)
TC=29.56
BC=29.19
EL = 29.62
(28.04)
TC=29.69
BC=29.32
EL = 29.75
(29.75)
TC=29.65
BC=29.27
EL = 29.70
(29.70)
TC=29.66
BC=29.29
EL = 29.70
(29.70)
EL = 29.18
(29.18)
TC=28.07
BC=28.07
26.49
27.52
28.06
28.46
28.49
28.66
28.71
28.86
29.06
29.26
29.03
29.39
29.51
29.40
28.99
28.49
28.75
331
332
333
334
65
66
67
68
69
70
71
PI +58.92
334+27.87
363
362
ENT=31.3
ENT=32.6
ENT=28.5
CONC WALK
BRICK STEPS
WD STEPS
BIT DRIVE
COBBLE DRIVE
CONC. DRIVE
BRICK WALK
CONC EDGING
4' CLF
4' WIF
GRASS
GATE
86 PLEASANT STREET N/F LLOYD A. GREENE BK. 11809, PG. 332 PARCEL ID: 104-4
88 PLEASANT STREET N/F AMORY ATKINS & VIRGINIA CHILDS BK. 45068, PG. 352 PARCEL ID: 104-3
NO VISIBLE M
GB –
D16CBN1050
GUTTER MISSI
ON DWG.
DMH RIM=23.78
DMH RIM=23.97
CB RIM=23.64
CB RIM=23.61
CB RIM=23.63
CB RIM=23.67
CB RIM=23.69
CB RIM=23.70
CB RIM=23.71
CB RIM=23.72
CB RIM=23.73
CB RIM=23.74
CB RIM=23.75
CB RIM=23.76
CB RIM=23.77
CB RIM=23.78
CB RIM=23.79
CB RIM=23.80
CB RIM=23.81
CB RIM=23.82
CB RIM=23.83
CB RIM=23.84
CB RIM=23.85
CB RIM=23.86
CB RIM=23.87
CB RIM=23.88
CB

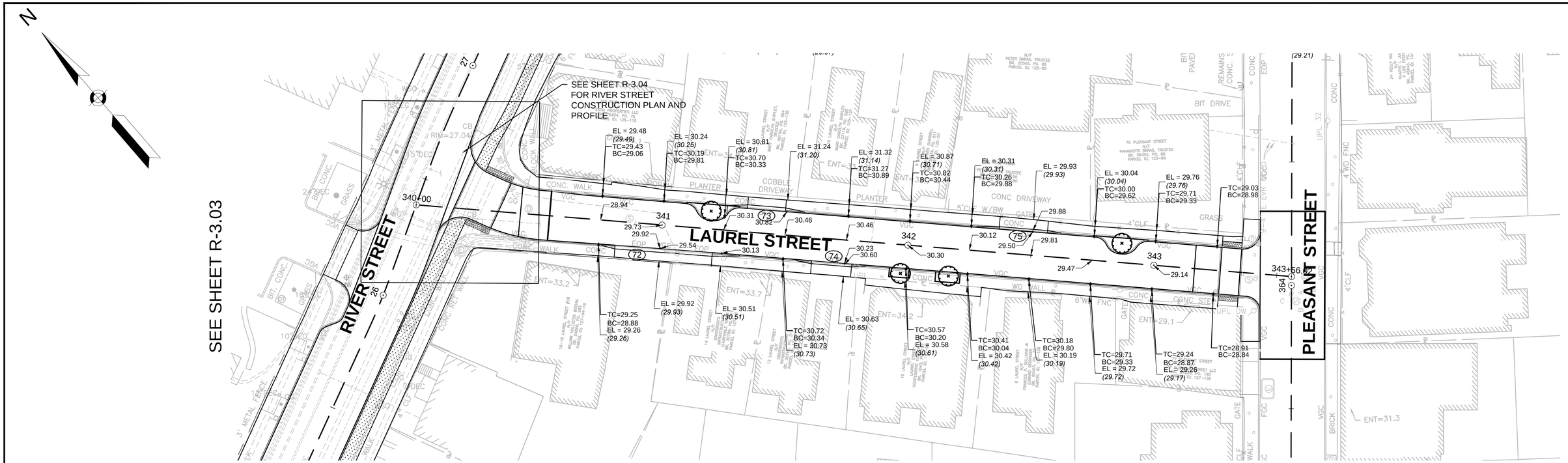

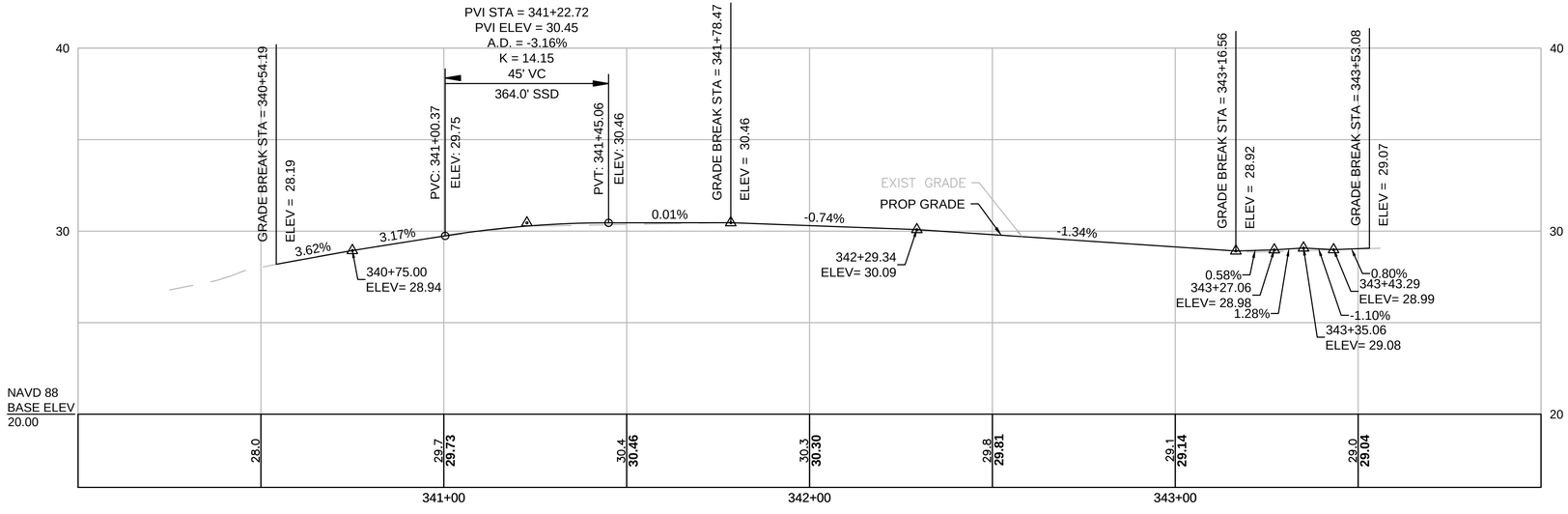

TC=20.64 PROPOSED TOP OF CURB ELEVATION
BC=20.64 PROPOSED BOTTOM OF CURB ELEVATION
0" REVEAL CURB REVEAL

EL=20.64 PROPOSED ELEVATION AND
(20.64) EXISTING ELEVATION

EL=20.64 PROPOSED ELEVATION ONLY

PLAN AND PROFILE - LAUREL STREET

HOR. SCALE IN FEET
20 0 20 40
4 0 4 8
VER. SCALE IN FEET

ISSUED FOR BID

HDR ENGINEERING, INC.
99 HIGH STREET, SUITE 2300
BOSTON, MASSACHUSETTS 02110–2378
(617) 357–7700

COMMONWEALTH OF MASSACHUSETTS
PHILIP FUSCO
CIVIL
No. 45868
REGISTERED PROFESSIONAL ENGINEER

Scale			
Date			
Job No.			
Designed by			
Drawn by			
Checked by	No.	Description	Date
Approved by	REVISIONS		

THE WORKS — CAMBRIDGE DEPARTMENT OF PUBLIC WORKS

Client: CITY OF CAMBRIDGE, MA	Sheet: R-3.24
Project: RIVER STREET INFRASTRUCTURE AND STREETSCAPE PROJECT	Total Sheets: 381
Drawing: **ROADWAY GRADING PLAN AND PROFILE- 24**	File No.

File: C:\PW\WORKING\EAST01\D0786396\8412R_HD\CNS_PROFILE).DWG Plotted: 4/19/2022 1:54:00 PM

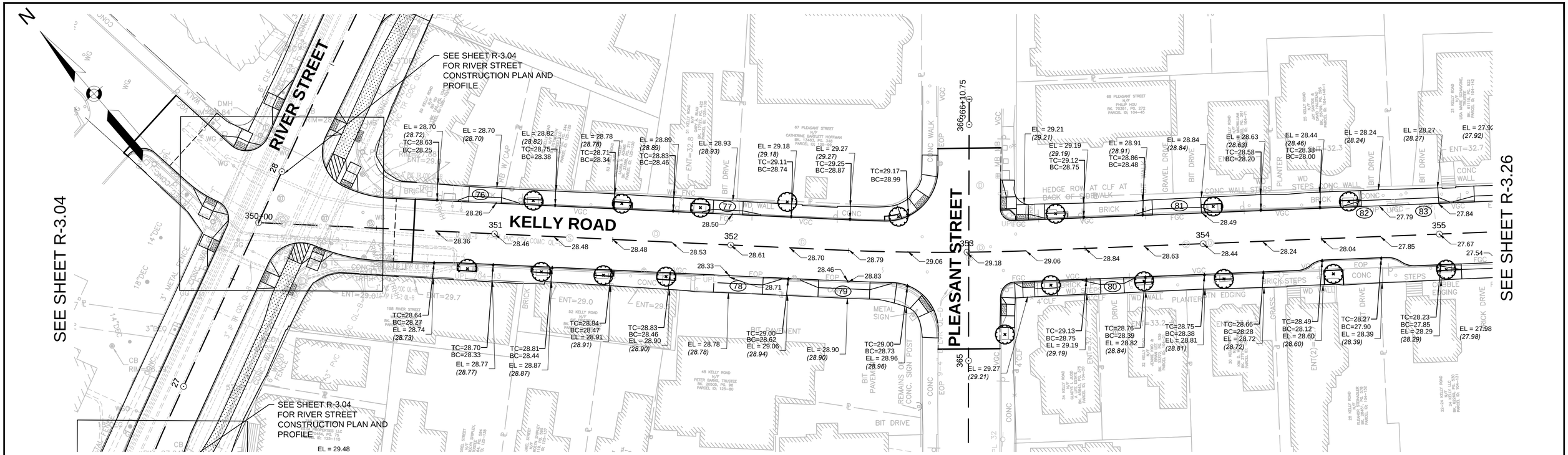

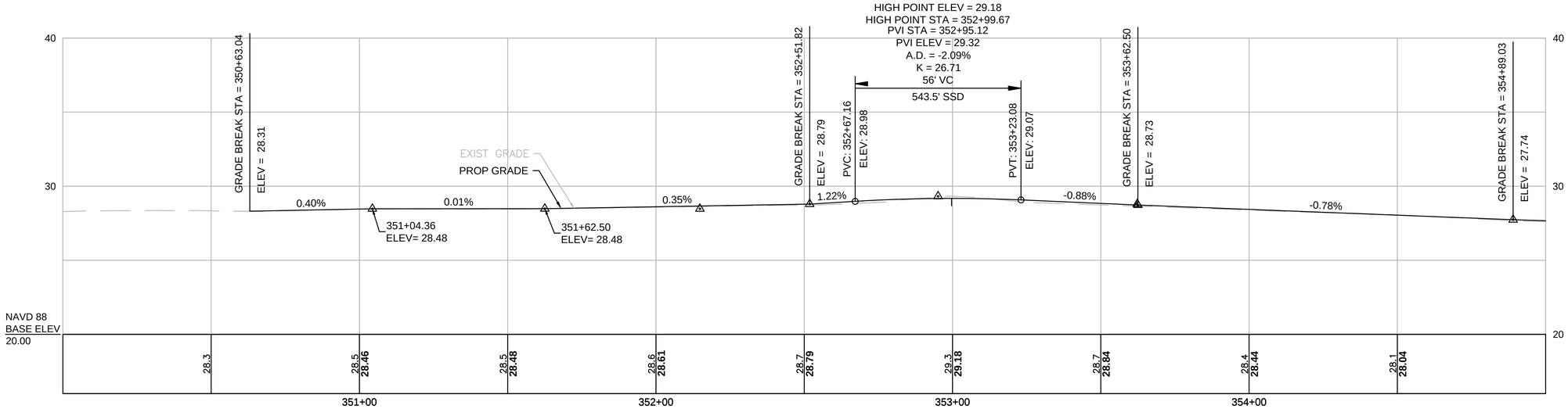

PLAN AND PROFILE - KELLY ROAD

HOR. SCALE IN FEET
20 0 20 40
4 0 4 8
VER. SCALE IN FEET

ISSUED FOR BID

HDR ENGINEERING, INC.
99 HIGH STREET, SUITE 2300
BOSTON, MASSACHUSETTS 02110-2378
(617) 357-7700

COMMONWEALTH OF MASSACHUSETTS
PHILIP FUSCO CIVIL No. 45868
REGISTERED PROFESSIONAL ENGINEER

Scale			
Date			
Job No.			
Designed by			
Drawn by			
Checked by	No.	Description	Date
Approved by	REVISIONS		

THE WORKS — CAMBRIDGE DEPARTMENT OF PUBLIC

Client	CITY OF CAMBRIDGE, MA	Sheet	R-3.25
Project	RIVER STREET INFRASTRUCTURE AND STREETSCAPE PROJECT	Total Sheets	381
Drawing	**ROADWAY GRADING PLAN AND PROFILE- 25**	File No.	

File: C:\PWWORKING\EAST\D0786396\8412R_HD(CNS_PROFILE).DWG Plotted: 4/19/2022 1:54:10 PM

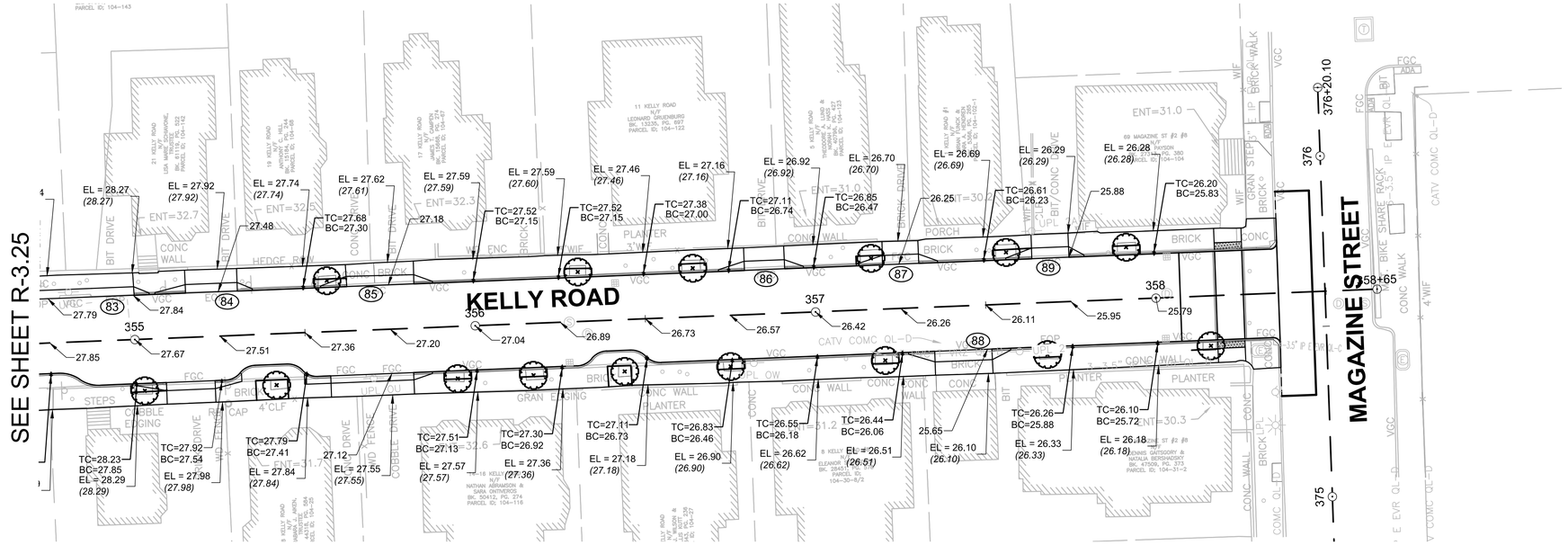

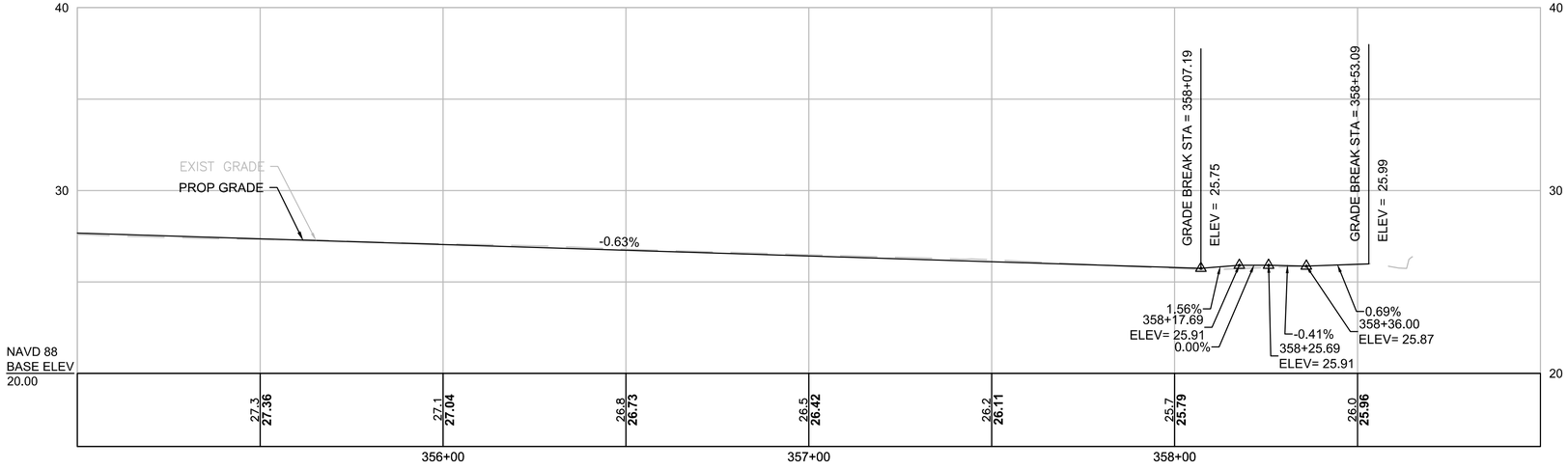

TC=20.64 PROPOSED TOP OF CURB ELEVATION
BC=20.64 PROPOSED BOTTOM OF CURB ELEVATION
0" REVEAL CURB REVEAL

EL=20.64 PROPOSED ELEVATION AND
(20.64) EXISTING ELEVATION

EL=20.64 PROPOSED ELEVATION ONLY

PLAN AND PROFILE - KELLY ROAD

HOR. SCALE IN FEET
20 0 20 40
VER. SCALE IN FEET
4 0 4 8

ISSUED FOR BID

HDR ENGINEERING, INC.
99 HIGH STREET, SUITE 2300
BOSTON, MASSACHUSETTS 02110-2378
(617) 357-7700

COMMONWEALTH OF MASSACHUSETTS
PHILIP FUSCO
CIVIL
No. 45868
REGISTERED PROFESSIONAL ENGINEER

Scale			
Date			
Job No.			
Designed by			
Drawn by			
Checked by	No.	Description	Date
Approved by	REVISIONS		

THE WORKS — CAMBRIDGE DEPARTMENT OF PUBLIC WORKS

Client: CITY OF CAMBRIDGE, MA
Project: RIVER STREET INFRASTRUCTURE AND STREETSCAPE PROJECT
Drawing: **ROADWAY GRADING PLAN AND PROFILE- 26**
Sheet: R-3.26
Total Sheets: 381
File No.:

File: C:\PWWORKING\EAST01\D0786396\8412R_HD(CNS_PROFILE).DWG Plotted: 5/3/2022 7:42:16 AM

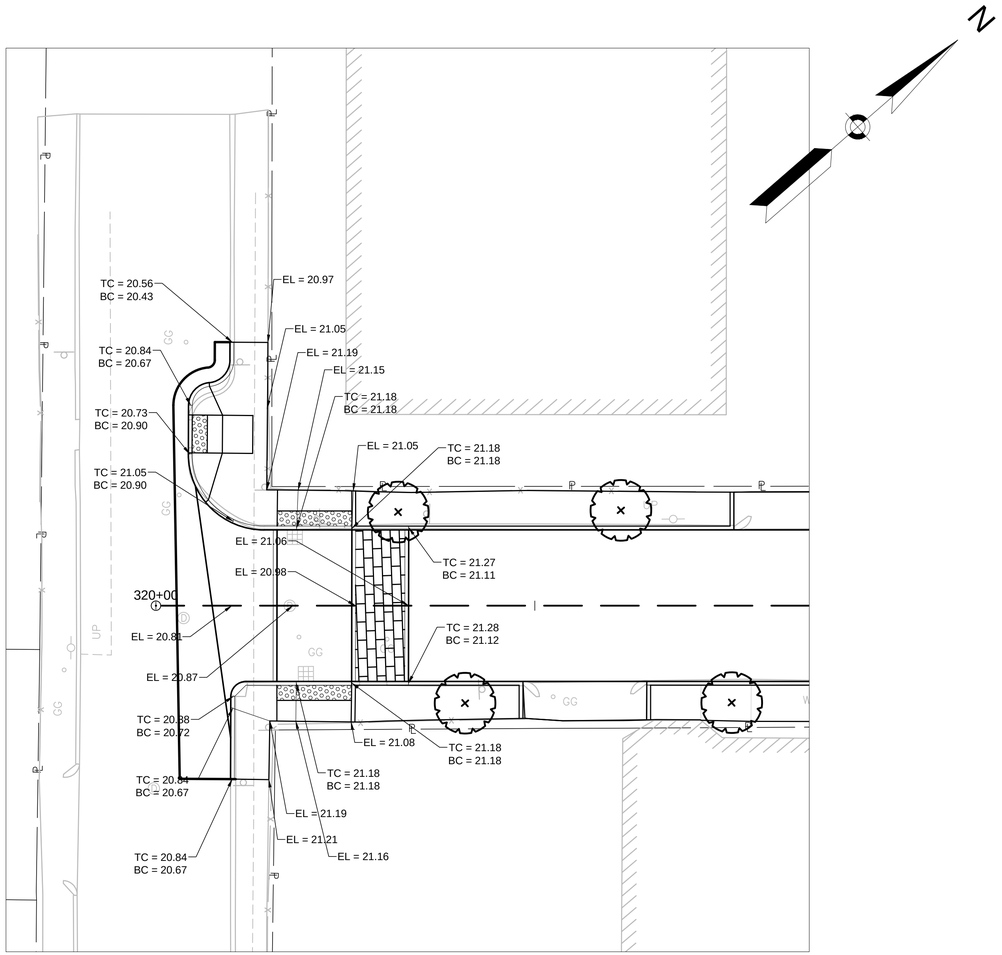

FAIRMONT AVENUE AT ALLSTON STREET INTERSECTION

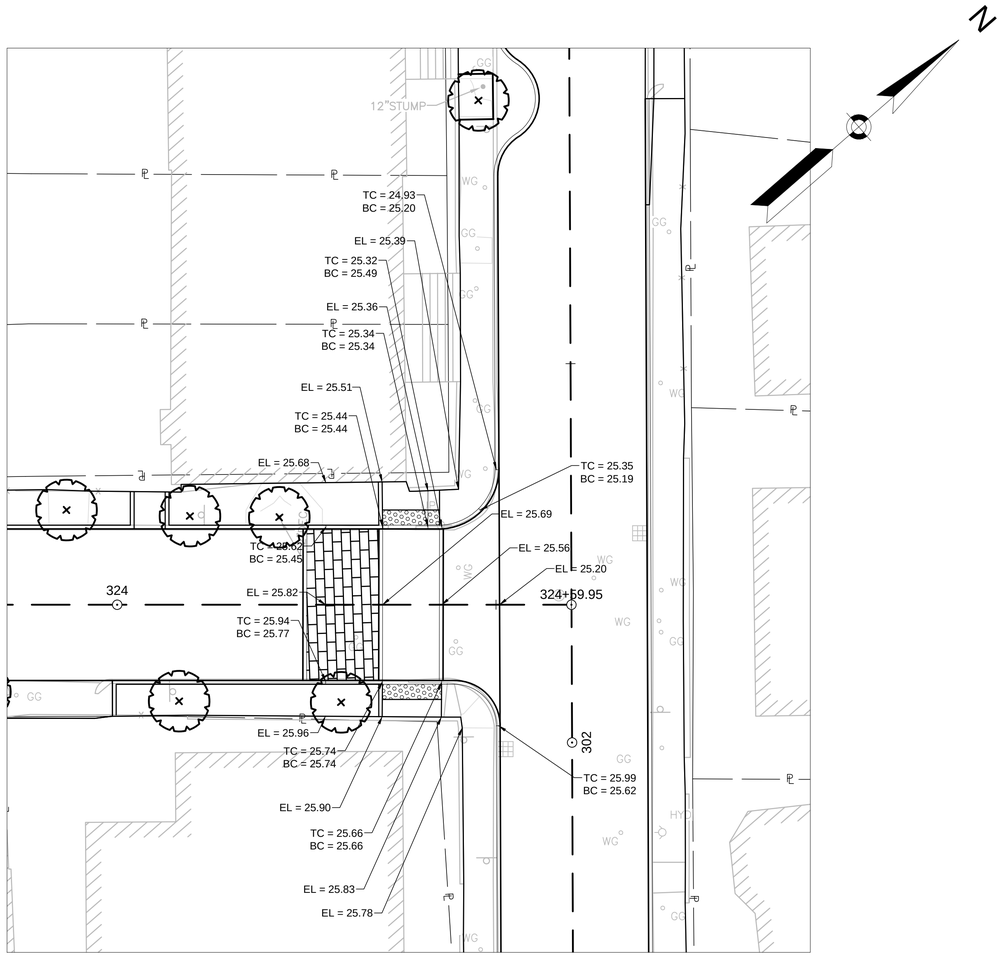

FARIMONT AVENUE AT FAIRMONT STREET INTERSECTION

LEGEND

TC=20.64 BC=20.64 0" REVEAL	PROPOSED TOP OF CURB ELEVATION PROPOSED BOTTOM OF CURB ELEVATION CURB REVEAL
EL=20.64 (20.64)	PROPOSED ELEVATION AND EXISTING ELEVATION
EL=20.64	PROPOSED ELEVATION ONLY

0 10 25 50

SCALE: 1" = 10'

ISSUED FOR BID

HDR ENGINEERING, INC.
99 HIGH STREET, SUITE 2300
BOSTON, MASSACHUSETTS 02110-2378
(617) 357-7700

COMMONWEALTH OF MASSACHUSETTS
PHILIP FUSCO
CIVIL
No. 45868
REGISTERED PROFESSIONAL ENGINEER

Scale			
Date			
Job No.			
Designed by			
Drawn by			
Checked by	No.	Description	Date
Approved by	REVISIONS		

THE WORKS — CAMBRIDGE DEPARTMENT OF PUBLIC

Client	CITY OF CAMBRIDGE, MA	Sheet	R-4.12
Project	RIVER STREET INFRASTRUCTURE AND STREETSCAPE PROJECT	Total Sheets	381
Drawing	**ROADWAY INTERSECTION GRADING PLAN - 12**	File No.	

File: C:\PWWORKING\EAST01\D07863961\8412R_HD_(INTERSECTION GRADING).DWG Plotted: 4/19/2022 1:54:47 PM

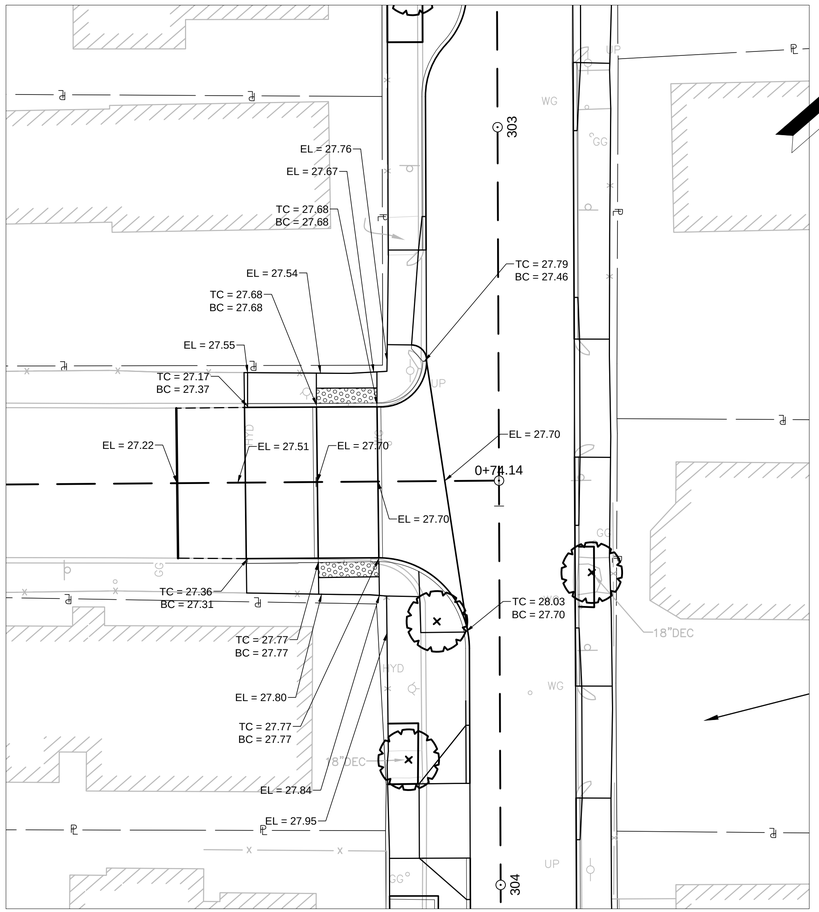

FAIRMONT STREET AT ANDREW STREET INTERSECTION

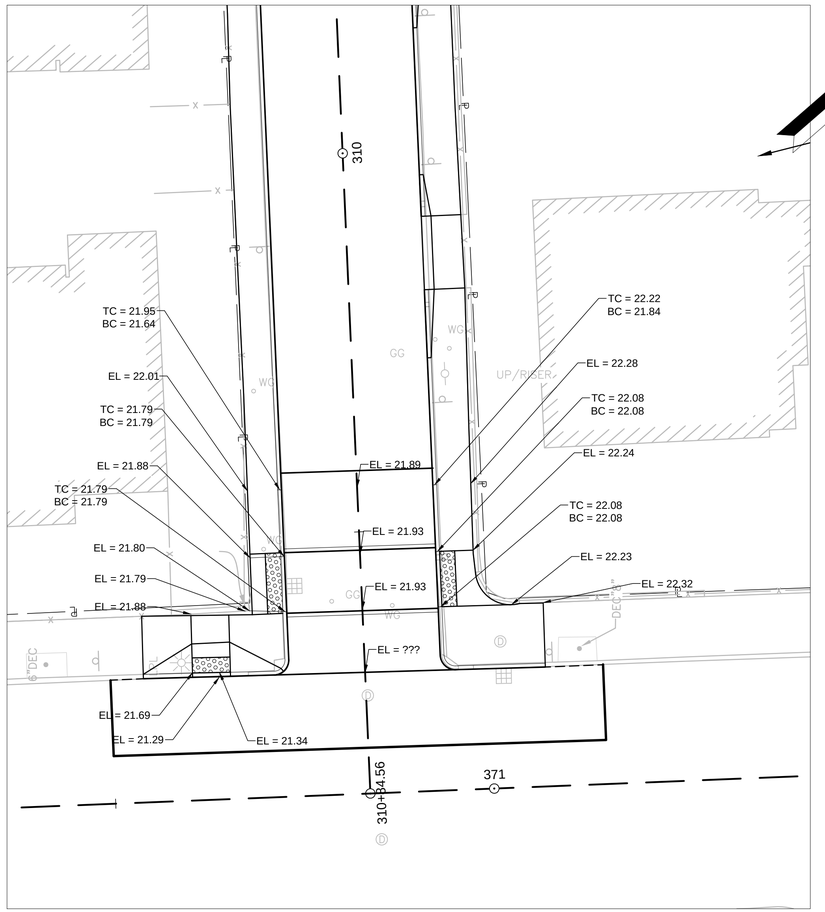

FAIRMONT STREET AT MAGAZINE STREET INTERSECTION

LEGEND

TC=20.64 BC=20.64 0" REVEAL	PROPOSED TOP OF CURB ELEVATION PROPOSED BOTTOM OF CURB ELEVATION CURB REVEAL
EL=20.64 (20.64)	PROPOSED ELEVATION AND EXISTING ELEVATION
EL=20.64	PROPOSED ELEVATION ONLY

0 10 25 50

SCALE: 1" = 10'

ISSUED FOR BID

HDR ENGINEERING, INC.
99 HIGH STREET, SUITE 2300
BOSTON, MASSACHUSETTS 02110-2378
(617) 357-7700

COMMONWEALTH OF MASSACHUSETTS
PHILIP FUSCO
CIVIL
No. 45868
REGISTERED PROFESSIONAL ENGINEER

Scale			
Date			
Job No.			
Designed by			
Drawn by			
Checked by	No.	Description	Date
Approved by	REVISIONS		

THE WORKS — CAMBRIDGE DEPARTMENT OF PUBLIC

Client	CITY OF CAMBRIDGE, MA	Sheet	R-4.13
Project	RIVER STREET INFRASTRUCTURE AND STREETSCAPE PROJECT	Total Sheets	381
Drawing	**ROADWAY INTERSECTION GRADING PLAN - 13**	File No.	

File: C:\PWWORKING\EAST01\D0786396\8412R_HD_(INTERSECTION GRADING).DWG Plotted: 4/19/2022 1:54:52 PM

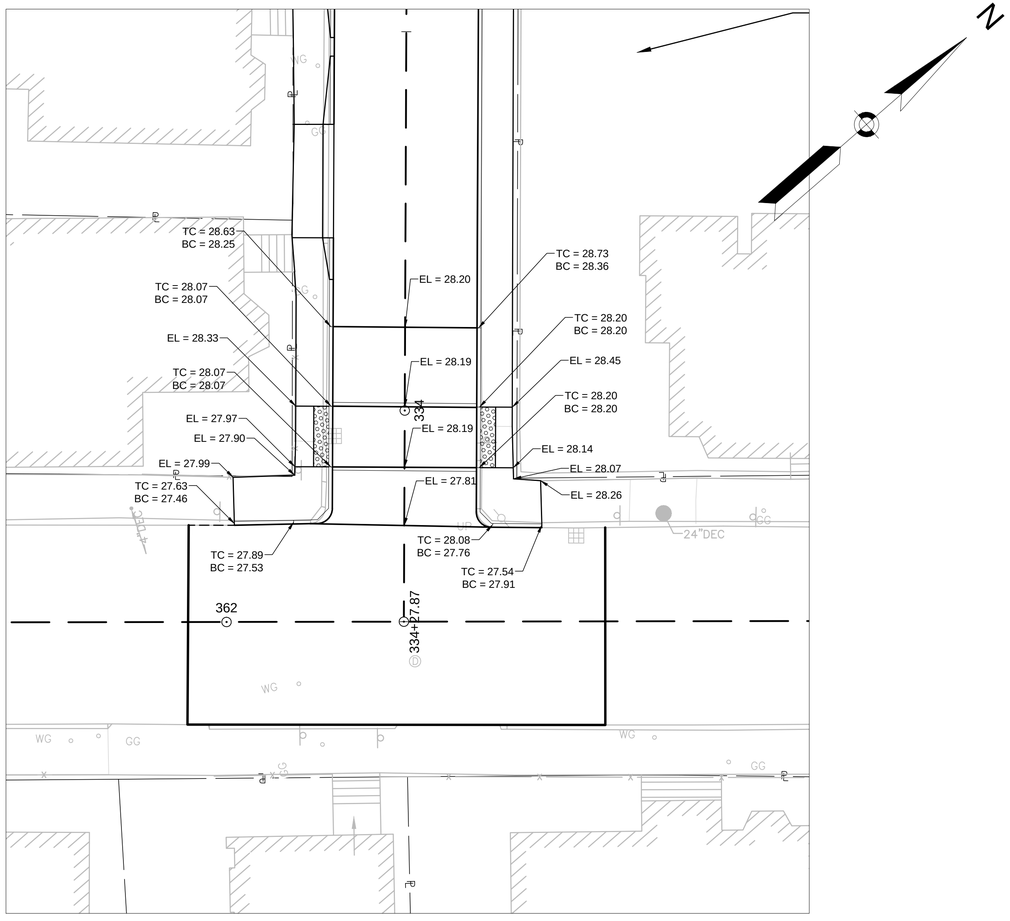

ROCKWELL STREET AT PLEASANT STREET
INTERSECTION

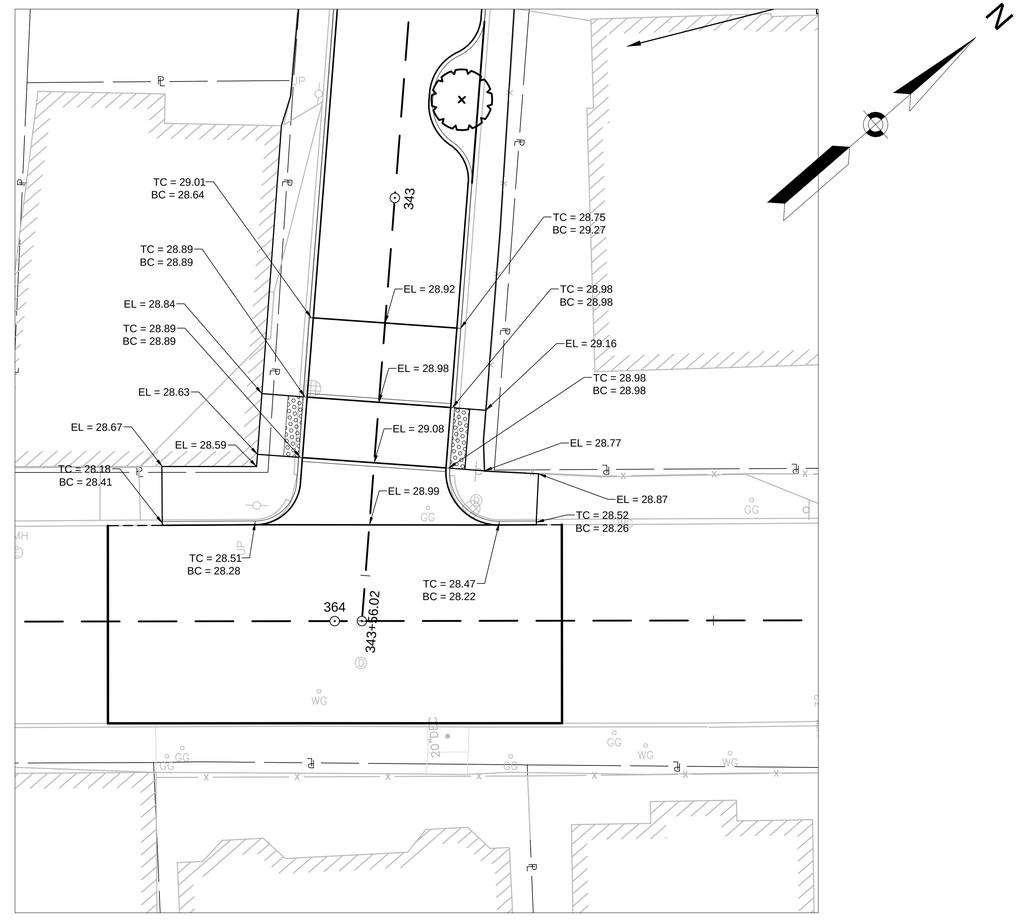

LAUREL STREET AT MAGAZINE STREET
INTERSECTION

LEGEND

TC=20.64 BC=20.64 0" REVEAL	PROPOSED TOP OF CURB ELEVATION PROPOSED BOTTOM OF CURB ELEVATION CURB REVEAL
EL=20.64 (20.64)	PROPOSED ELEVATION AND EXISTING ELEVATION
EL=20.64	PROPOSED ELEVATION ONLY

0 10 25 50

SCALE: 1" = 10'

ISSUED FOR BID

HDR ENGINEERING, INC.
99 HIGH STREET, SUITE 2300
BOSTON, MASSACHUSETTS 02110-2378
(617) 357-7700

COMMONWEALTH OF MASSACHUSETTS
PHILIP FUSCO
CIVIL
No. 45868
REGISTERED PROFESSIONAL ENGINEER

Scale			
Date			
Job No.			
Designed by			
Drawn by			
Checked by	No.	Description	Date
Approved by	REVISIONS		

THE WORKS
CAMBRIDGE DEPARTMENT OF PUBLIC

Client	CITY OF CAMBRIDGE, MA	Sheet R-4.14
Project	RIVER STREET INFRASTRUCTURE AND STREETSCAPE PROJECT	Total Sheets 381
Drawing	**ROADWAY INTERSECTION GRADING PLAN - 14**	File No.

File: C:\PWWORKING\EAST01\D07863968412R_HD_(INTERSECTION GRADING).DWG Plotted: 4/19/2022 1:54:57 PM

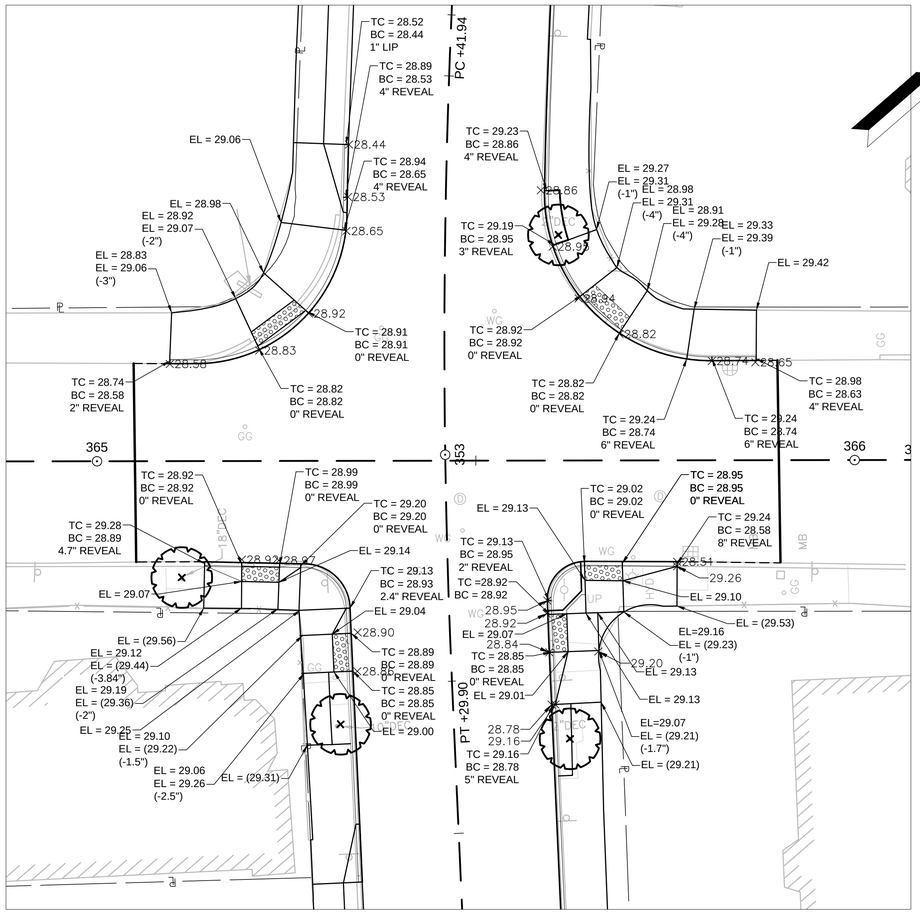

KELLY ROAD AT PLEASANT STREET
INTERSECTION

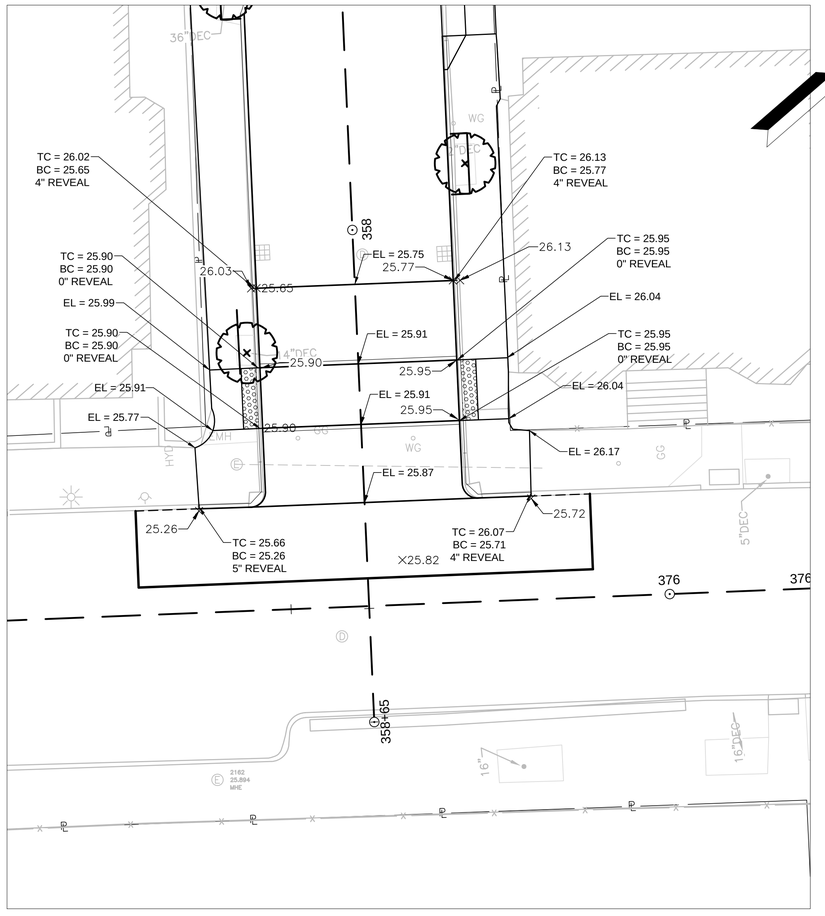

KELLY ROAD AT MAGAZINE STREET
INTERSECTION

LEGEND

TC=20.64 BC=20.64 0" REVEAL	PROPOSED TOP OF CURB ELEVATION PROPOSED BOTTOM OF CURB ELEVATION CURB REVEAL
EL=20.64 (20.64)	PROPOSED ELEVATION AND EXISTING ELEVATION
EL=20.64	PROPOSED ELEVATION ONLY

0 10 25 50

SCALE: 1" = 10'

ISSUED FOR BID

HDR ENGINEERING, INC.
99 HIGH STREET, SUITE 2300
BOSTON, MASSACHUSETTS 02110-2378
(617) 357-7700

COMMONWEALTH OF MASSACHUSETTS
PHILIP FUSCO
CIVIL
No. 45868
REGISTERED PROFESSIONAL ENGINEER

Scale			
Date			
Job No.			
Designed by			
Drawn by			
Checked by	No.	Description	Date
Approved by	REVISIONS		

THE WORKS — CAMBRIDGE DEPARTMENT OF PUBLIC WORKS

Client	CITY OF CAMBRIDGE, MA	Sheet	R-4.15
Project	RIVER STREET INFRASTRUCTURE AND STREETSCAPE PROJECT	Total Sheets	381
Drawing	**ROADWAY INTERSECTION GRADING PLAN - 15**	File No.	

File: C:\PWWORKING\EAST01\D07863968412R_HD_(INTERSECTION GRADING).DWG Plotted: 4/19/2022 1:55:02 PM

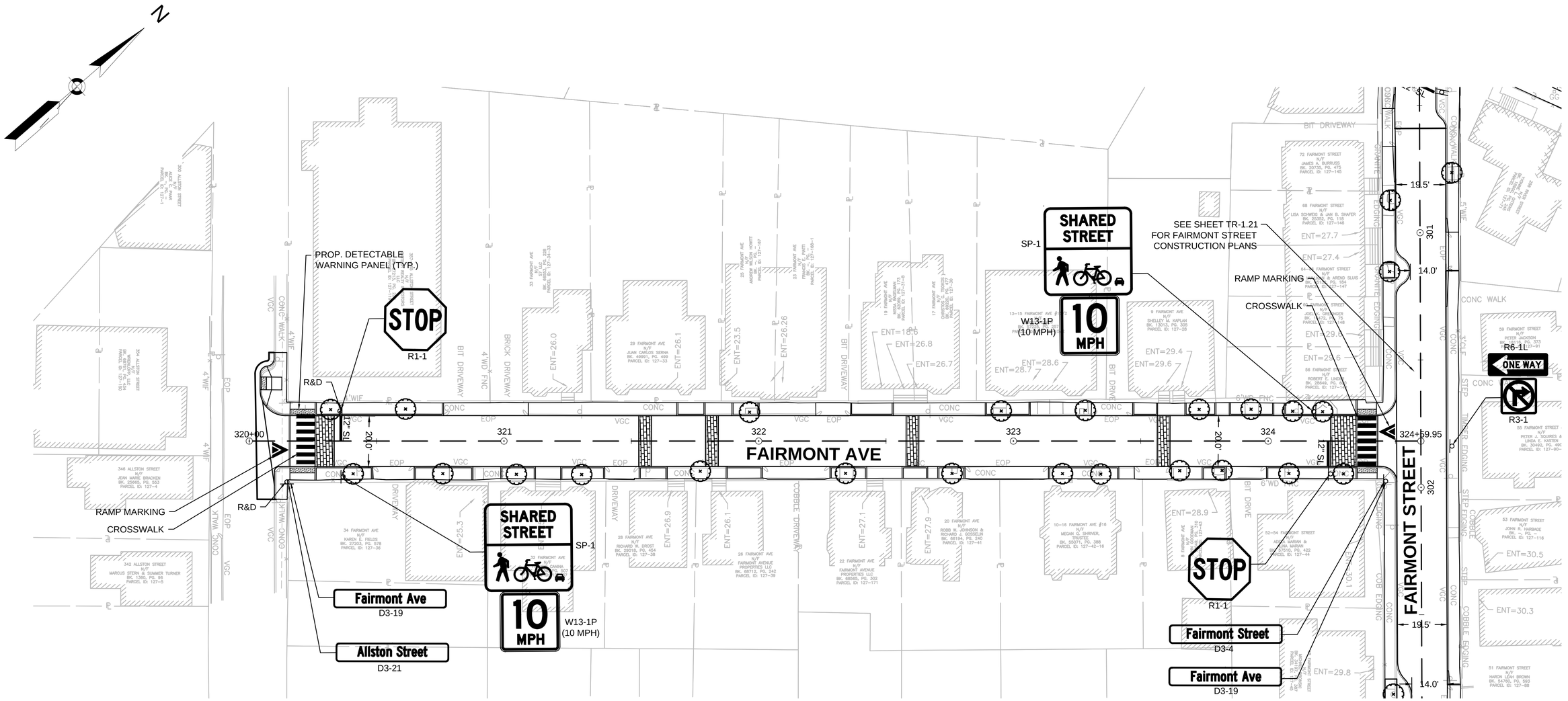

NOTES:

1. ALL EXISTING SIGNS AND POSTS SHALL BE REMOVED UNLESS OTHERWISE NOTED. ALL REINSTALLED EXISTING SIGNS AND PROPOSED SIGNS SHALL BE LOCATED A LATERAL CLEARANCE OF 1' (MIN) FROM BACK OF CURB.
2. THE CONTRACTOR SHALL COORDINATE THE FINAL PAVEMENT MARKING CONFIGURATION WITH THE CITY PRIOR TO PLACING PAVEMENT MARKINGS.
3. CITY CURB USE REGULATION SIGNS TO BE FURTHER DEVELOPED IN COORDINATION WITH TPT AND SHOWN ON FUTURE DESIGN SUBMISSIONS.

PLAN

0 20 50 100

SCALE: 1" = 20'

ISSUED FOR BID

HDR ENGINEERING, INC.
99 HIGH STREET, SUITE 2300
BOSTON, MASSACHUSETTS 02110–2378
(617) 357–7700

COMMONWEALTH OF MASSACHUSETTS
PHILIP FUSCO
CIVIL
No. 45868
REGISTERED PROFESSIONAL ENGINEER

Scale			
Date			
Job No.			
Designed by			
Drawn by			
Checked by	No.	Description	Date
Approved by	REVISIONS		

CAMBRIDGE DEPARTMENT OF PUBLIC WORKS

Client: CITY OF CAMBRIDGE, MA

Project: RIVER STREET
INFRASTRUCTURE AND STREETSCAPE PROJECT

Drawing: **TRAFFIC SIGNS AND PAVEMENT MARKINGS PLAN - 20**

Sheet: TR-1.20

Total Sheets: 381

File No.

File: C:\PW\WORKING\EAST\011D0786396\8412R_TR(CNS_PVMT MRKS PLANS).DWG Plotted: 4/19/2022 1:55:25 PM

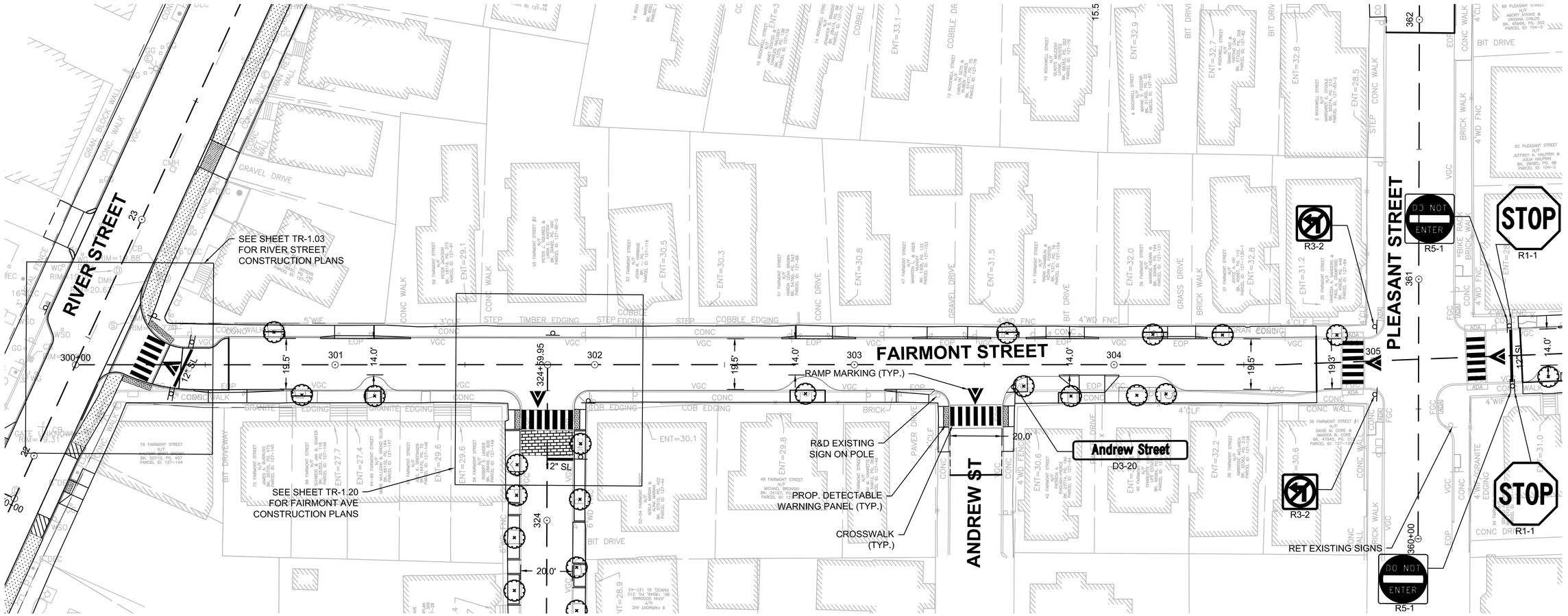

NOTES:

1. ALL EXISTING SIGNS AND POSTS SHALL BE REMOVED UNLESS OTHERWISE NOTED. ALL REINSTALLED EXISTING SIGNS AND PROPOSED SIGNS SHALL BE LOCATED A LATERAL CLEARANCE OF 1' (MIN) FROM BACK OF CURB.
2. THE CONTRACTOR SHALL COORDINATE THE FINAL PAVEMENT MARKING CONFIGURATION WITH THE CITY PRIOR TO PLACING PAVEMENT MARKINGS.
3. CITY CURB USE REGULATION SIGNS TO BE FURTHER DEVELOPED IN COORDINATION WITH TPT AND SHOWN ON FUTURE DESIGN SUBMISSIONS.

PLAN

0 20 50 100

SCALE: 1" = 20'

ISSUED FOR BID

HDR ENGINEERING, INC.
99 HIGH STREET, SUITE 2300
BOSTON, MASSACHUSETTS 02110-2378
(617) 357-7700

COMMONWEALTH OF MASSACHUSETTS
PHILIP FUSCO
CIVIL
No. 45868
REGISTERED PROFESSIONAL ENGINEER

Scale			
Date			
Job No.			
Designed by			
Drawn by			
Checked by	No.	Description	Date
Approved by	REVISIONS		

THE WORKS — CAMBRIDGE DEPARTMENT OF PUBLIC

Client: CITY OF CAMBRIDGE, MA

Project: RIVER STREET
INFRASTRUCTURE AND STREETSCAPE PROJECT

Drawing: **TRAFFIC SIGNS AND PAVEMENT MARKINGS PLAN - 21**

Sheet: TR-1.21

Total Sheets: 381

File No.:

9:25:22 AM

File: C:\PW\WORKING\EAST01\D0786396\I8412R_TR\CNS_PVMT MRKS PLANS).DWG Plotted: 5/3/2022

SEE SHEET TR-1.21

PLEASANT STREET

FAIRMONT STREET

MAGAZINE STREET

RET EXISTING SIGNS

SEE SHEET TR-1.21 FOR PLEASANT ST CONSTRUCTION PLANS

RAMP MARKING (TYP.)

PROP. DETECTABLE WARNING PANEL (TYP.)

CROSSWALK (TYP.)

RET EXISTING SIGNS ON POLE

NOTES:

1. ALL EXISTING SIGNS AND POSTS SHALL BE REMOVED UNLESS OTHERWISE NOTED. ALL REINSTALLED EXISTING SIGNS AND PROPOSED SIGNS SHALL BE LOCATED A LATERAL CLEARANCE OF 1' (MIN) FROM BACK OF CURB.
2. THE CONTRACTOR SHALL COORDINATE THE FINAL PAVEMENT MARKING CONFIGURATION WITH THE CITY PRIOR TO PLACING PAVEMENT MARKINGS.
3. CITY CURB USE REGULATION SIGNS TO BE FURTHER DEVELOPED IN COORDINATION WITH TPT AND SHOWN ON FUTURE DESIGN SUBMISSIONS.

PLAN

0 20 50 100

SCALE: 1" = 20'

ISSUED FOR BID

HDR ENGINEERING, INC.
99 HIGH STREET, SUITE 2300
BOSTON, MASSACHUSETTS 02110-2378
(617) 357-7700

COMMONWEALTH OF MASSACHUSETTS
PHILIP FUSCO
CIVIL
No. 45868
REGISTERED PROFESSIONAL ENGINEER

Scale			
Date			
Job No.			
Designed by			
Drawn by			
Checked by	No.	Description	Date
Approved by	REVISIONS		

THE WORKS — CAMBRIDGE DEPARTMENT OF PUBLIC WORKS

Client: CITY OF CAMBRIDGE, MA

Project: RIVER STREET INFRASTRUCTURE AND STREETSCAPE PROJECT

Drawing: **TRAFFIC SIGNS AND PAVEMENT MARKINGS PLAN - 22**

Sheet: TR-1.22

Total Sheets: 381

File No.

File: C:\PWWORKING\EAST01\D0786396\8412R_TR(CNS_PVMT MRKS PLANS).DWG Plotted: 4/19/2022 1:55:37 PM

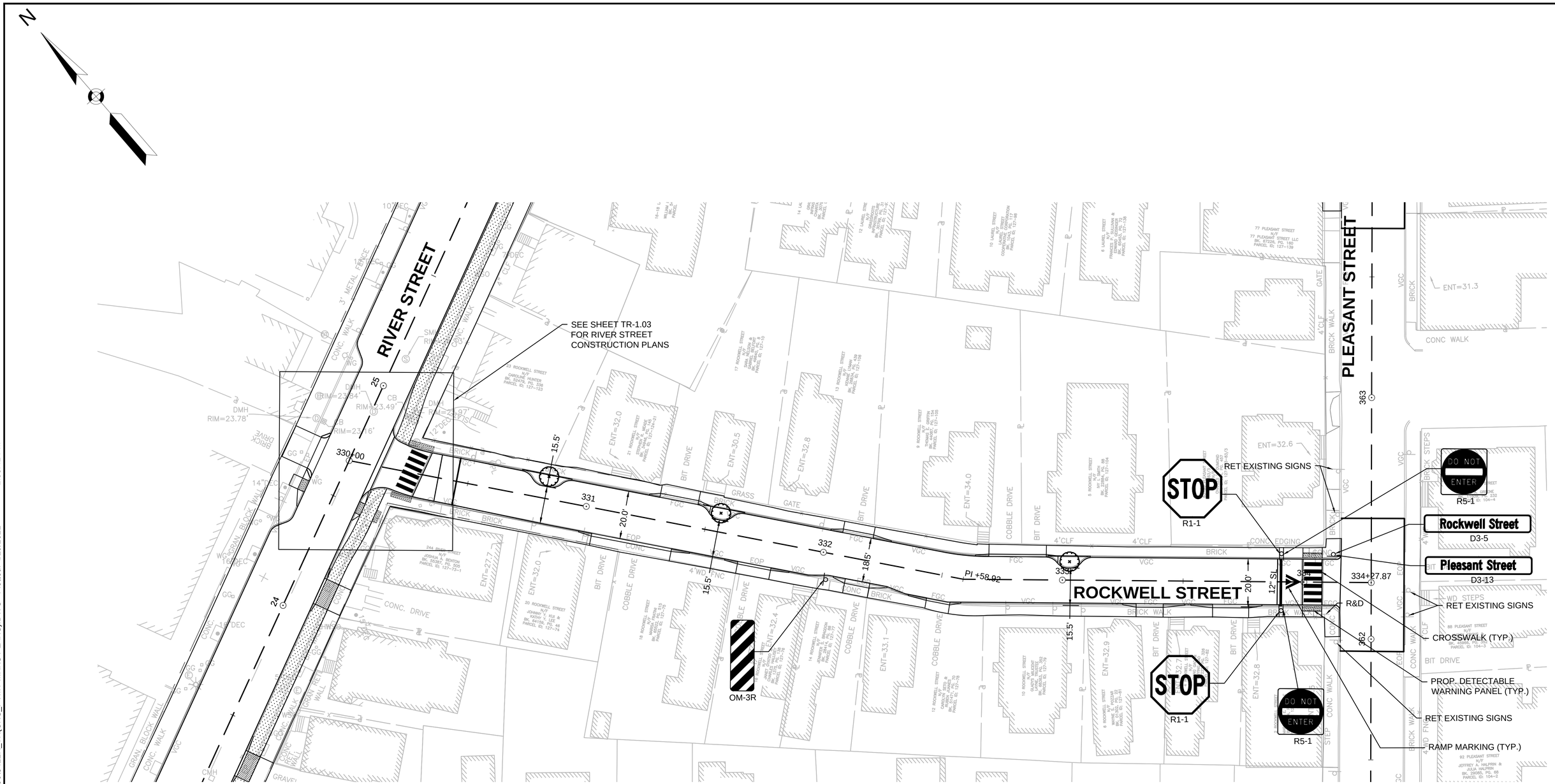

NOTES:

1. ALL EXISTING SIGNS AND POSTS SHALL BE REMOVED UNLESS OTHERWISE NOTED. ALL REINSTALLED EXISTING SIGNS AND PROPOSED SIGNS SHALL BE LOCATED A LATERAL CLEARANCE OF 1' (MIN) FROM BACK OF CURB.
2. THE CONTRACTOR SHALL COORDINATE THE FINAL PAVEMENT MARKING CONFIGURATION WITH THE CITY PRIOR TO PLACING PAVEMENT MARKINGS.
3. CITY CURB USE REGULATION SIGNS TO BE FURTHER DEVELOPED IN COORDINATION WITH TPT AND SHOWN ON FUTURE DESIGN SUBMISSIONS.

PLAN

0 20 50 100

SCALE: 1" = 20'

ISSUED FOR BID

HDR ENGINEERING, INC.
99 HIGH STREET, SUITE 2300
BOSTON, MASSACHUSETTS 02110–2378
(617) 357–7700

PHILIP FUSCO CIVIL No. 45868 REGISTERED PROFESSIONAL ENGINEER COMMONWEALTH OF MASSACHUSETTS

Scale			
Date			
Job No.			
Designed by			
Drawn by			
Checked by	No.	Description	Date
Approved by	REVISIONS		

THE WORKS — CAMBRIDGE DEPARTMENT OF PUBLIC

Client: CITY OF CAMBRIDGE, MA

Project: RIVER STREET
INFRASTRUCTURE AND STREETSCAPE PROJECT

Drawing: **TRAFFIC SIGNS AND PAVEMENT MARKINGS PLAN - 23**

Sheet: TR-1.23

Total Sheets: 381

File No.

File: C:\PWWORKING\EAST011D0786396\8412R_TR(CNS_PVMT MRKS PLANS).DWG Plotted: 4/19/2022 1:55:42 PM

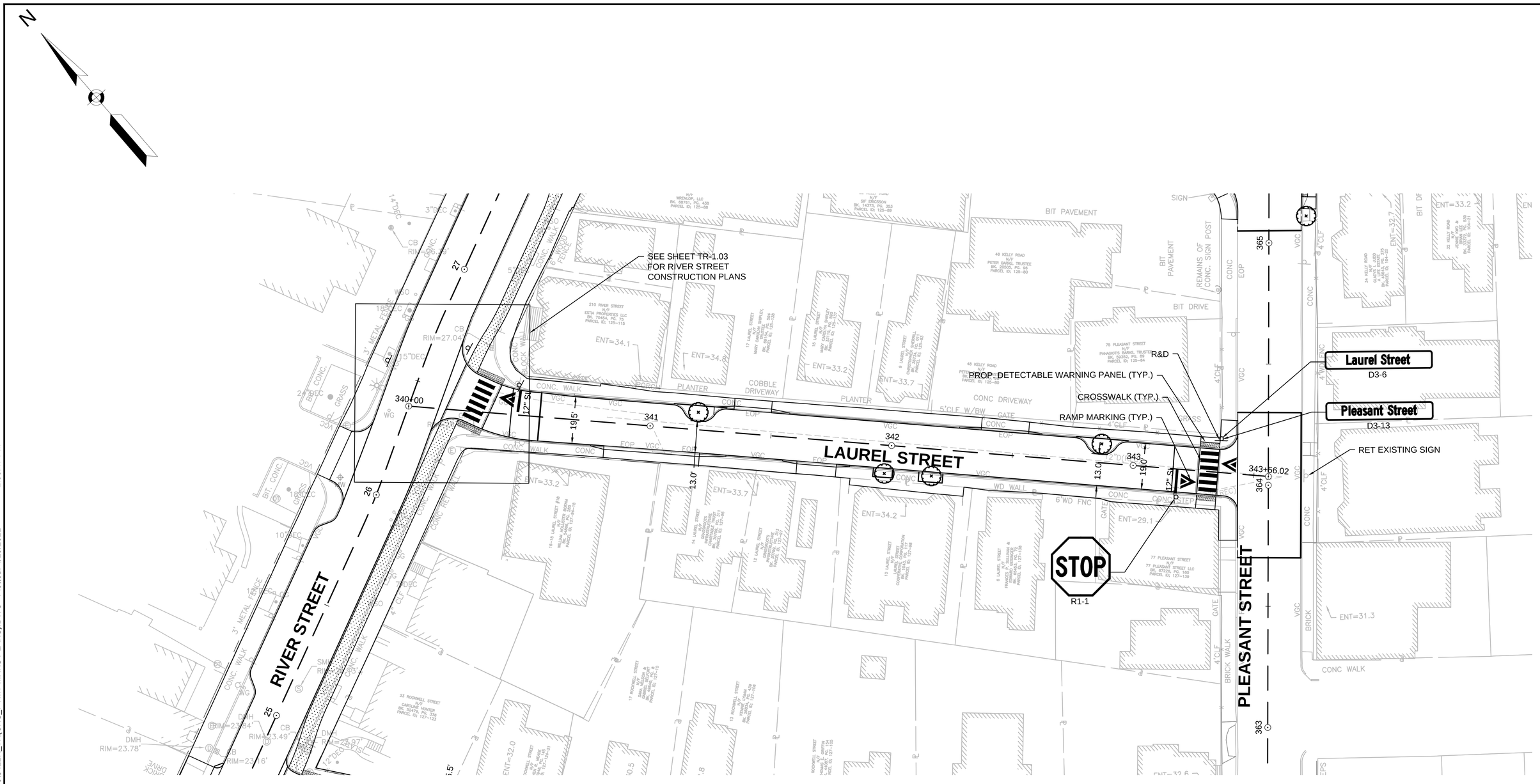

NOTES:

1. ALL EXISTING SIGNS AND POSTS SHALL BE REMOVED UNLESS OTHERWISE NOTED. ALL REINSTALLED EXISTING SIGNS AND PROPOSED SIGNS SHALL BE LOCATED A LATERAL CLEARANCE OF 1' (MIN) FROM BACK OF CURB.
2. THE CONTRACTOR SHALL COORDINATE THE FINAL PAVEMENT MARKING CONFIGURATION WITH THE CITY PRIOR TO PLACING PAVEMENT MARKINGS.
3. CITY CURB USE REGULATION SIGNS TO BE FURTHER DEVELOPED IN COORDINATION WITH TPT AND SHOWN ON FUTURE DESIGN SUBMISSIONS.

PLAN

0 20 50 100

SCALE: 1" = 20'

ISSUED FOR BID

HDR ENGINEERING, INC.
99 HIGH STREET, SUITE 2300
BOSTON, MASSACHUSETTS 02110–2378
(617) 357–7700

COMMONWEALTH OF MASSACHUSETTS
PHILIP FUSCO
CIVIL
No. 45868
REGISTERED PROFESSIONAL ENGINEER

Scale			
Date			
Job No.			
Designed by			
Drawn by			
Checked by	No.	Description	Date
Approved by	REVISIONS		

THE WORKS — CAMBRIDGE DEPARTMENT OF PUBLIC

Client	CITY OF CAMBRIDGE, MA	Sheet	TR-1.24
Project	RIVER STREET INFRASTRUCTURE AND STREETSCAPE PROJECT	Total Sheets	381
Drawing	**TRAFFIC SIGNS AND PAVEMENT MARKINGS PLAN - 24**	File No.	

File: C:\PWWORKING\EAST01\D0786396\8412R_TR(CNS_PVMT MRKS PLANS).DWG Plotted: 4/19/2022 1:55:47 PM

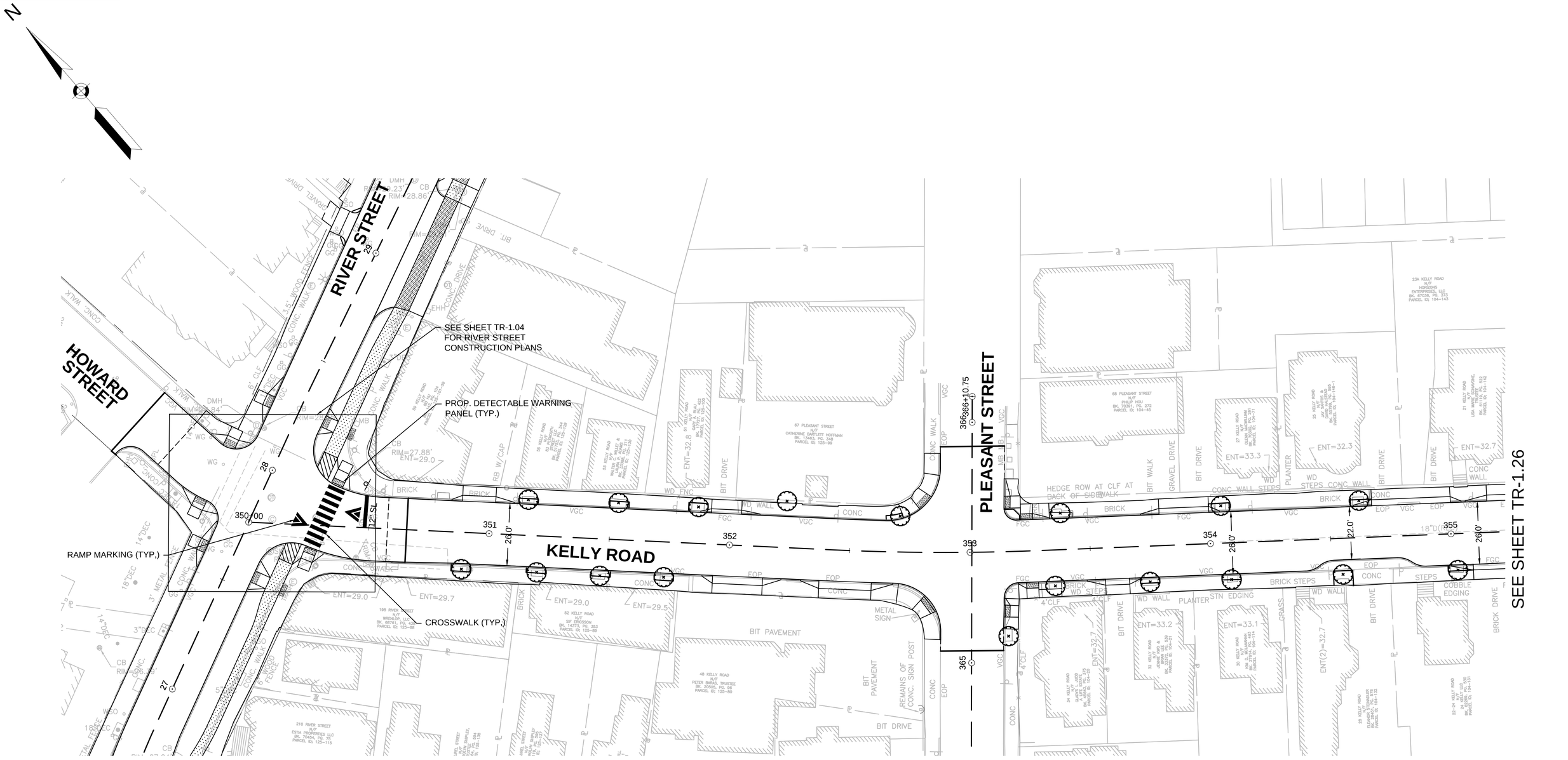

NOTES:

1. ALL EXISTING SIGNS AND POSTS SHALL BE REMOVED UNLESS OTHERWISE NOTED. ALL REINSTALLED EXISTING SIGNS AND PROPOSED SIGNS SHALL BE LOCATED A LATERAL CLEARANCE OF 1' (MIN) FROM BACK OF CURB.
2. THE CONTRACTOR SHALL COORDINATE THE FINAL PAVEMENT MARKING CONFIGURATION WITH THE CITY PRIOR TO PLACING PAVEMENT MARKINGS.
3. CITY CURB USE REGULATION SIGNS TO BE FURTHER DEVELOPED IN COORDINATION WITH TPT AND SHOWN ON FUTURE DESIGN SUBMISSIONS.

PLAN

0 20 50 100

SCALE: 1" = 20'

ISSUED FOR BID

HDR ENGINEERING, INC.
99 HIGH STREET, SUITE 2300
BOSTON, MASSACHUSETTS 02110–2378
(617) 357–7700

COMMONWEALTH OF MASSACHUSETTS
PHILIP FUSCO
CIVIL
No. 45868
REGISTERED PROFESSIONAL ENGINEER

Scale			
Date			
Job No.			
Designed by			
Drawn by			
Checked by	No.	Description	Date
Approved by	REVISIONS		

CAMBRIDGE DEPARTMENT OF PUBLIC WORKS

Client: CITY OF CAMBRIDGE, MA	Sheet: TR-1.25
Project: RIVER STREET INFRASTRUCTURE AND STREETSCAPE PROJECT	Total Sheets: 381
Drawing: **TRAFFIC SIGNS AND PAVEMENT MARKINGS PLAN - 25**	File No.

File: C:\PWWORKING\EAST01\D07863968\8412R_TR(CNS_PVMT MRKS PLANS).DWG Plotted: 4/19/2022 1:55:52 PM

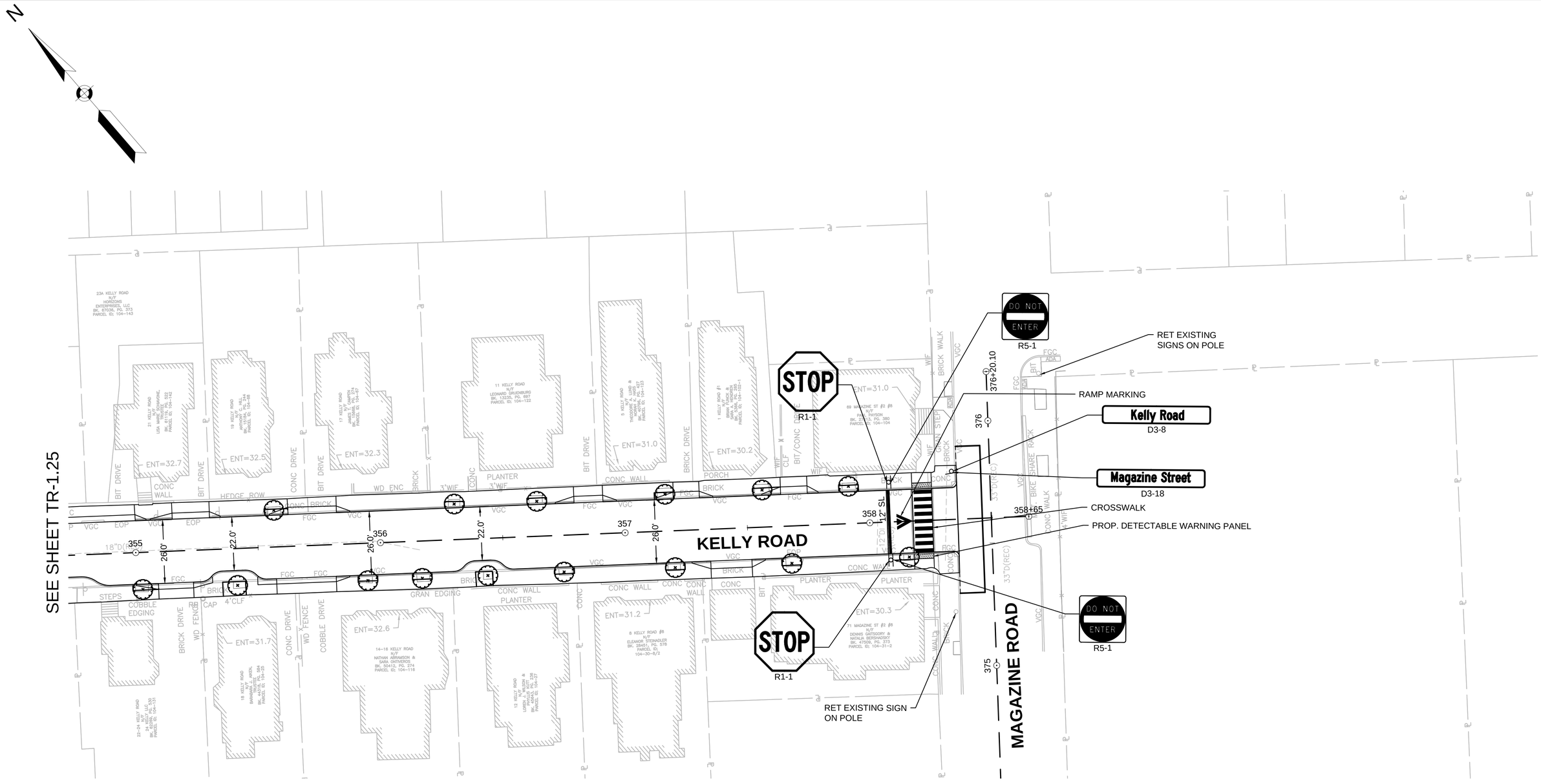

NOTES:

1. ALL EXISTING SIGNS AND POSTS SHALL BE REMOVED UNLESS OTHERWISE NOTED. ALL REINSTALLED EXISTING SIGNS AND PROPOSED SIGNS SHALL BE LOCATED A LATERAL CLEARANCE OF 1' (MIN) FROM BACK OF CURB.
2. THE CONTRACTOR SHALL COORDINATE THE FINAL PAVEMENT MARKING CONFIGURATION WITH THE CITY PRIOR TO PLACING PAVEMENT MARKINGS.
3. CITY CURB USE REGULATION SIGNS TO BE FURTHER DEVELOPED IN COORDINATION WITH TPT AND SHOWN ON FUTURE DESIGN SUBMISSIONS.

PLAN

0 20 50 100

SCALE: 1" = 20'

ISSUED FOR BID

HDR ENGINEERING, INC.
99 HIGH STREET, SUITE 2300
BOSTON, MASSACHUSETTS 02110-2378
(617) 357-7700

COMMONWEALTH OF MASSACHUSETTS
PHILIP FUSCO
CIVIL
No. 45868
REGISTERED PROFESSIONAL ENGINEER

Scale			
Date			
Job No.			
Designed by			
Drawn by			
Checked by	No.	Description	Date
Approved by	REVISIONS		

THE WORKS — CAMBRIDGE DEPARTMENT OF PUBLIC WORKS

Client: CITY OF CAMBRIDGE, MA

Project: RIVER STREET INFRASTRUCTURE AND STREETSCAPE PROJECT

Drawing: **TRAFFIC SIGNS AND PAVEMENT MARKINGS PLAN - 26**

Sheet: TR-1.26

Total Sheets: 381

File No.

File: C:\PWWORKING\EAST01\D0786396\8412R_TR(CNS_PVMT MRKS PLANS).DWG Plotted: 4/19/2022 1:55:58 PM

IDENTIFI-CATION NUMBER	SIZE OF SIGN WIDTH (IN)	SIZE OF SIGN HEIGHT (IN)	TEXT	TEXT DIMENSIONS (mm) LETTER HEIGHT	TEXT DIMENSIONS (mm) VERTICAL SPACING	TEXT DIMENSIONS (mm) ARROW RTE MKR	NUMBER OF SIGNS REQUIRED	COLOR BACK-GROUND	COLOR LEGEND	COLOR BORDER	POST SIZE AND NUMBER REQUIRED	UNIT AREA IN SQUARE FEET	TOTAL AREA IN SQUARE FEET
R1-1	30	30	STOP	SEE STANDARDS(1)			9	SEE STANDARDS(1)			-	6.25	56.25
R3-1	24	24					1				-	4.00	4.0
R3-2	24	24					2				-	4.00	8.0
R5-1	30	30	DO NOT ENTER				6				-	6.25	37.5
R6-1L	36	12	ONE WAY				1				-	3.00	3.0
W13-1P (10 MPH)	24	24	10 MPH				2				-	4.00	8.0
OM-3R	12	36					1				-	3.00	3.0

IDENTIFI-CATION NUMBER	SIZE OF SIGN WIDTH (IN)	SIZE OF SIGN HEIGHT (IN)	TEXT	TEXT DIMENSIONS (mm) LETTER HEIGHT	TEXT DIMENSIONS (mm) VERTICAL SPACING	TEXT DIMENSIONS (mm) ARROW RTE MKR	NUMBER OF SIGNS REQUIRED	COLOR BACK-GROUND	COLOR LEGEND	COLOR BORDER	POST SIZE AND NUMBER REQUIRED	UNIT AREA IN SQUARE FEET	TOTAL AREA IN SQUARE FEET
D3-4	30	9	Fairmont Street	SEE STANDARDS(1)			1	SEE STANDARDS(1)			-	1.875	1.875
D3-5	30	9	Rockwell Street				1				-	1.875	1.875
D3-6	30	9	Laurel Street				1				-	1.875	1.875
D3-8	30	9	Kelly Road				1				-	1.875	1.875
D3-13	30	9	Pleasant Street				2				-	1.875	3.75
D3-18	30	9	Magazine Street				1				-	1.875	1.875
D3-19	30	9	Fairmont Ave				2				-	1.875	3.75
D3-20	30	9	Andrew Street				1				-	1.875	1.875
D3-21	30	9	Allston Street				1				-	1.875	1.875
SP-1	36	36	SHARED STREET				2				-	3.00	6.0
①						TOTAL NUMBER OF SIGNS	35			TOTAL AREA OF SIGNS (SQUARE FEET)			152.9 SF

NOTES:
1. ALL TRAFFIC SIGNS SHALL CONFORM TO FEDERAL HIGHWAY ADMINISTRATION'S MANUAL ON UNIFORM CONTROL DEVICES (MUTCD, OR THE MANUAL) CURRENT EDITION, 2004 STANDARD HIGHWAY SIGNS WITH 2012 SUPPLEMENT, AND CITY OF CAMBRIDGE TRAFFIC DEPARTMENT SIGN SPECIFICATION 2017
2. CONTRACTOR RESPONSIBLE FOR ENSURING THAT PROPOSED SIGN WORDING AND RESTRICTIONS MATCH EXISTING SIGN TO BE REPLACED
3. UNLESS OTHERWISE NOTED, ALL POSTS TO BE MASSDOT U-CHANNEL

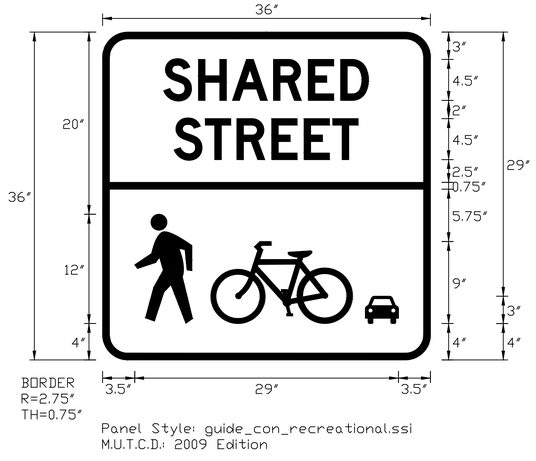

Panel Style: guide_con_recreational.ssi
M.U.T.C.D.: 2009 Edition

ISSUED FOR BID

HDR ENGINEERING, INC.
99 HIGH STREET, SUITE 2300
BOSTON, MASSACHUSETTS 02110-2378
(617) 357-7700

COMMONWEALTH OF MASSACHUSETTS
PHILIP FUSCO
CIVIL
No. 45868
REGISTERED PROFESSIONAL ENGINEER

Scale			
Date			
Job No.			
Designed by			
Drawn by			
Checked by	No.	Description	Date
Approved by	REVISIONS		

THE WORKS — CAMBRIDGE DEPARTMENT OF PUBLIC WORKS

Client	CITY OF CAMBRIDGE, MA
Project	RIVER STREET INFRASTRUCTURE AND STREETSCAPE PROJECT
Drawing	TRAFFIC SIGNS AND PAVEMENT MARKINGS PLAN - 27
Sheet	TR-127
Total Sheets	381
File No.	

File: C:\PWWORKING\EAST01\D0786396\8412R_TR(CNS_PVMT MRKS PLANS).DWG Plotted: 4/19/2022 1:56:00 PM

FAIRMONT AVENUE WORK ZONE

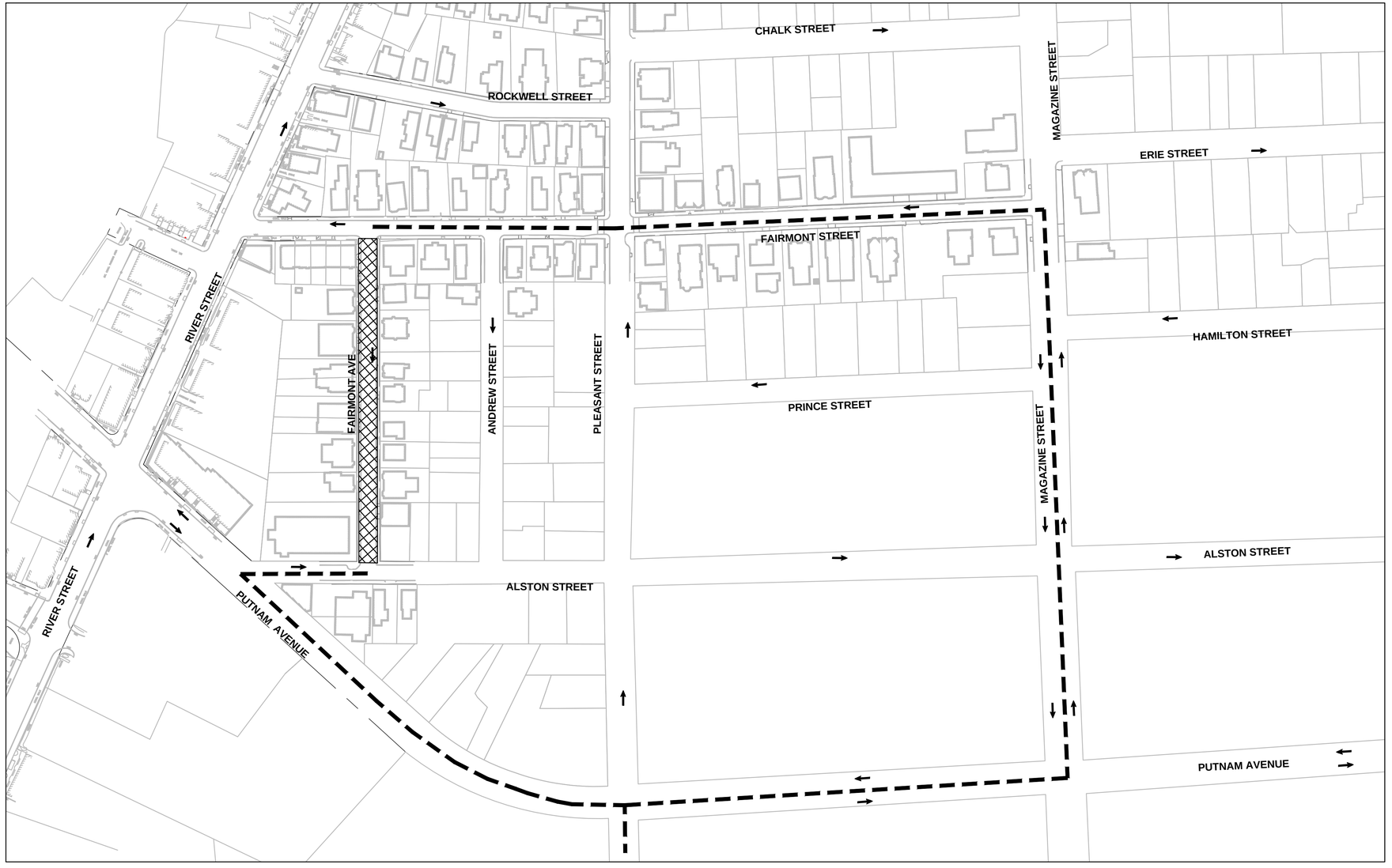

NOTES:

1. DETOURS SHALL BE POSTED WITH "ROAD CLOSED" AND DETOUR SIGNS.
2. DETOUR SIGNS SHALL BE POSTED WITH A STREET NAME PLAQUE OF THE STREET BEING DETOURED.
3. DETOUR SIGNS AND PLAQUES SHALL BE POSTED AT EACH INTERSECTION AND A DETOUR SIGN AND PLAQUE WILL BE POSTED MID-BLOCK.
4. ALL DETOURS SHALL BE MUTCD COMPLIANT.
5. ALL TRAFFIC PLANS SHALL BE SUBMITTED TO THE ENGINEER AND THE CITY FOR APPROVAL BEFORE WORK COMMENCES.
6. ANY WORK THAT IMPACTS PUBLIC BUSING OR PRIVATE BUSING SHALL BE COORDINATED AT LEAST TWO WEEKS AHEAD OF TIME (EX. SCHOOL AND MBTA BUSES).

LEGEND

- TRAFFIC FLOW DIRECTION
- PROPOSED WORK ZONE
- PROPOSED DETOUR ROUTE

PLAN

0 80 200 300

SCALE: 1" = 80'

ISSUED FOR BID

HDR ENGINEERING, INC.
99 HIGH STREET, SUITE 2300
BOSTON, MASSACHUSETTS 02110-2378
(617) 357-7700

COMMONWEALTH OF MASSACHUSETTS
PHILIP FUSCO
CIVIL
No. 45868
REGISTERED PROFESSIONAL ENGINEER

Scale			
Date			
Job No.			
Designed by			
Drawn by			
Checked by	No.	Description	Date
Approved by	REVISIONS		

THE WORKS — CAMBRIDGE DEPARTMENT OF PUBLIC WORKS

Client	CITY OF CAMBRIDGE, MA	Sheet TMP-6.01
Project	RIVER STREET INFRASTRUCTURE AND STREETSCAPE PROJECT	Total Sheets 381
Drawing	**TRAFFIC MANAGEMENT PLANS - DETOUR PLANS (1 OF 14)**	File No.

File: C:\PWWORKING\EAST011D0786396\8412R_TR(CNS_DETOUR PLANS).DWG Plotted: 4/19/2022
1:56:29 PM

ANDREW STREET WORK ZONE

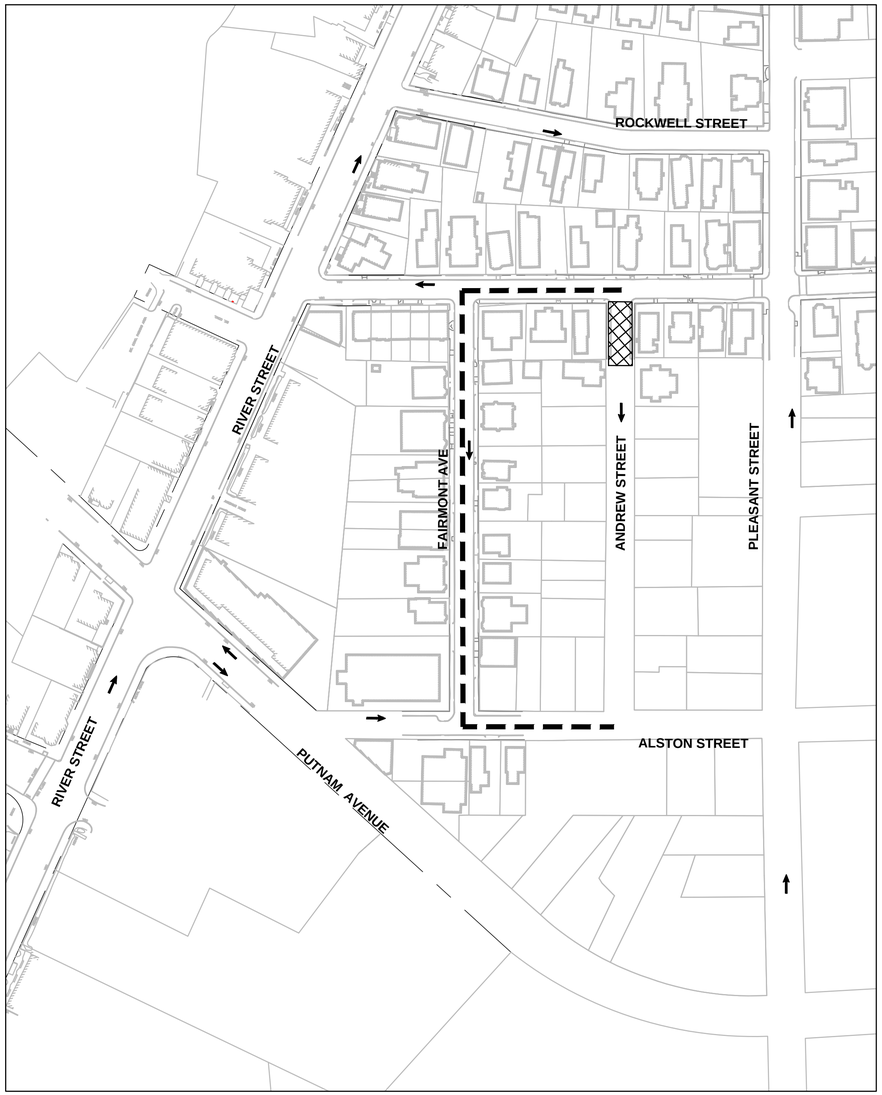

NOTES:

1. DETOURS SHALL BE POSTED WITH "ROAD CLOSED" AND DETOUR SIGNS.
2. DETOUR SIGNS SHALL BE POSTED WITH A STREET NAME PLAQUE OF THE STREET BEING DETOURED.
3. DETOUR SIGNS AND PLAQUES SHALL BE POSTED AT EACH INTERSECTION AND A DETOUR SIGN AND PLAQUE WILL BE POSTED MID-BLOCK.
4. ALL DETOURS SHALL BE MUTCD COMPLIANT.
5. ALL TRAFFIC PLANS SHALL BE SUBMITTED TO THE ENGINEER AND THE CITY FOR APPROVAL BEFORE WORK COMMENCES.
6. ANY WORK THAT IMPACTS PUBLIC BUSING OR PRIVATE BUSING SHALL BE COORDINATED AT LEAST TWO WEEKS AHEAD OF TIME (EX. SCHOOL AND MBTA BUSES).

LEGEND

- TRAFFIC FLOW DIRECTION
- PROPOSED WORK ZONE
- PROPOSED DETOUR ROUTE

PLAN

0 80 200 300

SCALE: 1" = 80'

ISSUED FOR BID

HDR ENGINEERING, INC.
99 HIGH STREET, SUITE 2300
BOSTON, MASSACHUSETTS 02110-2378
(617) 357-7700

COMMONWEALTH OF MASSACHUSETTS
PHILIP FUSCO
CIVIL
No. 45868
REGISTERED PROFESSIONAL ENGINEER

Scale			
Date			
Job No.			
Designed by			
Drawn by			
Checked by	No.	Description	Date
Approved by	REVISIONS		

CAMBRIDGE DEPARTMENT OF PUBLIC WORKS

Client	CITY OF CAMBRIDGE, MA	Sheet TMP-6.02
Project	RIVER STREET INFRASTRUCTURE AND STREETSCAPE PROJECT	Total Sheets 381
Drawing	**TRAFFIC MANAGEMENT PLANS - DETOUR PLANS (2 OF 14)**	File No.

File: C:\PWWORKING\EAST01\D0786396\8412R_TR(CNS_DETOUR PLANS).DWG Plotted: 4/19/2022 1:56:31 PM

PLEASANT STREET & FAIRMONT STREET
INTERSECTION WORK ZONE

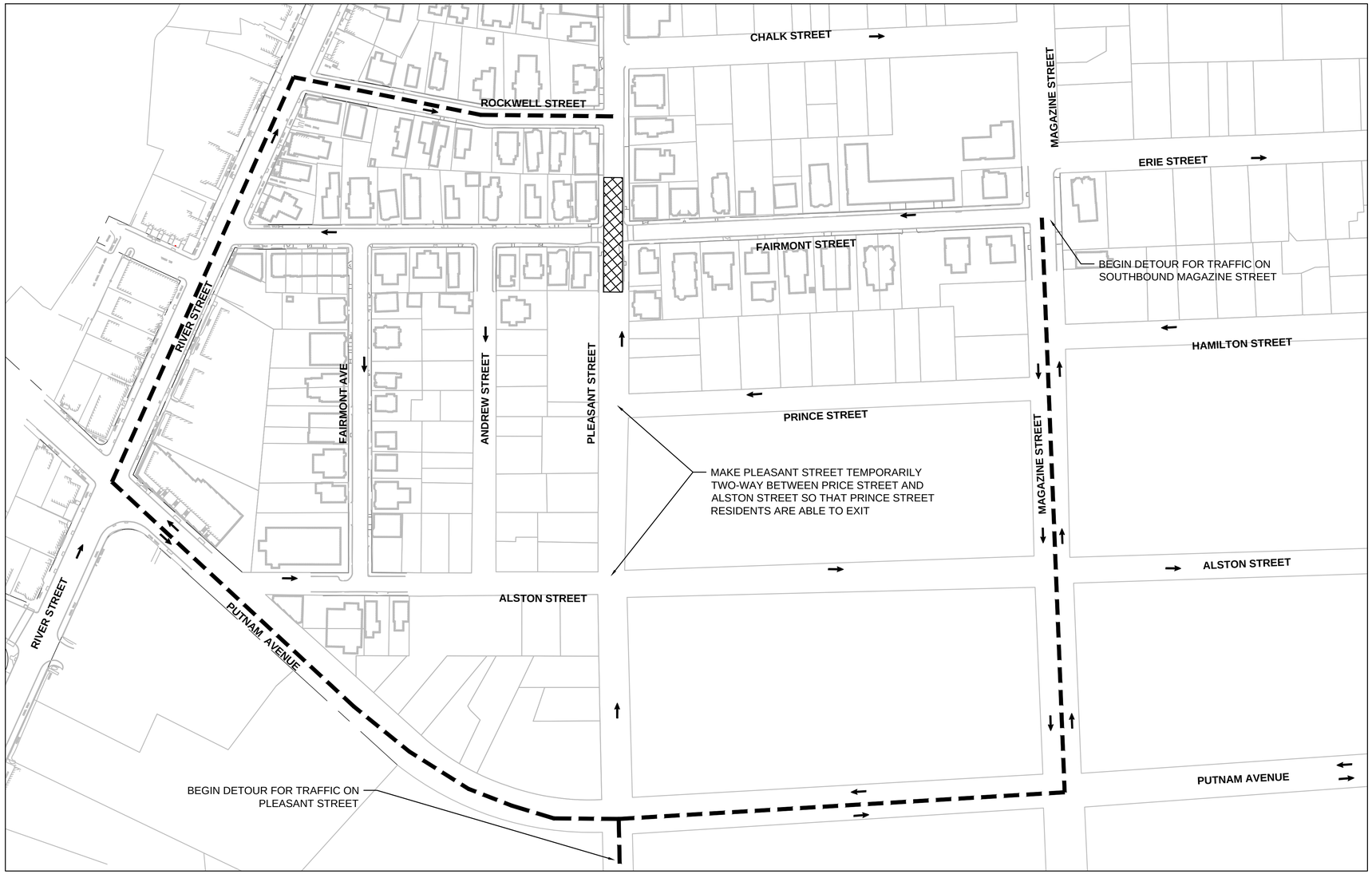

NOTES:
1. DETOURS SHALL BE POSTED WITH "ROAD CLOSED" AND DETOUR SIGNS.
2. DETOUR SIGNS SHALL BE POSTED WITH A STREET NAME PLAQUE OF THE STREET BEING DETOURED.
3. DETOUR SIGNS AND PLAQUES SHALL BE POSTED AT EACH INTERSECTION AND A DETOUR SIGN AND PLAQUE WILL BE POSTED MID-BLOCK.
4. ALL DETOURS SHALL BE MUTCD COMPLIANT.
5. ALL TRAFFIC PLANS SHALL BE SUBMITTED TO THE ENGINEER AND THE CITY FOR APPROVAL BEFORE WORK COMMENCES.
6. ANY WORK THAT IMPACTS PUBLIC BUSING OR PRIVATE BUSING SHALL BE COORDINATED AT LEAST TWO WEEKS AHEAD OF TIME (EX. SCHOOL AND MBTA BUSES).

LEGEND
- TRAFFIC FLOW DIRECTION
- PROPOSED WORK ZONE
- PROPOSED DETOUR ROUTE

PLAN

0 80 200 300

SCALE: 1" = 80'

ISSUED FOR BID

HDR ENGINEERING, INC.
99 HIGH STREET, SUITE 2300
BOSTON, MASSACHUSETTS 02110–2378
(617) 357–7700

COMMONWEALTH OF MASSACHUSETTS
PHILIP FUSCO
CIVIL
No. 45868
REGISTERED PROFESSIONAL ENGINEER

Scale			
Date			
Job No.			
Designed by			
Drawn by			
Checked by	No.	Description	Date
Approved by	REVISIONS		

CAMBRIDGE DEPARTMENT OF PUBLIC THE WORKS

Client: CITY OF CAMBRIDGE, MA

Project: RIVER STREET
INFRASTRUCTURE AND STREETSCAPE PROJECT

Drawing: **TRAFFIC MANAGEMENT PLANS - DETOUR PLANS (3 OF 14)**

Sheet: TMP-6.03

Total Sheets: 381

File No.

File: C:\PW\WORKING\EAST\D1\D0786396\8412R_TR(CNS_DETOUR PLANS).DWG Plotted: 4/19/2022 1:56:36 PM

FAIRMONT STREET WORK ZONE
(BETWEEN PLEASANT STREET & RIVER STREET)

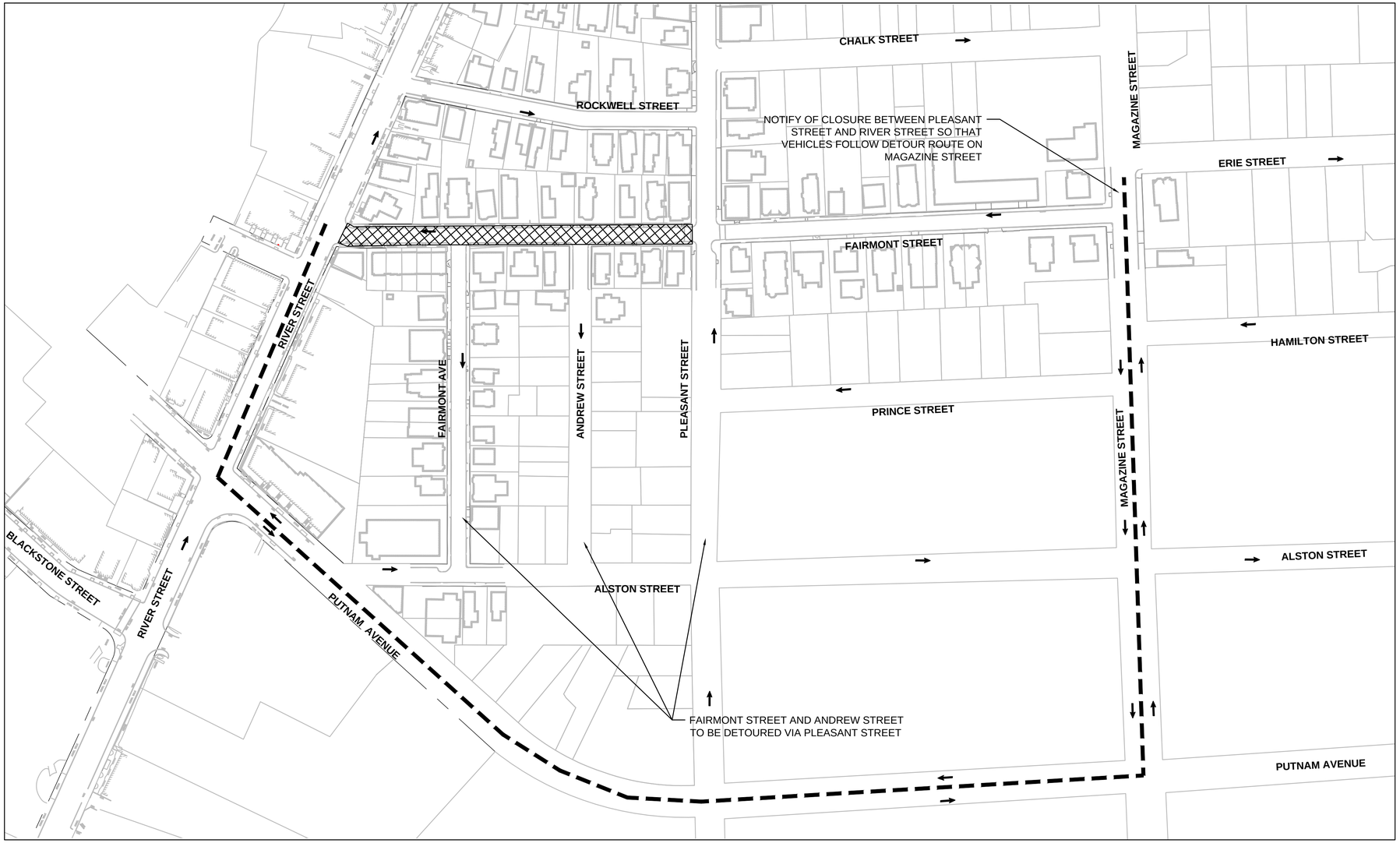

NOTES:

1. DETOURS SHALL BE POSTED WITH "ROAD CLOSED" AND DETOUR SIGNS.
2. DETOUR SIGNS SHALL BE POSTED WITH A STREET NAME PLAQUE OF THE STREET BEING DETOURED.
3. DETOUR SIGNS AND PLAQUES SHALL BE POSTED AT EACH INTERSECTION AND A DETOUR SIGN AND PLAQUE WILL BE POSTED MID-BLOCK.
4. ALL DETOURS SHALL BE MUTCD COMPLIANT.
5. ALL TRAFFIC PLANS SHALL BE SUBMITTED TO THE ENGINEER AND THE CITY FOR APPROVAL BEFORE WORK COMMENCES.
6. ANY WORK THAT IMPACTS PUBLIC BUSING OR PRIVATE BUSING SHALL BE COORDINATED AT LEAST TWO WEEKS AHEAD OF TIME (EX. SCHOOL AND MBTA BUSES).

LEGEND

- TRAFFIC FLOW DIRECTION
- PROPOSED WORK ZONE
- PROPOSED DETOUR ROUTE

PLAN

0 80 200 300

SCALE: 1" = 80'

ISSUED FOR BID

HDR ENGINEERING, INC.
99 HIGH STREET, SUITE 2300
BOSTON, MASSACHUSETTS 02110-2378
(617) 357-7700

COMMONWEALTH OF MASSACHUSETTS
PHILIP FUSCO
CIVIL
No. 45868
REGISTERED PROFESSIONAL ENGINEER

Scale			
Date			
Job No.			
Designed by			
Drawn by			
Checked by	No.	Description	Date
Approved by	REVISIONS		

THE WORKS — CAMBRIDGE DEPARTMENT OF PUBLIC WORKS

Client	CITY OF CAMBRIDGE, MA	Sheet	TMP-6.04
Project	RIVER STREET INFRASTRUCTURE AND STREETSCAPE PROJECT	Total Sheets	381
Drawing	**TRAFFIC MANAGEMENT PLANS - DETOUR PLANS (4 OF 14)**	File No.	

File: C:\PWWORKING\EAST01\D0786396\8412R_TR(CNS_DETOUR PLANS).DWG Plotted: 4/19/2022
1:56:41 PM

FAIRMONT STREET WORK ZONE
(BETWEEN MAGAZINE STREET & PLEASANT STREET)

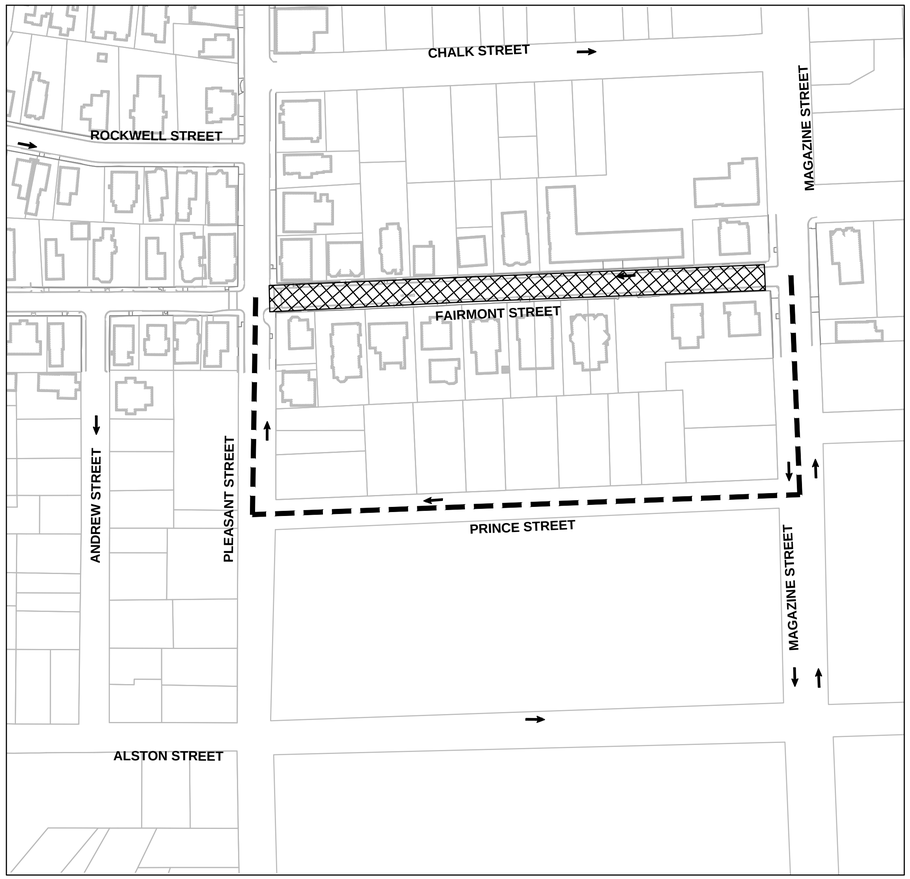

NOTES:
1. DETOURS SHALL BE POSTED WITH "ROAD CLOSED" AND DETOUR SIGNS.
2. DETOUR SIGNS SHALL BE POSTED WITH A STREET NAME PLAQUE OF THE STREET BEING DETOURED.
3. DETOUR SIGNS AND PLAQUES SHALL BE POSTED AT EACH INTERSECTION AND A DETOUR SIGN AND PLAQUE WILL BE POSTED MID-BLOCK.
4. ALL DETOURS SHALL BE MUTCD COMPLIANT.
5. ALL TRAFFIC PLANS SHALL BE SUBMITTED TO THE ENGINEER AND THE CITY FOR APPROVAL BEFORE WORK COMMENCES.
6. ANY WORK THAT IMPACTS PUBLIC BUSING OR PRIVATE BUSING SHALL BE COORDINATED AT LEAST TWO WEEKS AHEAD OF TIME (EX. SCHOOL AND MBTA BUSES).

LEGEND
- TRAFFIC FLOW DIRECTION
- PROPOSED WORK ZONE
- PROPOSED DETOUR ROUTE

PLAN

0 80 200 300

SCALE: 1" = 80'

ISSUED FOR BID

HDR ENGINEERING, INC.
99 HIGH STREET, SUITE 2300
BOSTON, MASSACHUSETTS 02110-2378
(617) 357-7700

COMMONWEALTH OF MASSACHUSETTS
PHILIP FUSCO
CIVIL
No. 45868
REGISTERED PROFESSIONAL ENGINEER

Scale			
Date			
Job No.			
Designed by			
Drawn by			
Checked by	No.	Description	Date
Approved by	REVISIONS		

THE WORKS — CAMBRIDGE DEPARTMENT OF PUBLIC WORKS

Client: CITY OF CAMBRIDGE, MA

Project: RIVER STREET
INFRASTRUCTURE AND STREETSCAPE PROJECT

Drawing: **TRAFFIC MANAGEMENT PLANS - DETOUR PLANS (5 OF 14)**

Sheet: TMP-6.05

Total Sheets: 381

File No.:

File: C:\PWWORKING\EAST01\D07863968412R_TR(CNS_DETOUR PLANS).DWG Plotted: 4/19/2022
1:56:47 PM

FAIRMONT STREET & MAGAZINE STREET
INTERSECTION WORK ZONE

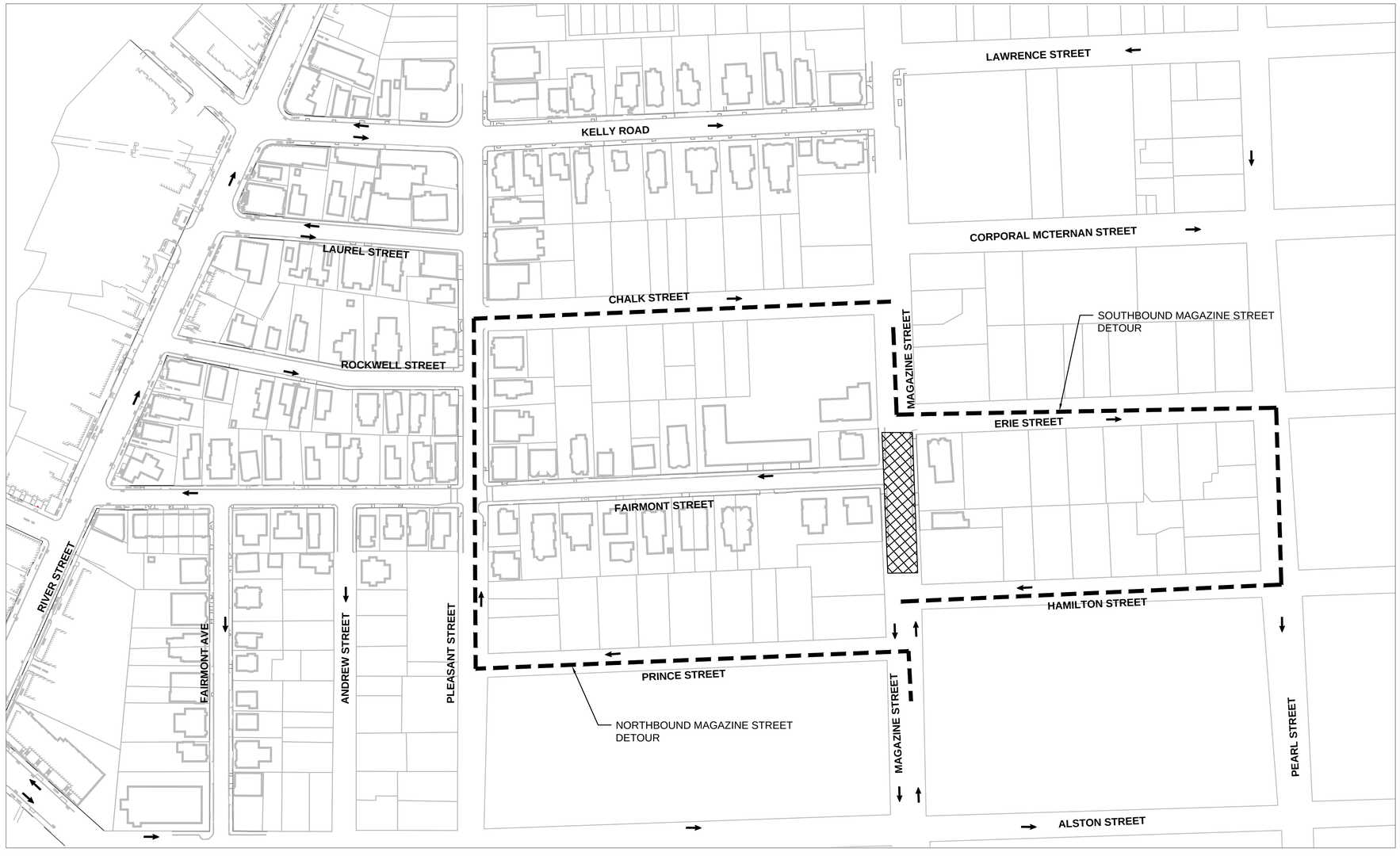

NOTES:

1. DETOURS SHALL BE POSTED WITH "ROAD CLOSED" AND DETOUR SIGNS.
2. DETOUR SIGNS SHALL BE POSTED WITH A STREET NAME PLAQUE OF THE STREET BEING DETOURED.
3. DETOUR SIGNS AND PLAQUES SHALL BE POSTED AT EACH INTERSECTION AND A DETOUR SIGN AND PLAQUE WILL BE POSTED MID-BLOCK.
4. ALL DETOURS SHALL BE MUTCD COMPLIANT.
5. ALL TRAFFIC PLANS SHALL BE SUBMITTED TO THE ENGINEER AND THE CITY FOR APPROVAL BEFORE WORK COMMENCES.
6. ANY WORK THAT IMPACTS PUBLIC BUSING OR PRIVATE BUSING SHALL BE COORDINATED AT LEAST TWO WEEKS AHEAD OF TIME (EX. SCHOOL AND MBTA BUSES).

LEGEND

- TRAFFIC FLOW DIRECTION
- PROPOSED WORK ZONE
- PROPOSED DETOUR ROUTE

PLAN

0 80 200 300

SCALE: 1" = 80'

ISSUED FOR BID

HDR ENGINEERING, INC.
99 HIGH STREET, SUITE 2300
BOSTON, MASSACHUSETTS 02110–2378
(617) 357–7700

COMMONWEALTH OF MASSACHUSETTS
PHILIP FUSCO
CIVIL
No. 45868
REGISTERED PROFESSIONAL ENGINEER

Scale			
Date			
Job No.			
Designed by			
Drawn by			
Checked by	No.	Description	Date
Approved by	REVISIONS		

THE WORKS — CAMBRIDGE DEPARTMENT OF PUBLIC WORKS

Client: CITY OF CAMBRIDGE, MA	Sheet: TMP-6.06
Project: RIVER STREET INFRASTRUCTURE AND STREETSCAPE PROJECT	Total Sheets: 381
Drawing: **TRAFFIC MANAGEMENT PLANS - DETOUR PLANS (6 OF 14)**	File No.

File: C:\PWWORKING\EAST01\D07863968412R_TR(CNS_DETOUR PLANS).DWG Plotted: 4/19/2022 1:56:51 PM

KELLY ROAD & MAGAZINE STREET
INTERSECTION WORK ZONE

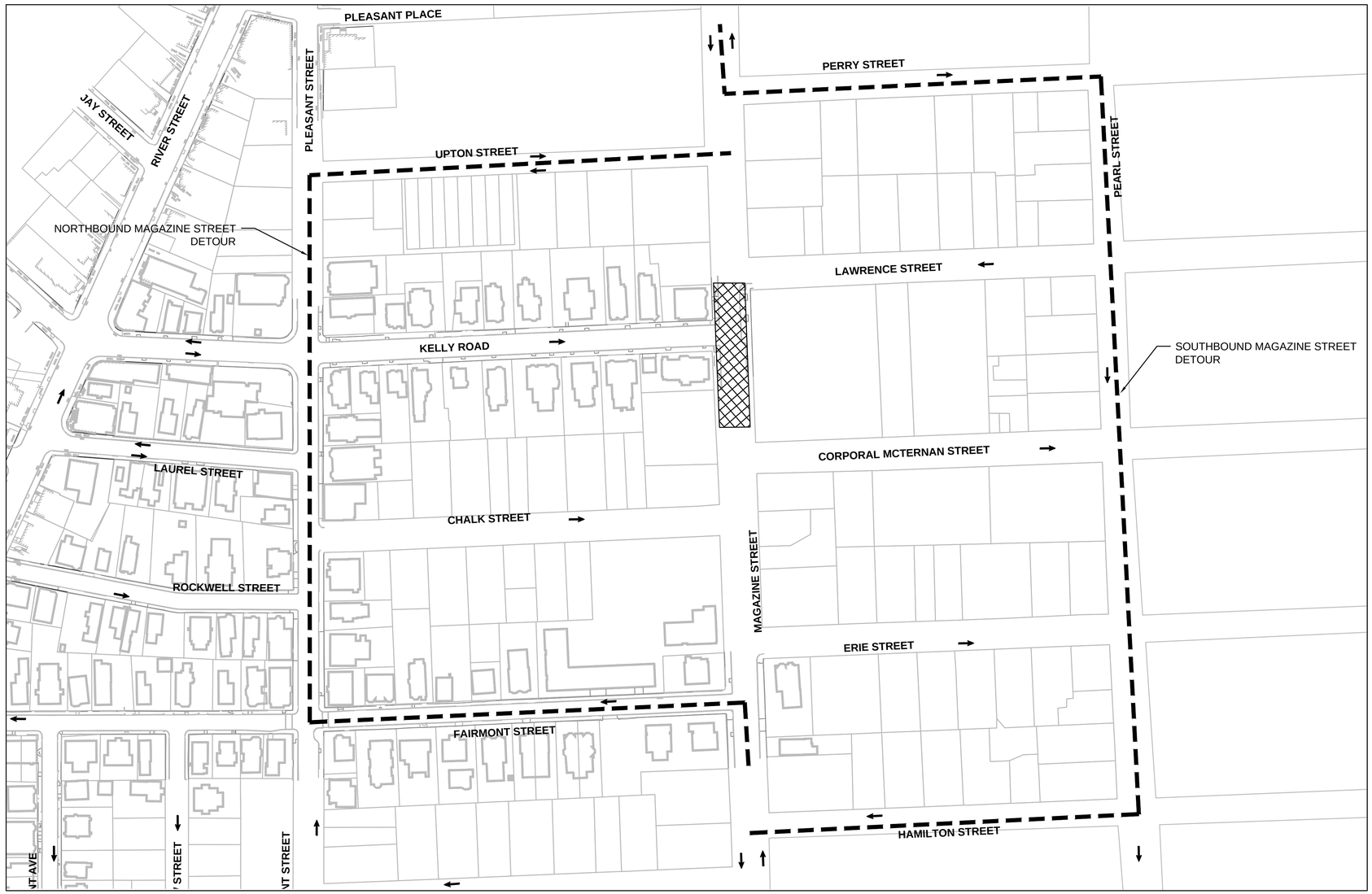

NOTES:

1. DETOURS SHALL BE POSTED WITH "ROAD CLOSED" AND DETOUR SIGNS.
2. DETOUR SIGNS SHALL BE POSTED WITH A STREET NAME PLAQUE OF THE STREET BEING DETOURED.
3. DETOUR SIGNS AND PLAQUES SHALL BE POSTED AT EACH INTERSECTION AND A DETOUR SIGN AND PLAQUE WILL BE POSTED MID-BLOCK.
4. ALL DETOURS SHALL BE MUTCD COMPLIANT.
5. ALL TRAFFIC PLANS SHALL BE SUBMITTED TO THE ENGINEER AND THE CITY FOR APPROVAL BEFORE WORK COMMENCES.
6. ANY WORK THAT IMPACTS PUBLIC BUSING OR PRIVATE BUSING SHALL BE COORDINATED AT LEAST TWO WEEKS AHEAD OF TIME (EX. SCHOOL AND MBTA BUSES).

LEGEND

- TRAFFIC FLOW DIRECTION
- PROPOSED WORK ZONE
- PROPOSED DETOUR ROUTE

PLAN

0 80 200 300

SCALE: 1" = 80'

ISSUED FOR BID

HDR ENGINEERING, INC.
99 HIGH STREET, SUITE 2300
BOSTON, MASSACHUSETTS 02110-2378
(617) 357-7700

COMMONWEALTH OF MASSACHUSETTS
PHILIP FUSCO
CIVIL
No. 45868
REGISTERED PROFESSIONAL ENGINEER

Scale			
Date			
Job No.			
Designed by			
Drawn by			
Checked by	No.	Description	Date
Approved by	REVISIONS		

THE WORKS — CAMBRIDGE DEPARTMENT OF PUBLIC

Client	CITY OF CAMBRIDGE, MA	Sheet	TMP-6.07
Project	RIVER STREET INFRASTRUCTURE AND STREETSCAPE PROJECT	Total Sheets	381
Drawing	**TRAFFIC MANAGEMENT PLANS - DETOUR PLANS (7 OF 14)**	File No.	

File: C:\PWWORKING\EAST01\D07863968412R_TR(CNS_DETOUR PLANS).DWG Plotted: 4/19/2022 1:56:57 PM

ROCKWELL STREET & PLEASANT STREET
INTERSECTION WORK ZONE

NOTES:
1. DETOURS SHALL BE POSTED WITH "ROAD CLOSED" AND DETOUR SIGNS.
2. DETOUR SIGNS SHALL BE POSTED WITH A STREET NAME PLAQUE OF THE STREET BEING DETOURED.
3. DETOUR SIGNS AND PLAQUES SHALL BE POSTED AT EACH INTERSECTION AND A DETOUR SIGN AND PLAQUE WILL BE POSTED MID-BLOCK.
4. ALL DETOURS SHALL BE MUTCD COMPLIANT.
5. ALL TRAFFIC PLANS SHALL BE SUBMITTED TO THE ENGINEER AND THE CITY FOR APPROVAL BEFORE WORK COMMENCES.
6. ANY WORK THAT IMPACTS PUBLIC BUSING OR PRIVATE BUSING SHALL BE COORDINATED AT LEAST TWO WEEKS AHEAD OF TIME (EX. SCHOOL AND MBTA BUSES).

LEGEND

- TRAFFIC FLOW DIRECTION
- PROPOSED WORK ZONE
- PROPOSED DETOUR ROUTE

PLAN

0 80 200 300

SCALE: 1" = 80'

ISSUED FOR BID

HDR ENGINEERING, INC.
99 HIGH STREET, SUITE 2300
BOSTON, MASSACHUSETTS 02110–2378
(617) 357–7700

COMMONWEALTH OF MASSACHUSETTS
PHILIP FUSCO
CIVIL
No. 45868
REGISTERED PROFESSIONAL ENGINEER

Scale			
Date			
Job No.			
Designed by			
Drawn by			
Checked by	No.	Description	Date
Approved by	REVISIONS		

THE WORKS — CAMBRIDGE DEPARTMENT OF PUBLIC

Client: CITY OF CAMBRIDGE, MA

Project: RIVER STREET
INFRASTRUCTURE AND STREETSCAPE PROJECT

Drawing: **TRAFFIC MANAGEMENT PLANS - DETOUR PLANS (8 OF 14)**

Sheet: TMP-6.08

Total Sheets: 381

File No.:

File: C:\PWWORKING\EAST\D0786396\8412R_TR(CNS_DETOUR PLANS).DWG Plotted: 4/19/2022 1:57:02 PM

LAUREL STREET & PLEASANT STREET
INTERSECTION WORK ZONE

NOTES:
1. DETOURS SHALL BE POSTED WITH "ROAD CLOSED" AND DETOUR SIGNS.
2. DETOUR SIGNS SHALL BE POSTED WITH A STREET NAME PLAQUE OF THE STREET BEING DETOURED.
3. DETOUR SIGNS AND PLAQUES SHALL BE POSTED AT EACH INTERSECTION AND A DETOUR SIGN AND PLAQUE WILL BE POSTED MID-BLOCK.
4. ALL DETOURS SHALL BE MUTCD COMPLIANT.
5. ALL TRAFFIC PLANS SHALL BE SUBMITTED TO THE ENGINEER AND THE CITY FOR APPROVAL BEFORE WORK COMMENCES.
6. ANY WORK THAT IMPACTS PUBLIC BUSING OR PRIVATE BUSING SHALL BE COORDINATED AT LEAST TWO WEEKS AHEAD OF TIME (EX. SCHOOL AND MBTA BUSES).

LEGEND
- TRAFFIC FLOW DIRECTION
- PROPOSED WORK ZONE
- PROPOSED DETOUR ROUTE

PLAN

0 80 200 300

SCALE: 1" = 80'

ISSUED FOR BID

HDR ENGINEERING, INC.
99 HIGH STREET, SUITE 2300
BOSTON, MASSACHUSETTS 02110-2378
(617) 357-7700

COMMONWEALTH OF MASSACHUSETTS
PHILIP FUSCO
CIVIL
No. 45868
REGISTERED PROFESSIONAL ENGINEER

Scale			
Date			
Job No.			
Designed by			
Drawn by			
Checked by	No.	Description	Date
Approved by	REVISIONS		

THE WORKS — CAMBRIDGE DEPARTMENT OF PUBLIC

Client: CITY OF CAMBRIDGE, MA	Sheet: TMP-6.09
Project: RIVER STREET INFRASTRUCTURE AND STREETSCAPE PROJECT	Total Sheets: 381
Drawing: **TRAFFIC MANAGEMENT PLANS - DETOUR PLANS (9 OF 14)**	File No.

File: C:\PWWORKING\EAST\01\D0786396\8412R_TR(CNS_DETOUR PLANS).DWG Plotted: 4/19/2022 1:57:07 PM

ROCKWELL STREET WORK ZONE
(BETWEEN RIVER STREET & PLEASANT STREET)

NOTES:

1. DETOURS SHALL BE POSTED WITH "ROAD CLOSED" AND DETOUR SIGNS.
2. DETOUR SIGNS SHALL BE POSTED WITH A STREET NAME PLAQUE OF THE STREET BEING DETOURED.
3. DETOUR SIGNS AND PLAQUES SHALL BE POSTED AT EACH INTERSECTION AND A DETOUR SIGN AND PLAQUE WILL BE POSTED MID-BLOCK.
4. ALL DETOURS SHALL BE MUTCD COMPLIANT.
5. ALL TRAFFIC PLANS SHALL BE SUBMITTED TO THE ENGINEER AND THE CITY FOR APPROVAL BEFORE WORK COMMENCES.
6. ANY WORK THAT IMPACTS PUBLIC BUSING OR PRIVATE BUSING SHALL BE COORDINATED AT LEAST TWO WEEKS AHEAD OF TIME (EX. SCHOOL AND MBTA BUSES).

LEGEND

- TRAFFIC FLOW DIRECTION
- PROPOSED WORK ZONE
- PROPOSED DETOUR ROUTE

PLAN

0 80 200 300

SCALE: 1" = 80'

ISSUED FOR BID

HDR ENGINEERING, INC.
99 HIGH STREET, SUITE 2300
BOSTON, MASSACHUSETTS 02110–2378
(617) 357–7700

PHILIP FUSCO CIVIL No. 45868 REGISTERED PROFESSIONAL ENGINEER
COMMONWEALTH OF MASSACHUSETTS

Scale			
Date			
Job No.			
Designed by			
Drawn by			
Checked by	No.	Description	Date
Approved by	REVISIONS		

THE WORKS — CAMBRIDGE DEPARTMENT OF PUBLIC WORKS

Client	CITY OF CAMBRIDGE, MA	Sheet	TMP-6.10
Project	RIVER STREET INFRASTRUCTURE AND STREETSCAPE PROJECT	Total Sheets	381
Drawing	**TRAFFIC MANAGEMENT PLANS - DETOUR PLANS (10 OF 14)**	File No.	

File: C:\PW\WORKING\EAST01\D07863968\8412R_TR(CNS_DETOUR PLANS).DWG Plotted: 4/19/2022 1:57:11 PM

LAUREL STREET WORK ZONE
(BETWEEN RIVER STREET & PLEASANT STREET)

PLAN

0 80 200 300

SCALE: 1" = 80'

NOTES:

1. DETOURS SHALL BE POSTED WITH "ROAD CLOSED" AND DETOUR SIGNS.
2. DETOUR SIGNS SHALL BE POSTED WITH A STREET NAME PLAQUE OF THE STREET BEING DETOURED.
3. DETOUR SIGNS AND PLAQUES SHALL BE POSTED AT EACH INTERSECTION AND A DETOUR SIGN AND PLAQUE WILL BE POSTED MID-BLOCK.
4. ALL DETOURS SHALL BE MUTCD COMPLIANT.
5. ALL TRAFFIC PLANS SHALL BE SUBMITTED TO THE ENGINEER AND THE CITY FOR APPROVAL BEFORE WORK COMMENCES.
6. ANY WORK THAT IMPACTS PUBLIC BUSING OR PRIVATE BUSING SHALL BE COORDINATED AT LEAST TWO WEEKS AHEAD OF TIME (EX. SCHOOL AND MBTA BUSES).

LEGEND

- TRAFFIC FLOW DIRECTION
- PROPOSED WORK ZONE
- PROPOSED DETOUR ROUTE

ISSUED FOR BID

HDR ENGINEERING, INC.
99 HIGH STREET, SUITE 2300
BOSTON, MASSACHUSETTS 02110–2378
(617) 357–7700

COMMONWEALTH OF MASSACHUSETTS
PHILIP FUSCO
CIVIL
No. 45868
REGISTERED PROFESSIONAL ENGINEER

Scale			
Date			
Job No.			
Designed by			
Drawn by			
Checked by	No.	Description	Date
Approved by	REVISIONS		

THE WORKS — CAMBRIDGE DEPARTMENT OF PUBLIC

Client	CITY OF CAMBRIDGE, MA	Sheet TMP-6.11
Project	RIVER STREET INFRASTRUCTURE AND STREETSCAPE PROJECT	Total Sheets 381
Drawing	**TRAFFIC MANAGEMENT PLANS - DETOUR PLANS (11 OF 14)**	File No.

File: C:\PWWORKINGIEAST01\D07863961\8412R_TR(CNS_DETOUR PLANS).DWG Plotted: 4/19/2022 1:57:18 PM

KELLY ROAD WORK ZONE
(BETWEEN RIVER STREET & PLEASANT STREET)

PLAN

0 80 200 300

SCALE: 1" = 80'

NOTES:
1. DETOURS SHALL BE POSTED WITH "ROAD CLOSED" AND DETOUR SIGNS.
2. DETOUR SIGNS SHALL BE POSTED WITH A STREET NAME PLAQUE OF THE STREET BEING DETOURED.
3. DETOUR SIGNS AND PLAQUES SHALL BE POSTED AT EACH INTERSECTION AND A DETOUR SIGN AND PLAQUE WILL BE POSTED MID-BLOCK.
4. ALL DETOURS SHALL BE MUTCD COMPLIANT.
5. ALL TRAFFIC PLANS SHALL BE SUBMITTED TO THE ENGINEER AND THE CITY FOR APPROVAL BEFORE WORK COMMENCES.
6. ANY WORK THAT IMPACTS PUBLIC BUSING OR PRIVATE BUSING SHALL BE COORDINATED AT LEAST TWO WEEKS AHEAD OF TIME (EX. SCHOOL AND MBTA BUSES).

LEGEND

- TRAFFIC FLOW DIRECTION
- PROPOSED WORK ZONE
- PROPOSED DETOUR ROUTE

ISSUED FOR BID

HDR ENGINEERING, INC.
99 HIGH STREET, SUITE 2300
BOSTON, MASSACHUSETTS 02110–2378
(617) 357–7700

COMMONWEALTH OF MASSACHUSETTS
PHILIP FUSCO
CIVIL
No. 45868
REGISTERED PROFESSIONAL ENGINEER

Scale			
Date			
Job No.			
Designed by			
Drawn by			
Checked by	No.	Description	Date
Approved by	REVISIONS		

CAMBRIDGE DEPARTMENT OF PUBLIC WORKS

Client: CITY OF CAMBRIDGE, MA

Project: RIVER STREET INFRASTRUCTURE AND STREETSCAPE PROJECT

Drawing: **TRAFFIC MANAGEMENT PLANS - DETOUR PLANS (12 OF 14)**

Sheet: TMP-6.12

Total Sheets: 381

File No.:

File: C:\PWWORKING\EAST01\D0786396\8412R_TR(CNS_DETOUR PLANS).DWG Plotted: 5/3/2022 9:22:09 AM

KELLY ROAD WORK ZONE
(BETWEEN PLEASANT STREET & MAGAZINE STREET)

NOTES:
1. DETOURS SHALL BE POSTED WITH "ROAD CLOSED" AND DETOUR SIGNS.
2. DETOUR SIGNS SHALL BE POSTED WITH A STREET NAME PLAQUE OF THE STREET BEING DETOURED.
3. DETOUR SIGNS AND PLAQUES SHALL BE POSTED AT EACH INTERSECTION AND A DETOUR SIGN AND PLAQUE WILL BE POSTED MID-BLOCK.
4. ALL DETOURS SHALL BE MUTCD COMPLIANT.
5. ALL TRAFFIC PLANS SHALL BE SUBMITTED TO THE ENGINEER AND THE CITY FOR APPROVAL BEFORE WORK COMMENCES.
6. ANY WORK THAT IMPACTS PUBLIC BUSING OR PRIVATE BUSING SHALL BE COORDINATED AT LEAST TWO WEEKS AHEAD OF TIME (EX. SCHOOL AND MBTA BUSES).

LEGEND

- TRAFFIC FLOW DIRECTION
- PROPOSED WORK ZONE
- PROPOSED DETOUR ROUTE

PLAN

0 80 200 300

SCALE: 1" = 80'

ISSUED FOR BID

HDR ENGINEERING, INC.
99 HIGH STREET, SUITE 2300
BOSTON, MASSACHUSETTS 02110–2378
(617) 357–7700

COMMONWEALTH OF MASSACHUSETTS
PHILIP FUSCO
CIVIL
No. 45868
REGISTERED PROFESSIONAL ENGINEER

Scale			
Date			
Job No.			
Designed by			
Drawn by			
Checked by	No.	Description	Date
Approved by	REVISIONS		

CAMBRIDGE DEPARTMENT OF PUBLIC THE WORKS

Client	CITY OF CAMBRIDGE, MA	Sheet TMP-6.13
Project	RIVER STREET INFRASTRUCTURE AND STREETSCAPE PROJECT	Total Sheets 381
Drawing	**TRAFFIC MANAGEMENT PLANS - DETOUR PLANS (13 OF 14)**	File No.

File: C:\PWWORKINGIEAST01\D07863961\8412R_TR(CNS_DETOUR PLANS).DWG Plotted: 4/19/2022 1:57:27 PM

KELLY ROAD & PLEASANT STREET
INTERSECTION WORK ZONE

NOTES:
1. DETOURS SHALL BE POSTED WITH "ROAD CLOSED" AND DETOUR SIGNS.
2. DETOUR SIGNS SHALL BE POSTED WITH A STREET NAME PLAQUE OF THE STREET BEING DETOURED.
3. DETOUR SIGNS AND PLAQUES SHALL BE POSTED AT EACH INTERSECTION AND A DETOUR SIGN AND PLAQUE WILL BE POSTED MID-BLOCK.
4. ALL DETOURS SHALL BE MUTCD COMPLIANT.
5. ALL TRAFFIC PLANS SHALL BE SUBMITTED TO THE ENGINEER AND THE CITY FOR APPROVAL BEFORE WORK COMMENCES.
6. ANY WORK THAT IMPACTS PUBLIC BUSING OR PRIVATE BUSING SHALL BE COORDINATED AT LEAST TWO WEEKS AHEAD OF TIME (EX. SCHOOL AND MBTA BUSES).

LEGEND
- TRAFFIC FLOW DIRECTION
- PROPOSED WORK ZONE
- PROPOSED DETOUR ROUTE

PLAN

0 80 200 300

SCALE: 1" = 80'

ISSUED FOR BID

HDR ENGINEERING, INC.
99 HIGH STREET, SUITE 2300
BOSTON, MASSACHUSETTS 02110-2378
(617) 357-7700

COMMONWEALTH OF MASSACHUSETTS
PHILIP FUSCO
CIVIL
No. 45868
REGISTERED PROFESSIONAL ENGINEER

Scale			
Date			
Job No.			
Designed by			
Drawn by			
Checked by	No.	Description	Date
Approved by	REVISIONS		

CAMBRIDGE DEPARTMENT OF PUBLIC WORKS

Client: CITY OF CAMBRIDGE, MA

Project: RIVER STREET INFRASTRUCTURE AND STREETSCAPE PROJECT

Drawing: **TRAFFIC MANAGEMENT PLANS - DETOUR PLANS (14 OF 14)**

Sheet: TMP-6.14

Total Sheets: 381

File No.:

File: C:\PWWORKING\EAST01\D07863961\8412R_TR(CNS_DETOUR PLANS).DWG Plotted: 4/19/2022 1:57:32 PM